Submission Date: 11/03/2019

Assignment 3

1. The Achilles tendon force of $\mathbf{F_t}$ = 650 N is mobilized when the man tries to stand on his toes as shown in **Prob. A3_1**. As this is done, each of his feet is subjected to a reactive force of $\mathbf{N_f}$ = 400 N. Determine the resultant force of $\mathbf{F_t}$ and $\mathbf{N_f}$ about the ankle joint **A**.

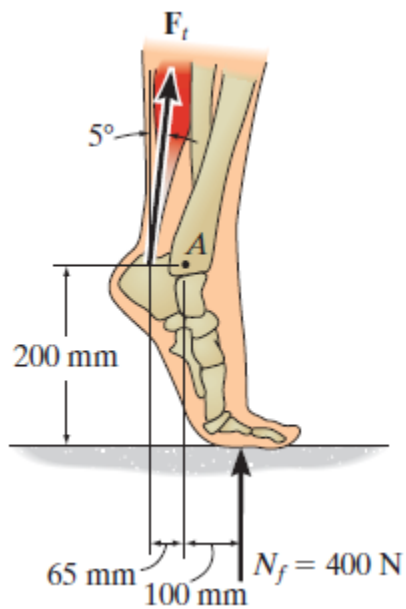

Prob. A3_1

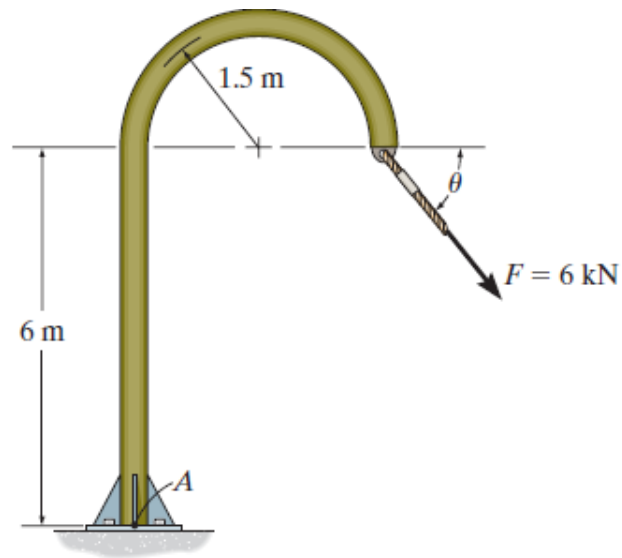

Prob. A3_2

2. The member is subjected to a force of F= 6 kN as shown in **Prob. A3_2.** If Θ = 45°, determine the moment produced by **F** about point A.

3. Use **Prob. A3_3** to answer questions **a, b** and **c**. Express each result as a Cartesian vector.
   a. Determine the moment produced by force $\mathbf{F}_b$ about point *O*.
   b. Determine the moment produced by force $\mathbf{F}_c$ about point *O*.
   c. Determine the resultant moment produced by forces $\mathbf{F}_b$ and $\mathbf{F}_c$ about point *O*.

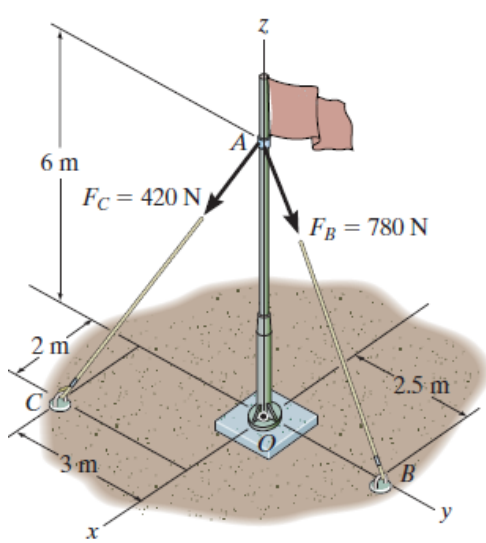

Prob. A3_3

Submission Date: 11/03/2019

Assignment 4

1. Determine the force in each cord for equilibrium of the 200-kg crate in **Prob. A4_1**. Cord *BC* remains horizontal due to the roller at *C*, and *AB* has a length of 1.5 m. Set y = 0.75 m.

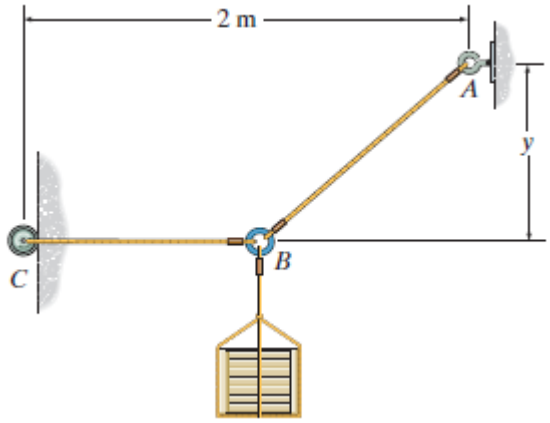

Prob. A4_1

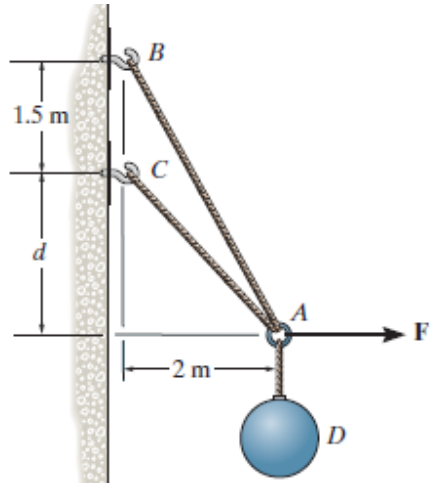

Prob. A4_2

2. Determine the forces in cables *AC* and *AB* needed to hold the 20-kg ball *D* in equilibrium as shown in **Prob. A4_2**. Take F = 300 N and d = 1 m.

3. Determine the tension developed in each wire used to support the 50-kg chandelier in **Prob. A4_3**.

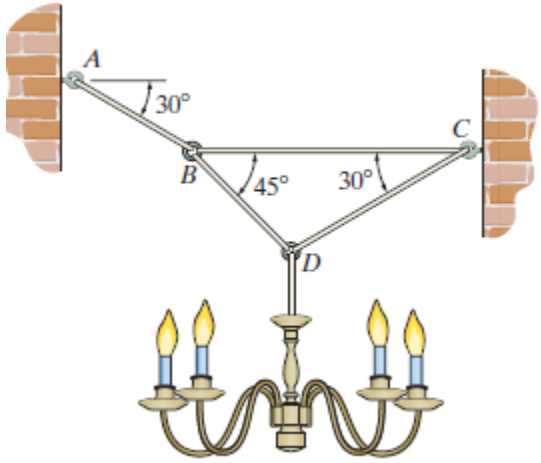

Prob. A4_3