INSTRUCTION: ANSWER ONLY QUESTION THREE (3) FOR SUBMISSION

Submission Date: 30/08/2021

Assignment 4

1. Determine the force in each cord for equilibrium of the 200-kg crate in **Prob. A4_1**. Cord *BC* remains horizontal due to the roller at *C*, and *AB* has a length of 1.5 m. Set y = 0.75 m.

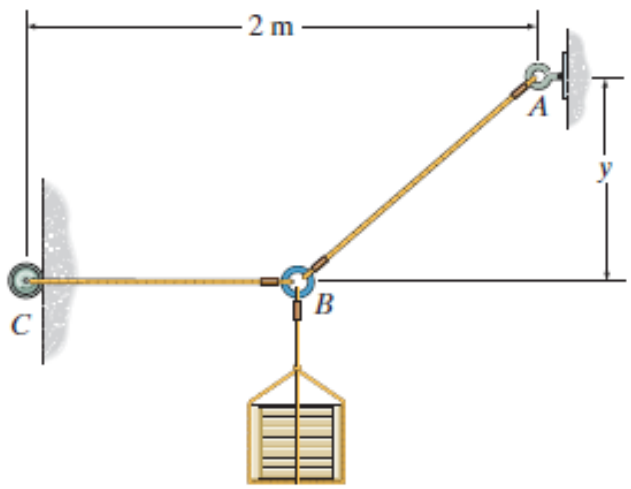

Prob. A4_1

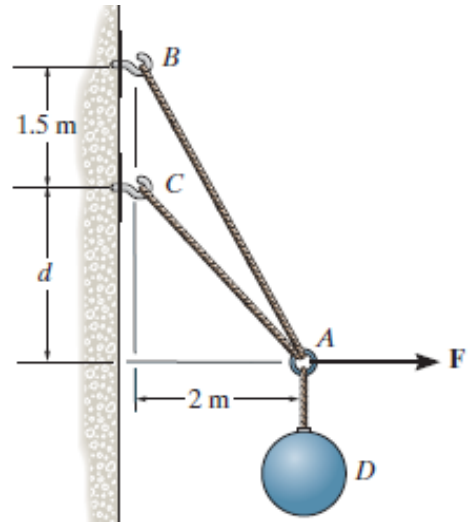

Prob. A4_2

2. Determine the forces in cables *AC* and *AB* needed to hold the 20-kg ball at *D* in equilibrium as shown in **Prob. A4_2**. Take F = 300 N and d = 1 m.

3. Determine the tension developed in each wire used to support the 50-kg chandelier in **Prob. A4_3**.

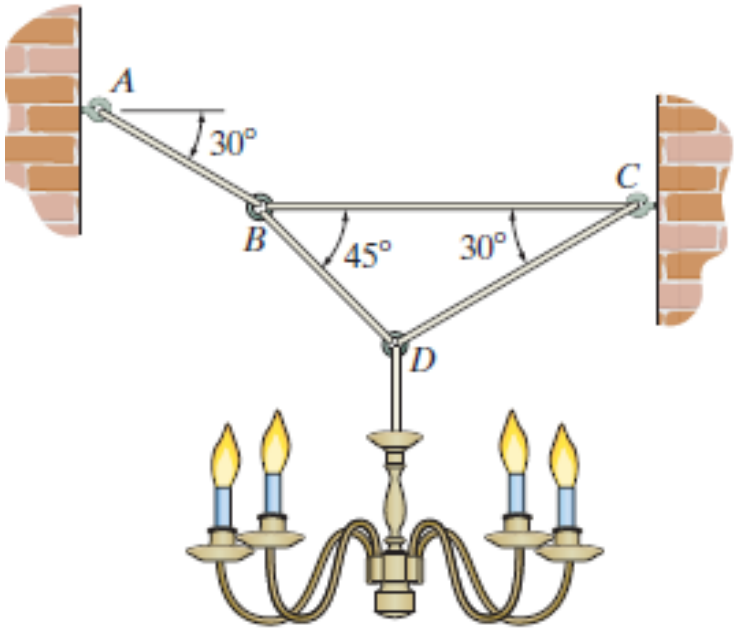

Prob. A4_3