ASSIGNMENT 2

1. The truck is to be towed using two ropes. If the resultant force is to be 950 N, directed along the positive *x* axis, determine the magnitude of forces, $\mathbf{F_A}$ and $\mathbf{F_B}$ acting on each rope and the angle ϴ of F_B so that the magnitude of $\mathbf{F_B}$ is a minimum. $\mathbf{F_A}$ acts at 20° from the *x* axis as shown.

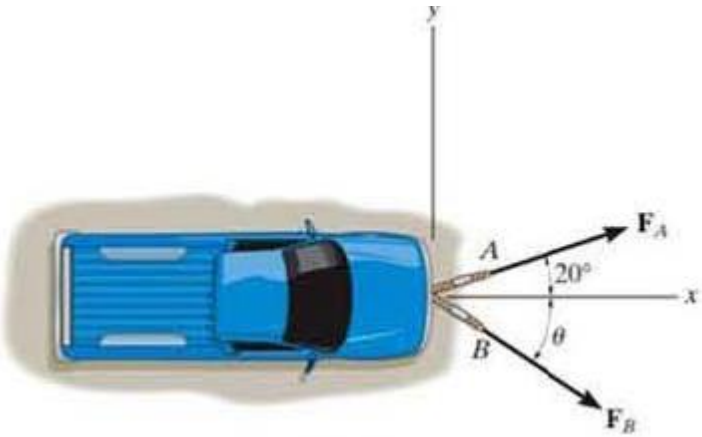

2. Determine the magnitude of the resultant force $\mathbf{F_R = F_1 + F_2}$ and its direction, measured counterclockwise from the positive x axis.

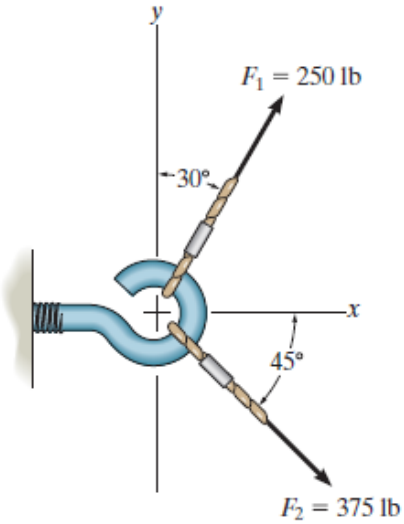

3. Determine the angle ϴ of for connecting member A to the plate so that the resultant force of $\mathbf{F_A}$ and $\mathbf{F_B}$ is directed horizontally to the right. Also, what is the magnitude of the resultant force?

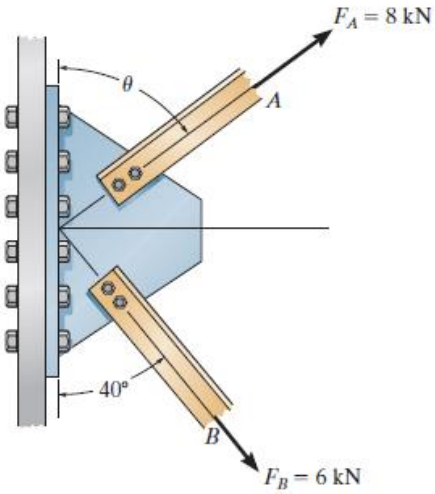

4. The force **F** acts on the bracket within the octant shown. If the magnitudes of the x and z components of **F** are F_x=300 N and F_z=600 N, respectively and β=60°. Determine the magnitude of **F** and its y component. Also, find the coordinate direction angles α and γ.

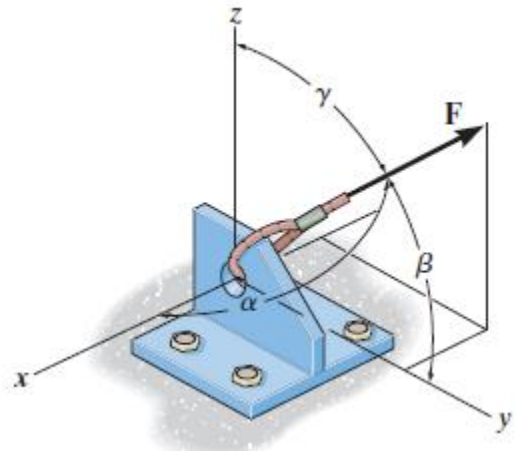
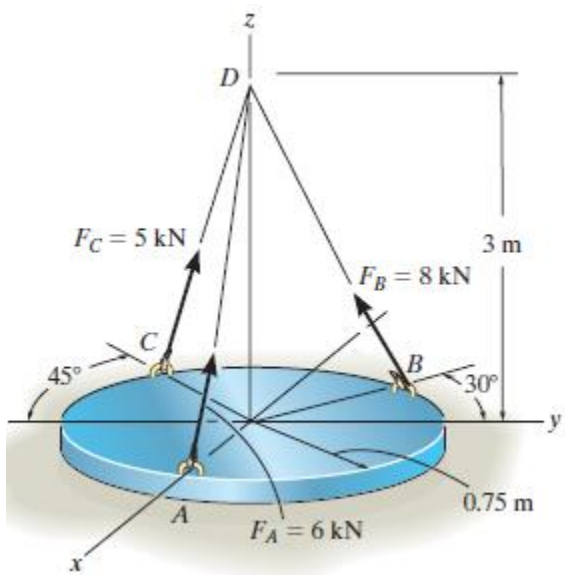
5. The cylindrical plate is subjected to the three cable forces which are concurrent at point D. Express each force which the cables exert on the plate as a Cartesian vector, and determine the magnitude and coordinate direction angles of the resultant force.