BASIC ELECTRONICS

Subject Code: ELN-15/25 **IA marks: 25**
Hours per week : 04 **Exam Hours 03**
Total Hrs: 52 **Exam Marks: 100**

CHAPTER 1

CONDUCTION IN SEMICONDUCTORS

Electrons and holes in an intrinsic semiconductors, conductivity of a semiconductor, carrier concentrations in an intrinsic semiconductor, donor and acceptor impurities, charge densities in a semiconductor, Fermi level in a semiconductor having impurities, diffusion, carrier life time, Hall effect. 05 Hrs.

The branch of engineering which deals with the flow of Electrons through vacuum, gas or semiconductor is called Electronics.

Electronics essentially deals with electronic devices and their utilization.

Atomic Structure

- Atom is the basic building block of all the elements. It consists of the central nucleus of positive charge around which small negatively charged particles called electrons revolve in different paths or orbits.

- An Electrostatic force of attraction between electrons and the nucleus holds up electrons in different orbits.

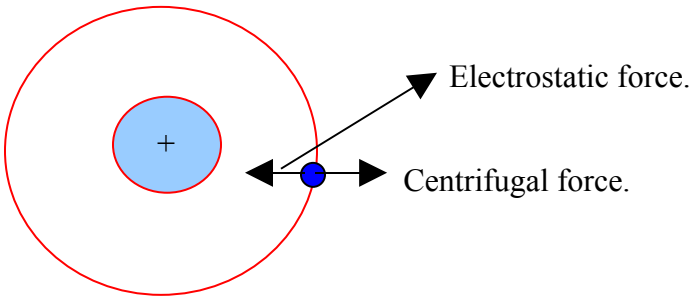

Figure1.1. Atomic structure

- Nucleus is the central part of an atom and contains protons and neutrons. A proton is positively charged particle, while the neutron has the same mass as the proton, but has no charge. Therefore ,nucleus of an atom is positively charged.

- **atomic weight = no. of protons + no. of neutrons**

- An electron is a negatively charged particle having negligible mass. The charge on an electron is equal but opposite to that on a proton. Also the number of electrons is equal to the number of protons in an atom under ordinary conditions. Therefore an atom is neutral as a whole.

- **atomic number = no. of protons or electrons in an atom**

- The number of electrons in any orbit is given by $2n^2$ where n is the number of the orbit.

  For example, I orbit contains $2x1^2$ =2 electrons

  II orbit contains $2x2^2$ = 8 electrons

  III orbit contains $2x3^2$ = 18 electrons and so on

- The last orbit cannot have more than 8 electrons.

- The last but one orbit cannot have more than 18 electrons.

Positive and negative ions

- Protons and electrons are equal in number hence if an atom loses an electron it has lost negative charge therefore it becomes positively charged and is referred as positive ion.

- If an atom gains an electron it becomes negatively charged and is referred to as negative ion.

Valence electrons

The electrons in the outermost orbit of an atom are known as valence electrons.

- The outermost orbit can have a maximum of 8 electrons.

- The valence electrons determine the physical and chemical properties of a material.

- When the number of valence electrons of an atom is less than 4, the material is usually a metal and a conductor. Examples are sodium, magnesium and aluminium, which have 1,2 and 3 valence electrons respectively.

- When the number of valence electrons of an atom is more than 4, the material is usually a non-metal and an insulator. Examples are nitrogen, sulphur and neon, which have 5,6 and 8 valence electrons respectively.

- When the number of valence electrons of an atom is 4 the material has both metal and non-metal properties and is usually a semi-conductor. Examples are carbon, silicon and germanium.

Free electrons

- The valence electrons of different material possess different energies. The greater the energy of a valence electron, the lesser it is bound to the nucleus.

- In certain substances, particularly metals, the valence electrons possess so much energy that they are very loosely attached to the nucleus.

- The loosely attached valence electrons move at random within the material and are called free electrons.

The valence electrons, which are loosely attached to the nucleus, are known as free electrons.

Energy bands

- In case of a single isolated atom an electron in any orbit has definite energy.

- When atoms are brought together as in solids, an atom is influenced by the forces from other atoms. Hence an electron in any orbit can have a range of energies rather than single energy. These range of energy levels are known as Energy bands.

- Within any material there are two distinct energy bands in which electrons may exist viz Valence band and conduction band.

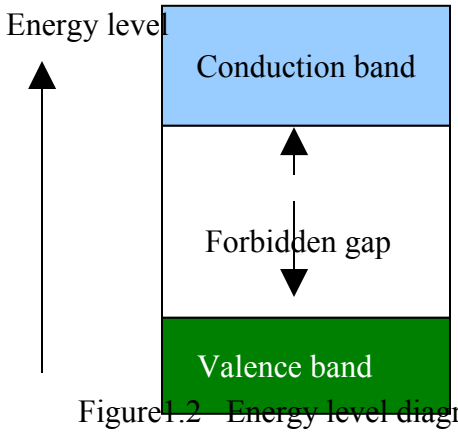

Figure1.2 Energy level diagram

- ***The range of energies possessed by valence electrons is called valence band.***
- ***The range of energies possessed by free electrons is called conduction band.***
- ***Valence band and conduction band are separated by an energy gap in which no electrons normally exist this gap is called forbidden gap.***

Electrons in conduction band are either escaped from their atoms (free electrons) or only weakly held to the nucleus. Thereby by the electrons in conduction band may be easily moved around within the material by applying relatively small amount of energy. (either by increasing the temperature or by focusing light on the material etc.) This is the reason why the conductivity of the material increases with increase in temperature.

But much larger amount of energy must be applied in order to extract an electron from the valence band because electrons in valence band are usually in the normal orbit around a nucleus. For any given material, the forbidden gap may be large, small or non-existent.

Classification of materials based on Energy band theory

Based on the width of the forbidden gap, materials are broadly classified as conductors, Insulators and semiconductors.

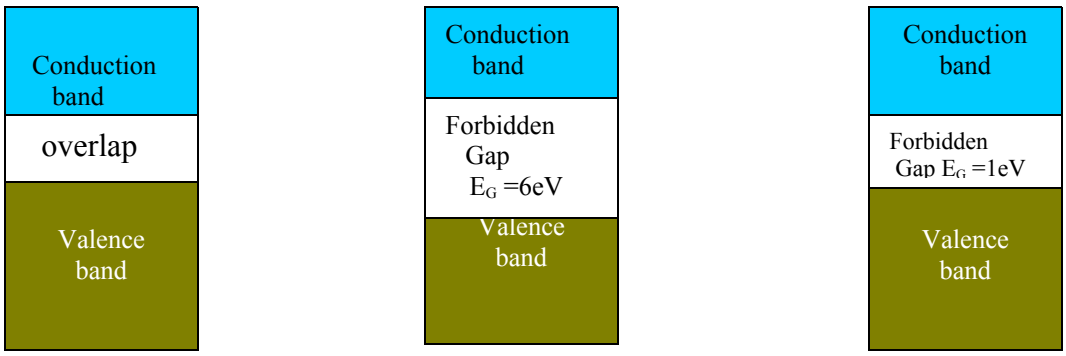

(a) Conductor (b) Insulator (c) Semiconductor

Conductors

- Conductors are those substances, which allow electric current to pass through them.
  Example: Copper, Al, salt solutions, etc.

- In terms of energy bands, conductors are those substances in which there is no forbidden gap. Valence and conduction band overlap as shown in fig (a).

- For this reason, very large number of electrons are available for conduction even at extremely low temperatures. Thus, conduction is possible even by a very weak electric field.

Insulators

- Insulators are those substances, which do not allow electric current to pass through them.
  Example: Rubber, glass, wood etc.

- In terms of energy bands, insulators are those substances in which the forbidden gap is very large.

- Thus valence and conduction band are widely separated as shown in fig (b). Therefore insulators do not conduct electricity even with the application of a large electric field or by heating or at very high temperatures.

Semiconductors

- Semiconductors are those substances whose conductivity lies in between that of a conductor and Insulator.
  Example: Silicon, germanium, Cealenium, Gallium, arsenide etc.

- In terms of energy bands, semiconductors are those substances in which the forbidden gap is narrow.

- Thus valence and conduction bands are moderately separated as shown in fig(C).

- In semiconductors, the valence band is partially filled, the conduction band is also partially filled, and the energy gap between conduction band and valence band is narrow.

- Therefore, comparatively smaller electric field is required to push the electrons from valence band to conduction band . At low temperatures the valence band is completely filled and conduction band is completely empty. Therefore, at very low temperature a semi-conductor actually behaves as an insulator.

Conduction in solids

- Conduction in any given material occurs when a voltage of suitable magnitude is applied to it, which causes the charge carriers within the material to move in a desired direction.

- This may be due to electron motion or hole transfer or both.

Electron motion

Free electrons in the conduction band are moved under the influence of the applied electric field. Since electrons have negative charge they are repelled by the negative terminal of the applied voltage and attracted towards the positive terminal.

Hole transfer

- Hole transfer involves the movement of holes.
- Holes may be thought of positive charged particles and as such they move through an electric field in a direction opposite to that of electrons.

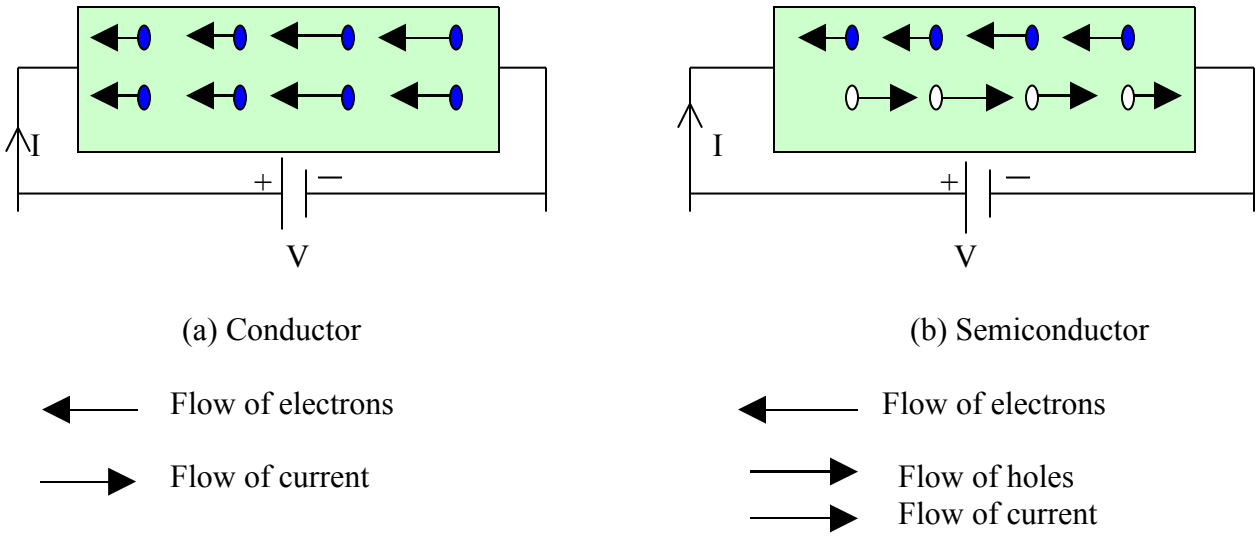

(a) Conductor (b) Semiconductor

- In a good conductor (metal) as shown in fig (a) the current flow is due to free electrons only.

- In a semiconductor as shown in fig (b). The current flow is due to both holes and electrons moving in opposite directions.

- The unit of electric current is Ampere (A) and since the flow of electric current is constituted by the movement of electrons in conduction band and holes in valence band, electrons and holes are referred as charge carriers.

Classification of semiconductors

Semiconductors are classified into two types.

a) Intrinsic semiconductors.

b) Extrinsic semiconductors.

a) Intrinsic semiconductors

- ***A semiconductor in an extremely pure form is known as Intrinsic semiconductor.***

  Example: Silicon, germanium.

- Both silicon and Germanium are tetravalent (having 4 valence electrons).

- Each atom forms a covalent bond or electron pair bond with the electrons of neighboring atom. The structure is shown below.

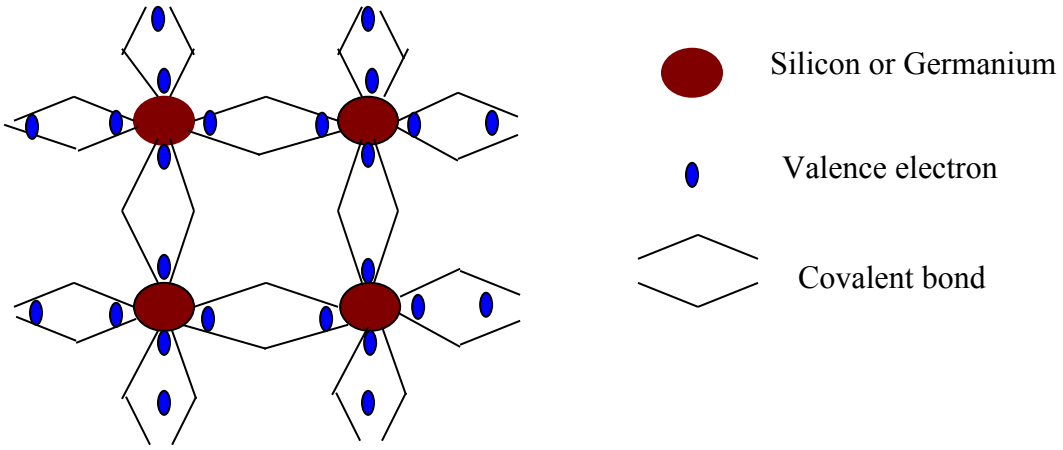

Figure1.3. Crystalline structure of Silicon (or Germanium)

At low temperature

- At low temperature, all the valence electrons are tightly bounded the nucleus hence no free electrons are available for conduction.

- The semiconductor therefore behaves as an Insulator at absolute zero temperature.

At room temperature

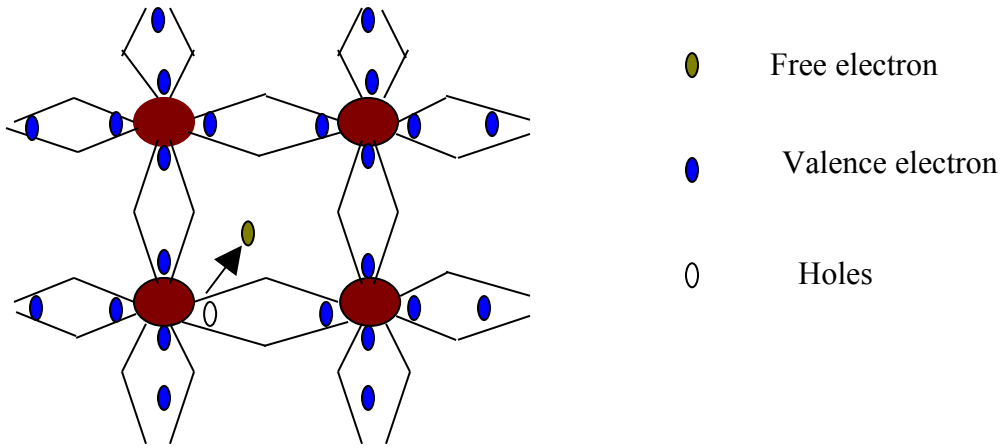

Figure 1.4. Crystalline structure of Silicon (or Germanium) at room temperature

- At room temperature, some of the valence electrons gain enough thermal energy to break up the covalent bonds.
- This breaking up of covalent bonds sets the electrons free and are available for conduction.
- When an electron escapes from a covalent bond and becomes free electrons a vacancy is created in a covalent bond as shown in figure above. Such a vacancy is called Hole. It carries positive charge and moves under the influence of an electric field in the direction of the electric field applied.
- Numbers of holes are equal to the number of electrons since, a hole is nothing but an absence of electrons.

Extrinsic Semiconductor

- When an impurity is added to an Intrinsic semiconductor its conductivity changes.
- This process of adding impurity to a semiconductor is called Doping and the impure semiconductor is called extrinsic semiconductor.
- Depending on the type of impurity added, extrinsic semiconductors are further classified as n-type and p-type semiconductor.

n-type semiconductor

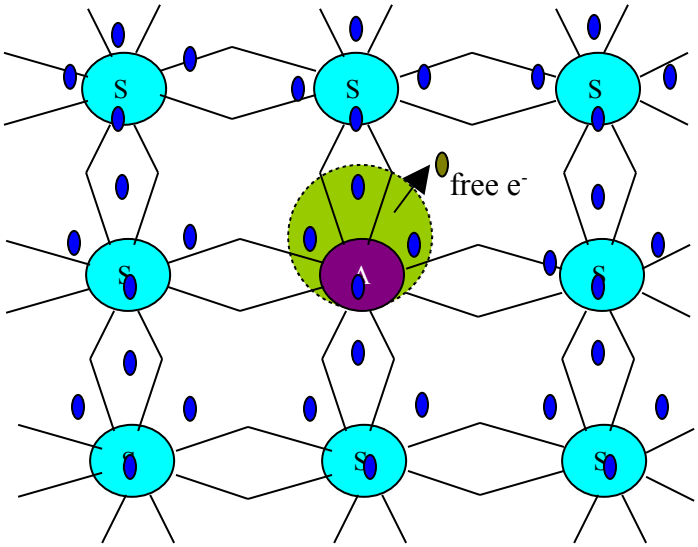

Figure 1.5 n-type semiconductor

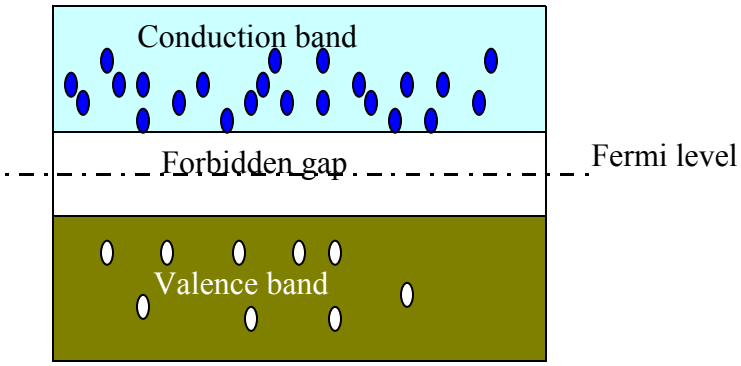

Figure1.6 Energy band diagram for n-type semiconductor

- **When a small current of Pentavalent impurity is added to a pure semiconductor it is called as n-type semiconductor.**

- Addition of Pentavalent impurity provides a large number of free electrons in a semiconductor crystal.

- Typical example for pentavalent impurities are Arsenic, Antimony and Phosphorus etc. Such impurities which produce n-type semiconductors are known as Donor impurities because they donate or provide free electrons to the semiconductor crystal.

- To understand the formation of n-type semiconductor, consider a pure silicon crystal with an impurity say arsenic added to it as shown in figure 1.5.
- We know that a silicon atom has 4 valence electrons and Arsenic has 5 valence electrons. When Arsenic is added as impurity to silicon, the 4 valence electrons of silicon make co-valent bond with 4 valence electrons of Arsenic.

- The 5th Valence electrons finds no place in the covalent bond thus, it becomes free and travels to the conduction band as shown in figure. Therefore, for each arsenic atom added, one free electron will be available in the silicon crystal. Though each arsenic atom provides one free electrons yet an extremely small amount of arsenic impurity provides enough atoms to supply millions of free electrons.

Due to thermal energy, still hole election pairs are generated but the number of free electrons are very large in number when compared to holes. So in an n-type semiconductor electrons are majority charge carriers and holes are minority charge carriers . Since the current conduction is pre-dominantly by free electrons(-vely charges) it is called as n-type semiconductor(n- means –ve).

p-type semiconductor

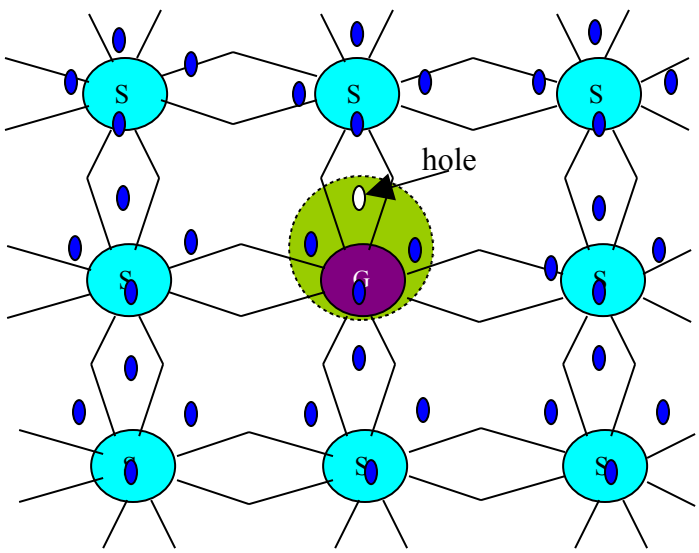

Figure 1.7 p-type semiconductor

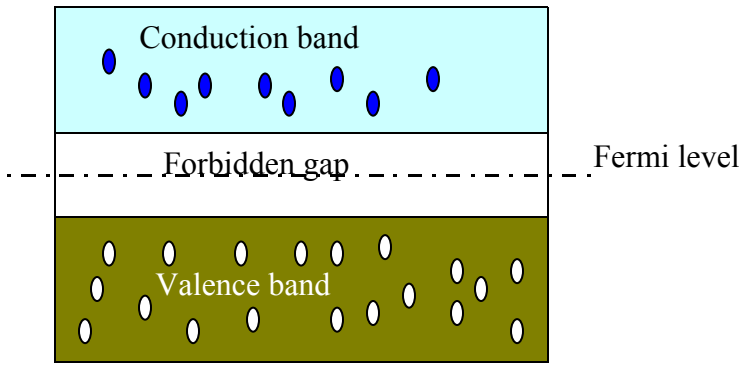

Figure 1.8 Energy band diagram for p-type semiconductor

- **When a small amount of trivalent impurity is added to a pure semiconductor it is called p-type semiconductor.**

- The addition of trivalent impurity provides large number of holes in the semiconductor crystals.

- Example: Gallium, Indium or Boron etc. Such impurities which produce p-type semiconductors are known as acceptor impurities because the holes created can accept the electrons in the semi conductor crystal.

To understand the formation of p-type semiconductor, consider a pure silicon crystal with an impurity say gallium added to it as shown in figure 1.7.

- We know that silicon atom has 4 valence electrons and Gallium has 3 electrons. When Gallium is added as impurity to silicon, the 3 valence electrons of gallium make 3 covalent bonds with 3 valence electrons of silicon.

- The 4th valence electrons of silicon cannot make a covalent bond with that of Gallium because of short of one electron as shown above. This absence of electron is called a hole. Therefore for each gallium atom added one hole is created, a small amount of Gallium provides millions of holes.

Due to thermal energy, still hole-electron pairs are generated but the number of holes are very large compared to the number of electrons. Therefore, in a p-type semiconductor holes are majority carriers and electrons are minority carriers. Since the current conduction is predominantly by hole(+ charges) it is called as p-type semiconductor(p means +ve)

Drift and Diffusion current

The flow of current through a semiconductor material is normally referred to as one of the two types.

Drift current

- If an electron is subjected to an electric field in free space it will accelerate in a straight line form the –ve terminal to the + ve terminal of the applied voltage.

- However in the case of conductor or semiconductor at room temperature, a free electrons under the influence of electric field will move towards the +ve terminal of the applied voltage but will continuously collide with atoms all the ways as shown in figure 1.9.

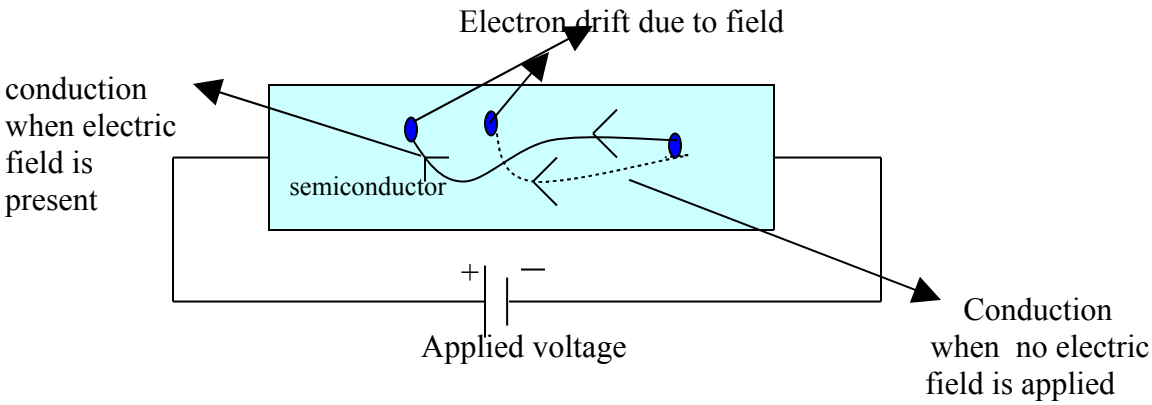

Figure 1.9

- Each time, when the electron strikes an atom, it rebounds in a random direction but the presence of electric field doesnot stop the collisions and random motion. As a result the electrons drift in a direction of the applied electric field.

- The current produced in this way is called as Drift current and it is the usual kind of current flow that occurs in a conductor.

Diffusion current

- ***The directional movement of charge carriers due to their concentration gradient produces a component of current known as Diffusion current.***

- The mechanism of transport of charges in a semiconductor when no electric field is applied called diffusion. It is encountered only in semiconductors and is normally absent in conductors.

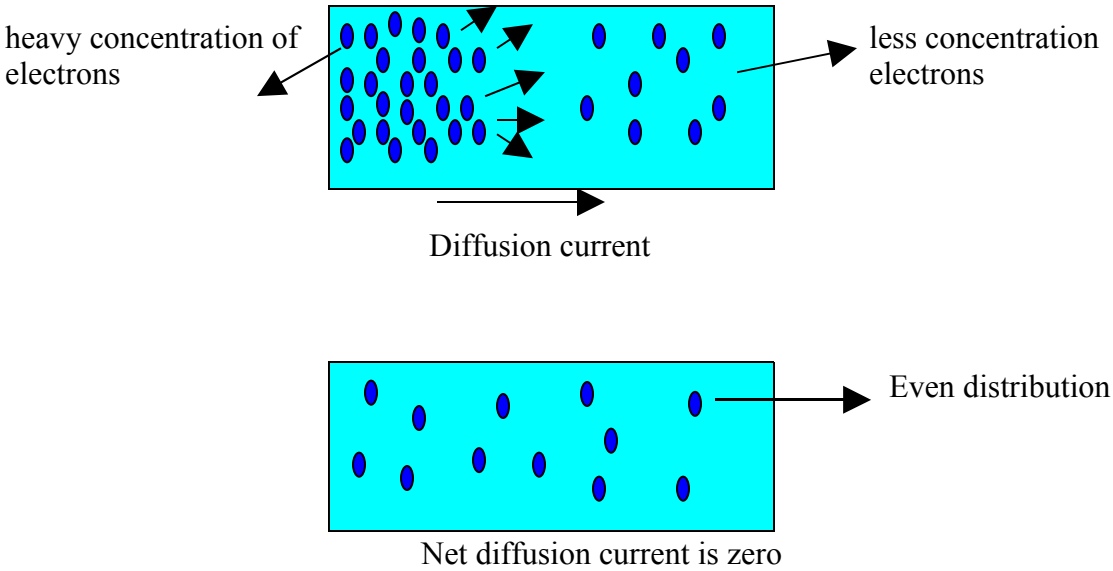

- With no applied voltage if the number of charge carriers (either holes or electrons) in one region of a semiconductor is less compared to the rest of the region then there exist a concentration gradient.

- Since the charge carriers are either all electrons or all holes they sine polarity of charge and thus there is a force of repulsion between them.

- As a result, the carriers tend to move gradually or diffuse from the region of higher concentration to the region of lower concentration. This process is called diffusion and electric current produced due to this process is called diffusion current.

- This process continues until all the carriers are evenly distributed through the material. Hence when there is no applied voltage, the net diffusion current will be zero.

Fermi-level

Fermi level indicates the level of energy in the forbidden gap.

1. **Fermi-level for an Intrinsic semiconductor**

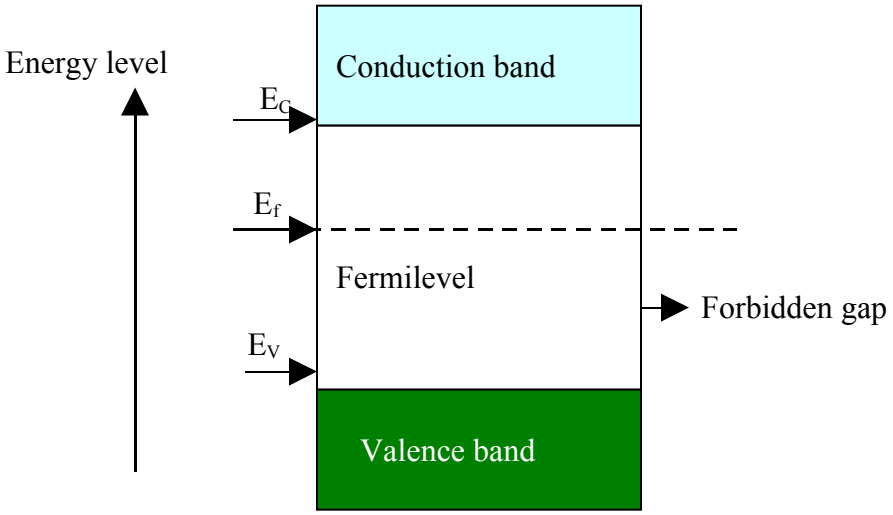

E_C → Conduction band energy level

E_V → Valence band energy level

E_f → fermi level

- We know that the Intrinsic semiconductor acts as an insulator at absolute zero temperature because there are free electrons and holes available but as the temperature increases electron hole pairs are generated and hence number of electrons will be equal to number of holes.

- Therefore, the possibility of obtaining an electron in the conduction band will be equal to the probability of obtaining a hole in the valence band.

- If Ec is the lowest energy level of Conduction band and Ev is the highest energy level of the valence band then the fermi level E_f is exactly at the center of these two levels as shown above.

2. Fermi-level in a semiconductors having impurities (Extrinsic)

a) Fermi-level for n-type Semiconductor

- Let a donar impurity be added to an Intrinsic semiconductor then the donar energy level (E_D) shown by the dotted lines is very close to conduction band energy level (E_c).

- Therefore the unbonded valence electrons of the impurity atoms can very easily jump into the conduction band and become free electros thus, at room temperature almost all the extra electrons of pentavalent impurity will jump to the conduction band.

- The donar energy level (E_D) is just below conduction band level (Ec) as shown in figure1.10(a). Due to a large number of free electrons, the probability of electrons occupying the energy level towards the conduction band will be more hence, fermi level shifts towards the conduction band.

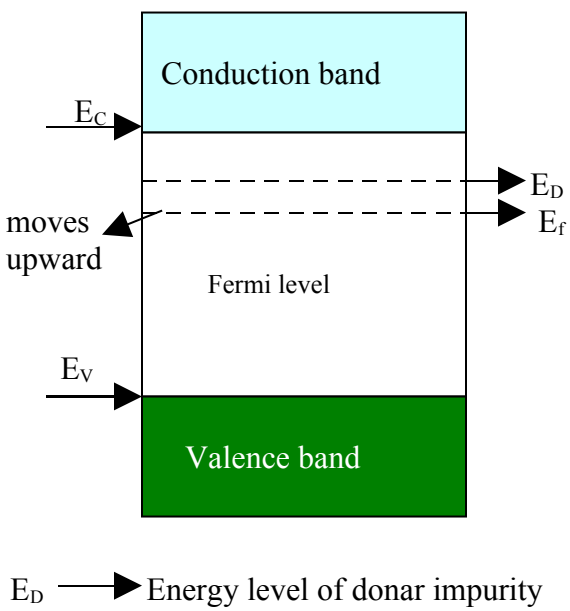

Figure 1.10 (a) Energy level diagram for n-type semiconductor

b) Fermi-level for P-type semiconductor

- Let an acceptor impurity be added to an Intrinsic semiconductor then the acceptor energy level (Ea) shown by dotted lines is very close to the valence band shown by dotted lines is very close to the valence band energy level (Ev).

- Therefore the valence band electrons of the impurity atom can very easily jump into the valence band thereby creating holes in the valence band.

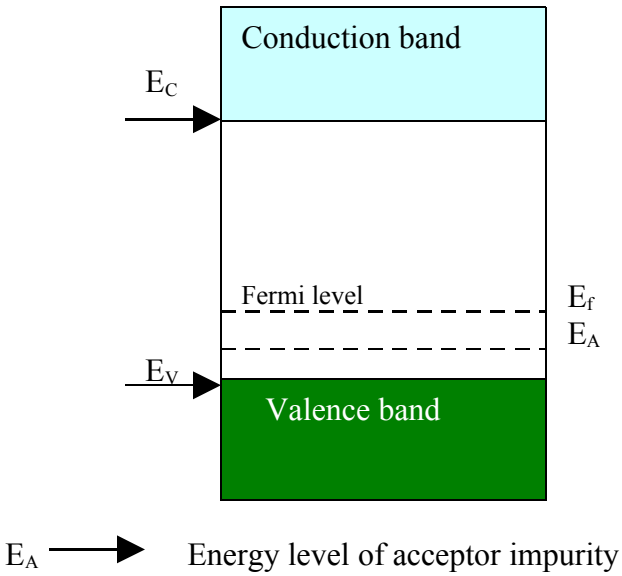

Figure 1.11 (b) Energy level diagram for P-type semiconductor

- The acceptor energy level (E_A) is just above the valence band level as shown in figure 1.11 (b).

- Due to large number of holes the probability of holes occupying the energy level towards the valence band will be more and hence, the fermi level gets shifted towards the valence band.

HALL EFFECT

If a piece of metal or semiconductor carrying a current I is placed in a transverse magnetic field B then an electric field E is induced in the direction perpendicular to both I and B. This phenomenon is known as Hall effect.

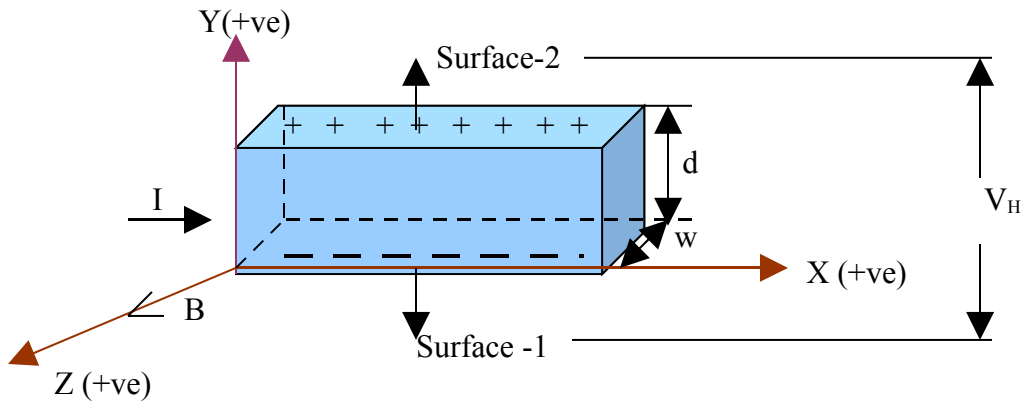

Hall effect is normally used to determine whether a semi-conductor is n-type or p-type.

To find whether the semiconductor is n-type or p-type

i) In the figure. above, If I is in the +ve X direction and B is in the +ve Z direction, then a force will be exerted on the charge carriers (holes and electrons) in the –ve Y direction.

ii) This force is independent of whether the charge carriers are electrons or holes. Due to this force the charge carriers (holes and electrons) will be forced downward towards surface –1 as shown.

iii) If the semiconductor is N-type, then electrons will be the charge carriers and these electrons will accumulate on surface –1 making that surface –vely charged with respect to surface –2. Hence a potential called Hall voltage appears between the surfaces 1 and 2.

iv) Similarly when surface –1 is positively charged with respect to surface –2, then the semiconductor is of P-type. In this way, by seeing the polarity of Hall voltage we can determine whether the semiconductor is of P-type or N-type.

Applications of Hall effect

Hall effect is used to determine,

- carrier concentration, conductivity and mobility.
- The sign of the current carrying charge.
- Charge density.
- It is used as magnetic field meter.

Carrier lifetime (τ)

In a pure semiconductor, we know that number of holes are equal to the number of electrons. Thermal agitation however, continues to produce new hole electron pairs while other hole-electron pair disappear as a result of recombination.

On an average, a hole will exist for $\boldsymbol{\tau}_p$ second and an electron will exist for $\boldsymbol{\tau}_n$ second before recombination. This time is called the carrier lifetime or Mean lifetime.

The average time an electron or hole can exist in the free state is called carrier lifetime.

CHAPTER 2

SEMICONDUCTOR DIODE

When a p-type semiconductor material is suitably joined to n-type semiconductor the contact surface is called a p-n junction. The p-n junction is also called as semiconductor diode.

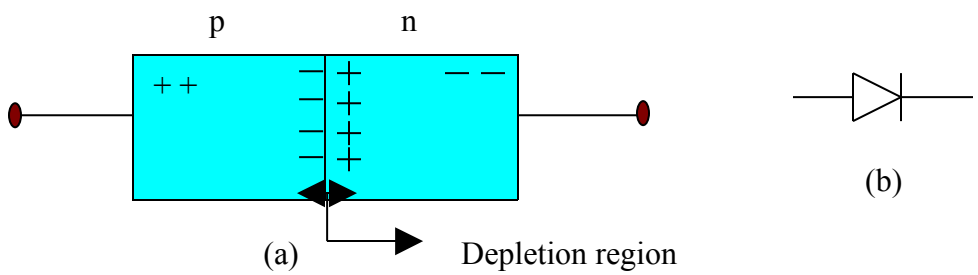

Fig. 2.0 (a) p-n junction **Fig 2.0 (b) symbolic representation**

- The left side material is a p-type semiconductor having –ve acceptor ions and +vely charged holes. The right side material is n-type semiconductor having +ve donor ions and free electrons.

- Suppose the two pieces are suitably treated to form pn junction, then there is a tendency for the free electrons from n-type to diffuse over to the p-side and holes from p-type to the n-side . This process is called **diffusion.**

- As the free electrons move across the junction from n-type to p-type, +ve donor ions are uncovered. Hence a +ve charge is built on the n-side of the junction. At the same time, the free electrons cross the junction and uncover the –ve acceptor ions by filling in the holes. Therefore a net –ve charge is established on p-side of the junction.

- When a sufficient number of donor and acceptor ions is uncovered further diffusion is prevented.

- Thus a barrier is set up against further movement of charge carriers. This is called potential barrier or junction barrier Vo. The potential barrier is of the order of 0.1 to 0.3V.

Note: outside this barrier on each side of the junction, the material is still neutral. Only inside the barrier, there is a +ve charge on n-side and –ve charge on p-side. This region is called depletion layer.

2.1 Biasing: Connecting a p-n junction to an external d.c. voltage source is called

biasing.

1. Forward biasing
2. Reverse biasing

1. Forward biasing

- When external voltage applied to the junction is in such a direction that it cancels the potential barrier, thus permitting current flow is called forward biasing.

- To apply forward bias, connect +ve terminal of the battery to p-type and –ve terminal to n-type as shown in fig.2.1 below.

- The applied forward potential establishes the electric field which acts against the field due to potential barrier. Therefore the resultant field is weakened and the barier height is reduced at the junction as shown in fig. 2.1.

- Since the potential barrier voltage is very small, a small forward voltage is sufficient to completely eliminate the barrier. Once the potential barrier is eliminated by the forward voltage, junction resistance becomes almost zero and a low resistance path is established for the entire circuit. Therefore current flows in the circuit. This is called forward current.

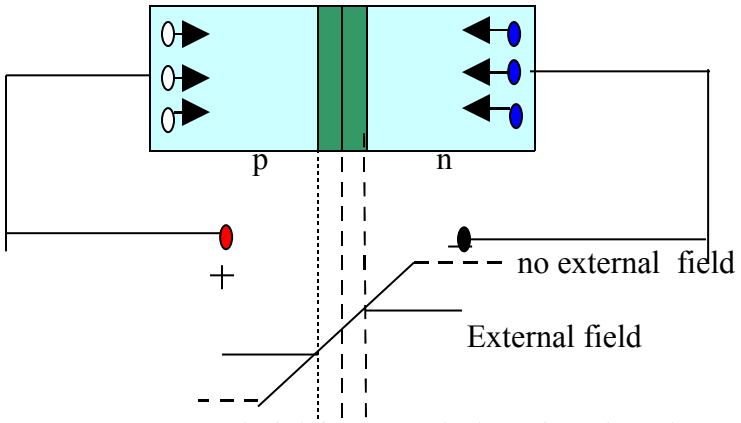

Fig.2.1 forward biasing of p-n junction

2. Reverse biasing

- When the external voltage applied to the junction is in such a direction the potential barrier is increased it is called reverse biasing.

- To apply reverse bias, connect –ve terminal of the battery to p-type and +ve terminal to n-type as shown in figure below.

- The applied reverse voltage establishes an electric field which acts in the same direction as the field due to potential barrier. Therefore the resultant field at the junction is strengthened and the barrier height is increased as shown in fig.2.2.

- The increased potential barrier prevents the flow of charge carriers across the junction. Thus a high resistance path is established for the entire circuit and hence current does not flow.

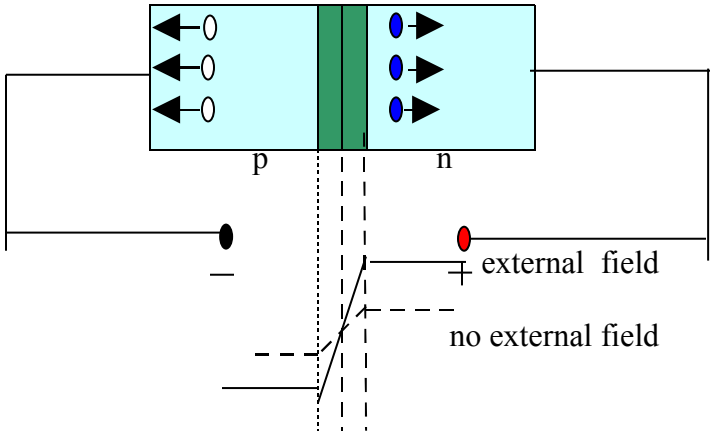

Fig.2.2 Reverse biasing of p-n junction

2.2 Volt- Ampere characteristics(V-I)

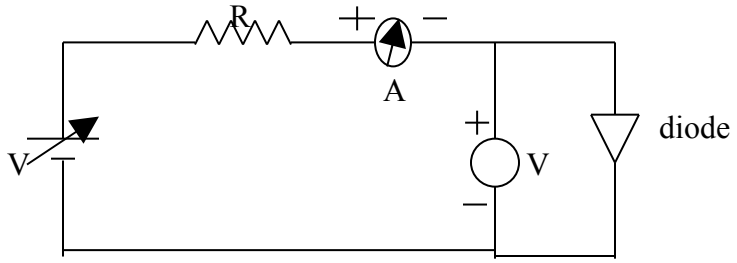

(i)

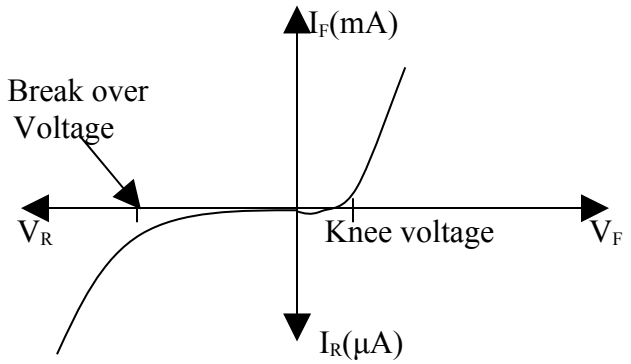

(ii)

Fig. 2.3 V-I characteristics of p-n junction diode.
(i) Circuit diagram
(ii) Characteristics

- The V-I characteristics of a semiconductor diode can be obtained with the help of the circuit shown in fig. 2.3 (i)

- The supply voltage V is a regulated power supply, the diode is forward biased in the circuit shown. The resistor R is a current limiting resistor. The voltage across the diode is measured with the help of voltmeter and the current is recorded using an ammeter.

- By varying the supply voltage different sets of voltage and currents are obtained. By plotting these values on a graph, the forward characteristics can be obtained. It can be noted from the graph the current remains zero till the diode voltage attains the barrier potential.

- For silicon diode, the barrier potential is 0.7 V and for Germanium diode, it is 0.3 V. The barrier potential is also called as knee voltage or cur-in voltage.

- The reverse characteristics can be obtained by reverse biasing the diode. It can be noted that at a particular reverse voltage, the reverse current increases rapidly. This voltage is called breakdown voltage.

2.3 Diode current equation

The current in a diode is given by the diode current equation

$$I = I_0(e^{V/\eta V_T} - 1)$$

Where, I------ diode current
I_0------ reverse saturation current
V------ diode voltage
η------- semiconductor constant
=1 for Ge, 2 for Si.
V_T------ Voltage equivalent of temperature= T/11,600 (Temperature T is in Kelvin)

Note----- If the temperature is given in ^{0}C then it can be converted to Kelvin by the help of following relation, ^{0}C+273 = K

2.4 Diode equivalent circuit

It is generally profitable to replace a device or system by its equivalent circuit. Once the device is replaced by its equivalent circuit, the resulting network can be solved by traditional circuit analysis technique.

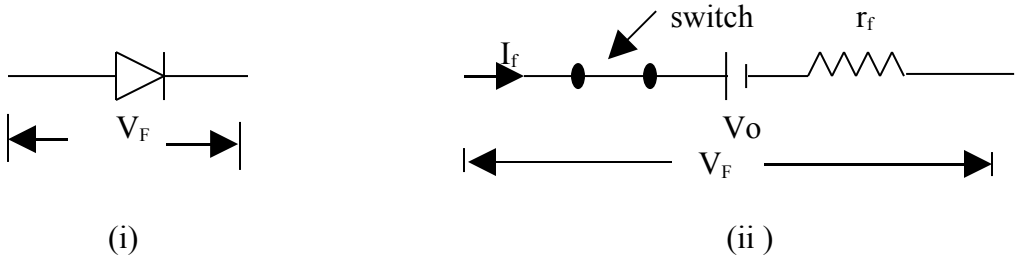

Fig.2.4 Diode equivalent circuit. (i) symbol (ii) equivalent circuit

The forward current I_f flowing through the diode causes a voltage drop in its internal resistance r_f. Therefore the forward voltage V_F applied across the actual diode has to overcome

1. potential barrier Vo
2. internal drop $I_f r_f$

$$\mathbf{V_f = Vo + I_f r_f}$$

For silicon diode Vo=0.7V whereas for Germanium diode Vo = 0.3 V.
For ideal diode r_f =0.

24.1 Basic Definitions

1.Knee voltage or Cut-in Voltage.
It is the forward voltage at which the diode starts conducting.

2. Breakdown voltage
It is the reverse voltage at which the diode (p-n junction) breaks down with sudden rise in reverse current.

3. Peak-inverse voltage (PIV)
It is the max. reverse voltage that can be applied to a p-n junction without causing damage to the junction.

If the reverse voltage across the junction exceeds its peak-inverse voltage, then the junction exceeds its Peak-inverse voltage, then the junction gets destroyed because of excessive heat. In rectification, one thing to be kept in mind is that care should be taken that reverse voltage across the diode during –ve half cycle of a.c. doesnot exceed the peak-inverse voltage of the diode.

4. Maximum Forward current
It is the Max. instantaneous forward current that a p-n junction can conduct without damaging the junction. If the forward current is more than the specified rating then the junction gets destroyed due to over heating.

5.Maximum Power rating
It is the maximum power that can be dissipated at the junction without damaging it. The power dissipated across the junction is equal to the product of junction current and the voltage across the junction.

2.5 RECTIFIERS

"Rectifiers are the circuit which converts ac to dc"

Rectifiers are grouped into tow categories depending on the period of conductions.

1. Half-wave rectifier
2. Full- wave rectifier.

2.5.1 Half-wave rectifier

The circuit diagram of a half-wave rectifier is shown in fig. 2.5 below along with the I/P and O/P waveforms.

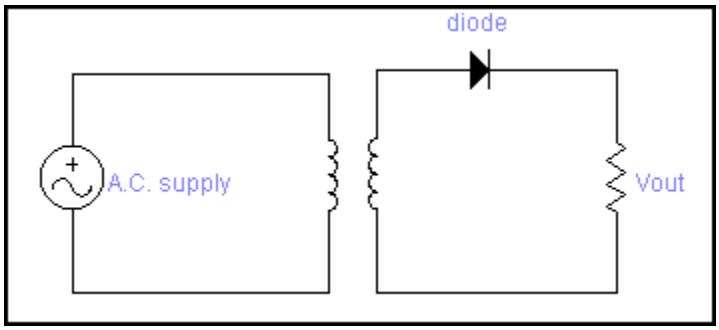

(i)

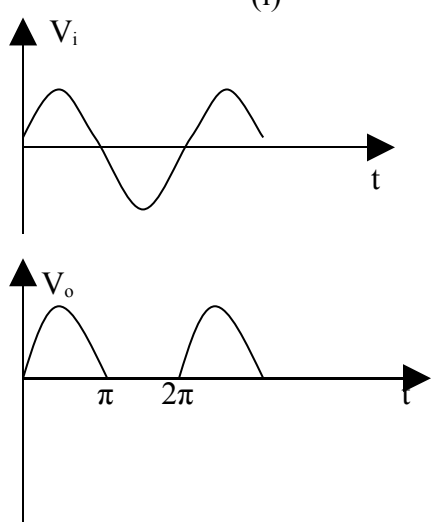

(ii)

Fig. 2.5 Half wave rectifier (i) Circuit diagram (ii) waveforms

- The transformer is employed in order to step-down the supply voltage and also to prevent from shocks.

- The diode is used to rectify the a.c. signal while , the pulsating d.c. is taken across the load resistor R_L.

- During the +ve half cycle, the end X of the secondary is +ve and end Y is -ve . Thus , forward biasing the diode. As the diode is forward biased, the current flows through the load R_L and a voltage is developed across it.

- During the –ve half-cycle the end Y is +ve and end X is –ve thus, reverse biasing the diode. As the diode is reverse biased there is no flow of current through R_L thereby the output voltage is zero.

2.5.2 Efficiency of a rectifier

The ratio of d.c. power to the applied imp ac power is known as rectifier efficiency.

$$\textbf{Rectifier efficiency } \eta = \frac{d.c.power.output}{input.a.c.power}$$

2.5.3Derivation of rectifier efficiency of Half wave rectifier

Let $V = V_m \sin\theta$ be the voltage across the secondary winding

r_f = diode resistance

R_L = load resistance

d.c. power

$$I_{av} = I_{dc} = \frac{1}{2\pi}\int_0^{\pi} i.d\theta = \frac{1}{2\pi}\int_0^{\pi} \frac{VmSin\theta}{r_L + R_L} d\theta$$

$$= \frac{Vm}{2\pi\,(r_f + R_L)}\int_0^{\pi} Sin\theta\, d\theta$$

$$= \frac{2Vm}{2\pi\,(r_f + R_L)} = \frac{\text{Im}}{\pi}$$

d.c. power $P_{dc} = I^2_{dc} * R_L$

$$= \left(\frac{\text{Im}}{\pi}\right)^2 * R_L \qquad \text{----------} \quad (1)$$

a.c. power input

The a.c. power input is given by $P_{ac} = I^2_{rms}\,(r_f + R_L)$

$$I_{rms} = \sqrt{\frac{1}{2\pi}\int_0^{2\pi} i^2\,d\theta}$$

Squaring both sides we get

$$I^2_{rms} = \frac{1}{2\pi}\int_0^{2\pi} i^2\,d\theta$$

But i = Im Sinθ

$$I^2_{rms} = \frac{1}{2\pi}\int_0^{\pi} (\mathrm{Im}\,Sin\theta)^2\,d\theta$$ (current flows through diode only for duration 0 to Π)

$$I^2_{rms} = \frac{I_m^2}{4}$$

$$I_{rms} = \frac{I_m}{2}$$

$$\therefore\ P_{ac} = \left(\frac{I_m}{2}\right)^2 (r_f + R_L)$$ ----------(2)

$$\therefore\ \eta = \frac{P_{dc}}{P_{ac}} = \frac{\left(I_m/\pi\right)^2}{\left(I_m/2\right)^2} * \frac{R_L}{(r_f + R_L)}$$

$$\eta = \frac{0.406}{1 + \frac{r_f}{R_L}}$$ ----------(3)

The efficiency is maximum if r_f is negligible as compared to R_L

<u>Therefore maximum rectifier efficiency = 40.6 %</u>

2.5.4 Full-wave rectifier

Full-wave rectifier are of two types

1. Centre tapped full-wave rectifier
2. Bridge rectifier

2.5.4.1Centre tapped full –wave rectifier

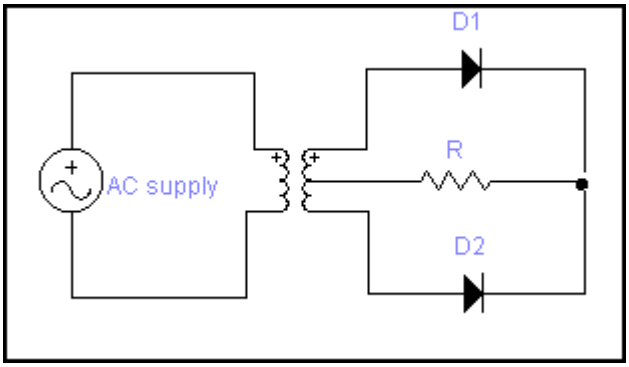

(i)

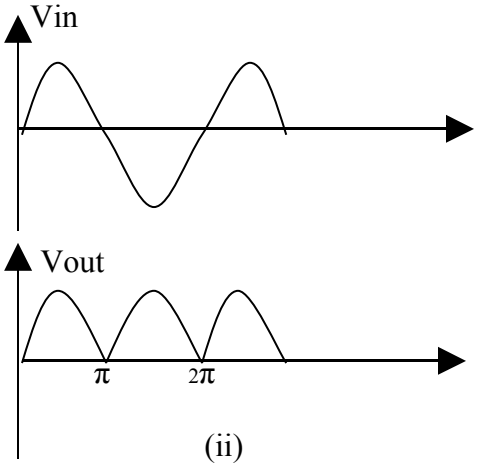

(ii)

Fig. 2.6 Centre tapped Full wave rectifier (i) Circuit diagram (ii) waveforms

- The circuit diagram of a center tapped full wave rectifier is shown in fig. 2.6 above. It employs two diodes and a center tap transformer. The a.c. signal to be rectified is applied to the primary of the transformer and the d.c. output is taken across the load R_L.

- During the +ve half-cycle end X is +ve and end Y is –ve this makes diode D_1 forward biased and thus a current i_1 flows through it and load resistor R_L.Diode D_2 is reverse biased and the current i_2 is zero.

- During the –ve half-cycle end Y is +Ve and end X is –Ve. Now diode D_2 is forward biased and thus a current i_2 flows through it and load resistor R_L. Diode D_1 is reversed and the current $i_1 = 0$.

Disadvantages

- Since, each diode uses only one-half of the transformer secondary voltage the d.c. output is comparatively small.
- It is difficult to locate the center-tap on secondary winding of the transformer.
- The diodes used must have high Peak-inverse voltage.

2.5.4.2 Bridge rectifier

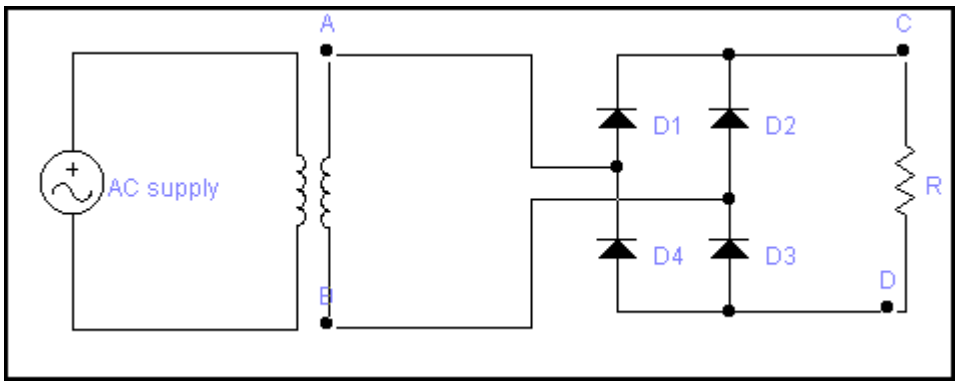

(i)

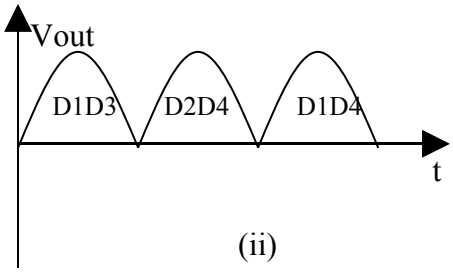

(ii)

Fig. 2.7 Full wave bridge wave rectifier (i) Circuit diagram (ii) waveforms.

- The circuit diagram of a bridge rectifer is shown above. It uses four diodes and a transformer.

- During the +ve half-cycle, end A is +ve and end B is –ve thus diodes D_1 and D_3 are forward bias while diodes D_2 and D_4 are reverse biased thus a current flows through diode D_1, load R_L (C to D) and diode D_3.

- During the –ve half-cycle, end B is +ve and end A is –ve thus diodes D_2 and D_4 are forward biased while the diodes D_1 and D_3 are reverse biased. Now the flow of current is through diode D_4 load R_L (D to C) and diode D_2. Thus, the waveform is same as in the case of center-tapped full wave rectifier.

Advantages

- The need for center-taped transformer is eliminated.
- The output is twice when compared to center-tapped full wave rectifier. for the same secondary voltage.
- The peak inverse voltage is one-half(1/2) compared to center-tapped full wave rectifier.
- Can be used where large amount of power is required.

Disadvantages

- It requires four diodes.
- The use of two extra diodes cause an additional voltage drop thereby reducing the output voltage.

2.5.6 Efficiency of Full-wave rectifier

Let $V = V_m \sin\theta$ be the voltage across the secondary winding
$I = I_m \sin\theta$ be the current flowing in secondary circuit
r_f = diode resistance
R_L = load resistance

dc power output

$$Pdc = I_{dc}^2 R_L \text{ ----------(1)}$$

$$I_{dc} = I_{av} = 2\frac{1}{2\pi}\int_0^{\pi} i.d\theta$$

$$I_{av} = 2\frac{1}{2\pi}\int_0^{\pi} \mathrm{Im}\, Sin\theta\, .d\theta$$

$$I_{av} = \frac{2I_m}{\pi} \text{ ---------- (2)}$$

$$\therefore\ P_{dc} = \left(\frac{2I_m}{\pi}\right)^2 R_L \text{ ---------- (3)}$$

input ac power

$$P_{ac} = I_{rms}^2 \left(r_f + R_L\right) \text{ ---------- } (4)$$

$$I_{rms} = \sqrt{2\frac{1}{2\pi}\int_0^{\pi} i^2 d\theta}$$

Squaring both sides we get

$$I_{rms}^2 = \frac{1}{\pi}\int_0^{\pi} i^2 d\theta$$

$$I_{rms}^2 = \frac{1}{\pi}\int_0^{\pi} (\mathrm{Im}\, Sin\theta\,)^2 d\theta$$

$$I_{rms}^2 = \frac{I_m^2}{2}$$

$$I_{rms} = \frac{I_m}{\sqrt{2}} \text{ ---------- ----- } (5)$$

$$\therefore\ P_{ac} = \left(\frac{I_m}{\sqrt{2}}\right)^2 \left(r_f + R_L\right) \text{ ----------(6)}$$

$$\therefore\ \eta = \frac{P_{dc}}{P_{ac}} = \frac{\left(2I_m/\pi\right)^2}{\left(I_m/\sqrt{2}\right)^2} * \frac{R_L}{\left(r_f + R_L\right)}$$

$$\eta = \frac{0.812}{1 + \frac{r_f}{R_L}} \text{ ----------(7)}$$

The efficiency will be maximum if r_f is negligible as compared to R_L.

<u>Maximum efficiency = 81.2 %</u>

This is the double the efficiency due to half wave rectifier. Therefore a Full-wave rectifier is twice as effective as a half-wave rectifier.

2.6 Comparision of Rectifiers

Particulars	Half wave rectifier	Centre-tapped Full wave rectifier	Bridge rectifier
1. No. of diodes	1	2	4
2. I_{dc}	I_m / Π	$2I_m / \Pi$	$2I_m / \Pi$
3. V_{dc}	V_m / Π	$2V_m / \Pi$	$2V_m / \Pi$
4.I_{rms}	$I_m / 2$	$I_m / \sqrt{2}$	$I_m / \sqrt{2}$
5.Efficiency	40.6 %	81.2 %	81.2 %
6.PIV	V_m	$2V_m$	V_m
7.Ripple factor	1.21	0.48	0.48

Note:

- The relation between turns ratio and voltages of primary and secondary of the transformer is given by
  - $N_1 / N_2 = V_p / V_s$

- RMS value of voltage and Max. value of voltage is related by the equation.
  - $V_{rms} = V_m / \sqrt{2}$ (for full-cycle of ac)

- If the type of diode is not specified then assume the diode to be of silicon type.

- For an ideal diode, forward resistance $r_f = 0$ and cut-in voltage , $V_\gamma = 0$.

2.7 Ripple factor

The pulsating output of a rectifier consists of d.c. component and a.c. component (also known as ripple). The a.c. component is undesirable and account for the pulsations in the rectifier output. The effectiveness of a rectifier depends upon the magnitude of a.c. component in the output : the smaller this component, the more effective is the rectifier.

" The ratio of rms value of a.c. component to the d.c. component in the rectifier output is known as ripple factor"

$$r = \frac{Iac}{Idc}$$

2.7.1 Ripple factor for Half-wave rectification

By definition the effective (ie rms) value of total load current is given by

$$I_{rms} = \sqrt{I_{ac}^2} + I_{dc}^2$$

OR $I_{ac} = \sqrt{I_{rms}^2} - I_{dc}^2$

Where I_{dc} = value of dc component

I_{ac} = rms value of ac component

Divide both R.H.S and L.H.S. by I_{dc} we get

$$\frac{I_{ac}}{I_{dc}} = \frac{1}{I_{dc}}\sqrt{I_{rms}^2} - I_{dc}^2$$

$$r = \sqrt{\left(\frac{I_{rms}}{I_{dc}}\right)^2} - 1 \text{ ----------(1)}$$

for half-wave rectification, we have I $I_{rms} = \frac{I_m}{2}$

$$I_{dc} = \frac{I_m}{\pi}$$

Substituting above values in equation (1) we get,

ripple factor r = 1.21

It is clear that a.c. component exceeds dc component in the output of a half-wave rectifier.

2.7.2 Ripple factor for full-wave rectification

For full wave rectification we have $I_{rms} = \frac{I_m}{\sqrt{2}}$

$$I_{dc} = \frac{2I_m}{\pi}$$

Substituting above values in equation (1) we get ,

ripple factor r = 0.48

This shows that in the output of Full-wave rectifier, the d.c. component is more than the a.c. component

2.8 FILTERS

We know that the output of the rectifier is pulsating d.c. ie the output obtained by the rectifier is not pure d.c. but it contains some ac components along with the dc o/p. These ac components are called as Ripples, which are undesirable or unwanted. To minimize the ripples in the rectifier output filter circuits are used. These circuits are normally connected between the rectifier and load as shown below.

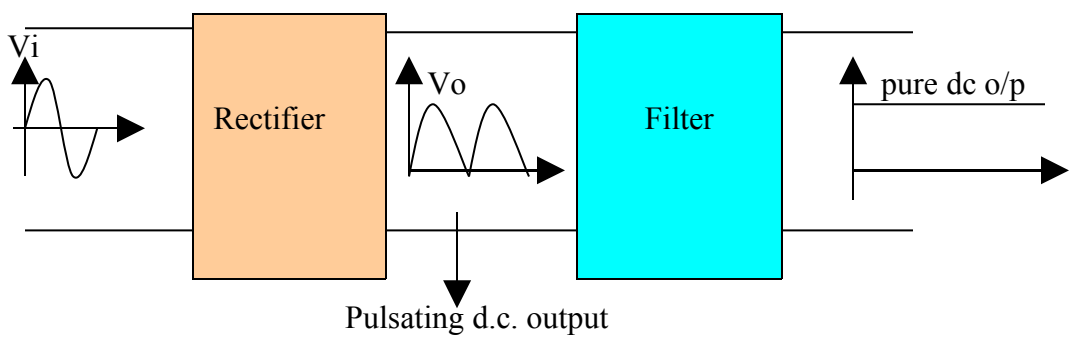

Filter is a circuit which converts pulsating dc output from a rectifier to a steady dc output. In otherwords, filters are used to reduce the amplitudes of the unwanted ac components in the rectifier.

Note: A capacitor passes ac signal readily but blocks dc.

2.8.1 Types of Filters

1. Capacitor Filter (C-Filter)
2. Inductor Filter
3. Choke Input Filter (LC-filter)
4. Capacitor Input Filter (Π-filter)

2.8.2 Capacitor Filter(C-filter)

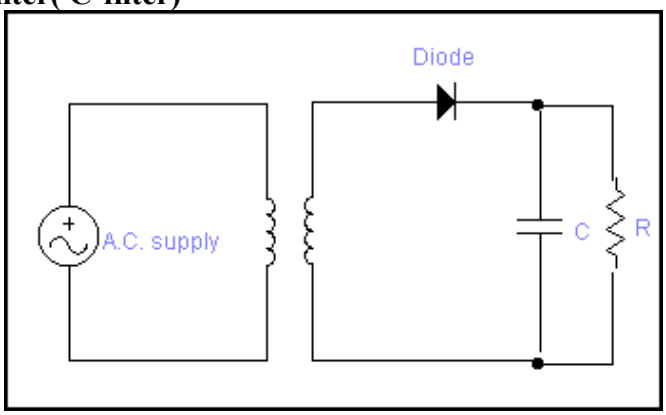

(i)

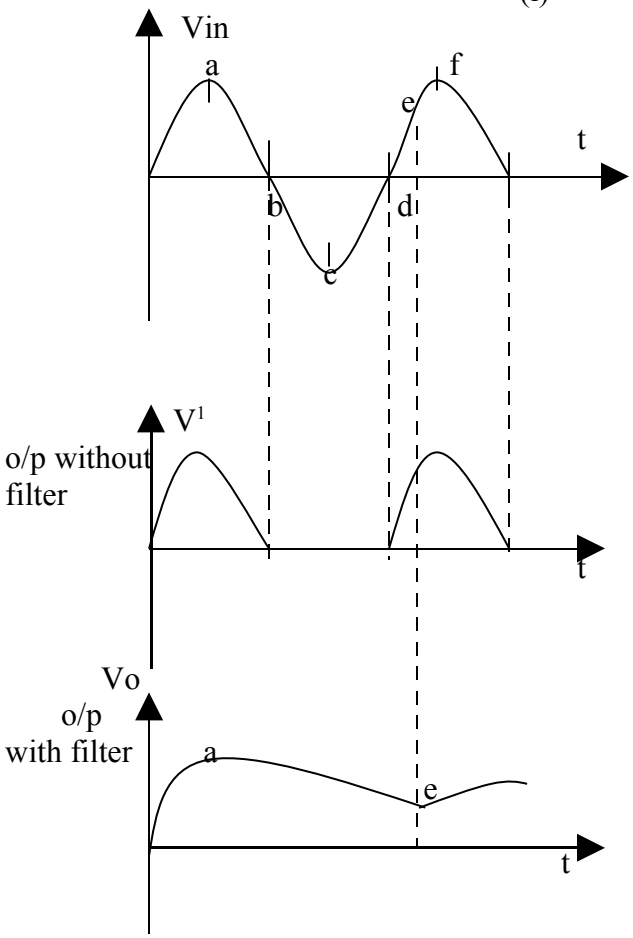

Fig.2.8 Capacitor filter (C-filter) (i) Circuit diagram (ii) waveforms

- When the Input signal rises from o to a the diode is forward biased therefore it starts conducting since the capacitor acts as a short circuit for ac signal it gets charged up to the peak of the input signal and the dc component flows through the load R_L.

- When the input signal fall from a to b the diode gets reverse biased . This is mainly because of the voltage across the capacitor obtained during the period o to a is more when comapared to V_i. Therefore there is no conduction of current through the diode.

- Now the charged capacitor acts as a battery and it starts discharging through the load R_L. Mean while the input signal passes through b,c,d section. When the signal reaches the point d the diode is still reverse biased since the capacitor voltage is more than the input voltage.

- When the signal reaches point e, the input voltage can be expected to be more than the capacitor voltage. When the input signal moves from e to f the capacitor gets charged to its peak value again. The diode gets reverse biased and the capacitor starts discharging. The final output across R_L is shown in Fig. 2.8

The ripple factor for a Half-wave rectifier with C-filer is given by

$r = 1/2\sqrt{3} f_C R_L$

f-----the line frequency (Hz)
C-----capacitance (F)
R_L------- Load resistance (Ω)

Ripple factor for full-wave rectifier with C-filter is given by $r = 1/ 4 \sqrt{3} f_C R_L$

2.8.3 Advantages of C-Filter

- low cost, small size and good characteristics.
- It is preferred for small load currents (upto 50 mA)
- It is commonly used in transistor radio, batteries eliminator etc.

2.9 Zener Diode

The reverse voltage characteristics of a semiconductor diode including the breakdown region is shown below.

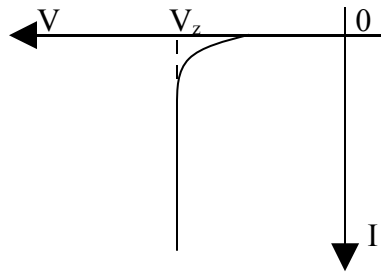

Fig. 2.9 Zener diode characteristics

Zener diodes are the diodes which are designed to operate in the breakdown region. They are also called as Breakdown diode or Avalanche diodes.

The symbol of Zener diode is shown below

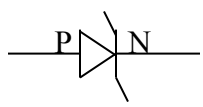

Fig. 2.10 Symbol of Zener diode

The breakdown in the Zener diode at the voltage V_z may be due to any of the following mechanisms.

1. Avalanche breakdown

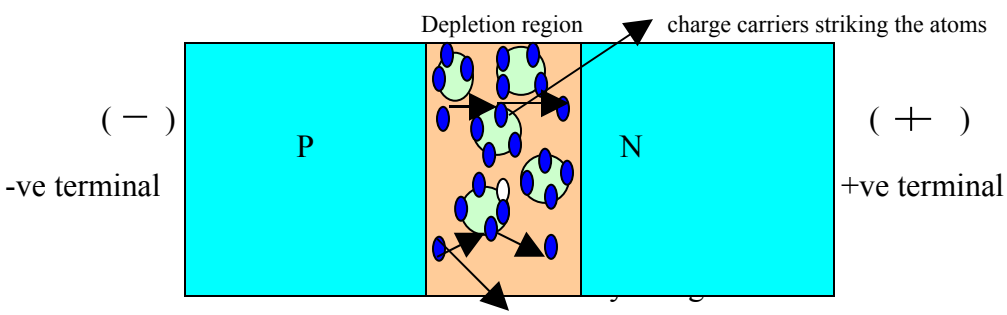

Fig. 2.11 Avalanche breakdown in Zener diode

- We know that when the diode is reverse biased a small reverse saturation current I_0 flows across the junction because of the minority cariers in the depletion region.

- The velocity of the minority charge carriers is directly proportional to the applied voltage. Hence when the reverse bias voltage is increased, the velocity of minority charge carriers will also increase and consequently their energy content will also increase.

- When these high energy charge carriers strikes the atom within the depletion region they cause other charge carriers to break away from their atoms and join the flow of current across the junction as shown above. The additional charge carriers generated in this way strikes other atoms and generate new carriers by making them to break away from their atoms.

- This cumulative process is referred to as avalanche multiplication which results in the flow of large reverse current and this breakdown of the diode is called avalanche breakdown.

2.Zener breakdown

We have electric field strength = Reverse voltage/ Depletion region

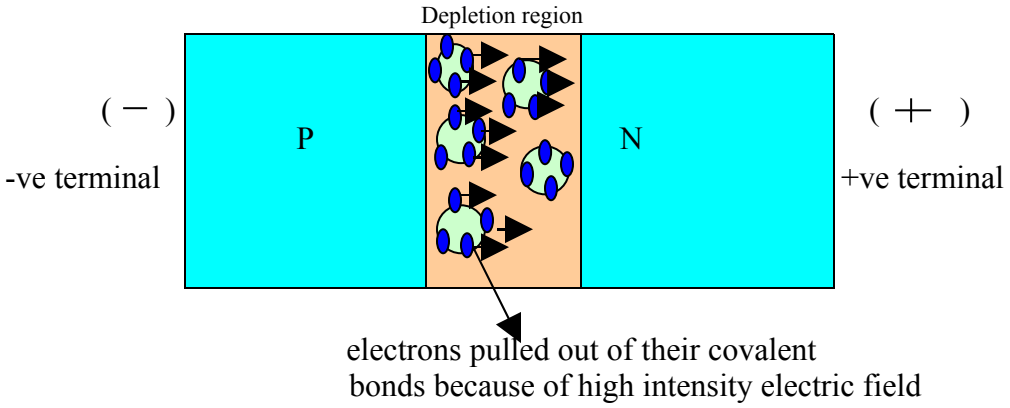

Fig.2.12 Zener breakdown in Zener diode

From the above relation we see that the reverse voltage is directly proportional to the electric field hence, a small increase in reverse voltage produces a very high intensity electric field with ina narrow Depletion region.

Therefore when the reverse voltage to a diode is increased, under the influence of high intensity electric filed large numbr of electrons within the depletion region break the covalent bonds with their atoms as shown above and thus a large reverse current flows through the diode. This breakdown is referred to as Zener breakdown.

2.9.1 Zener voltage regulator

The circuit diagram of Zener voltage regulator is shown below

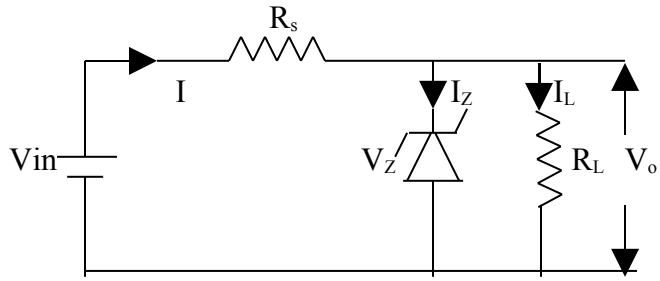

Fig. 2.13 Zener voltage regulator

.

A zener diode of breakdown voltage V_Z is connected in reverse biased condition across the load R_L such that it operates in breakdown region. Any fluctuations in the current are absorbed by the series resistance R_s. The Zener will maintain a constant voltage V_Z (equal to V_o) across the load unless the input voltage does not fall below the zener breakdown voltage V_Z.

Case(i) When input voltage V_{in} varies and R_L is constant

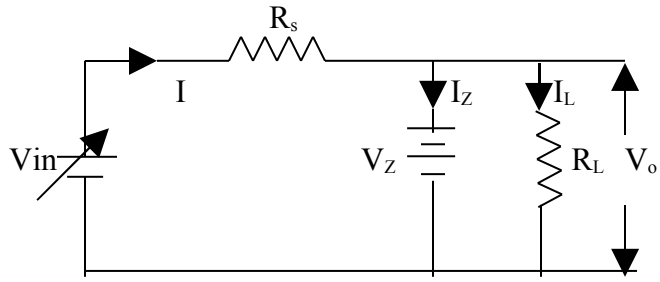

If the input voltage increases, the Zener diode which is in the breakdown region is equivalent to a battery V_Z as shown in figure. The output voltage remains constant at V_Z (equal to Vo) and the excess voltage is dropped across the series resistance R_S. We know that for a zener diode under breakdown region large change in current produces very small change in voltage, thereby the output voltage remains constant.

Case (ii) When V_{in} is constant and R_L varies.

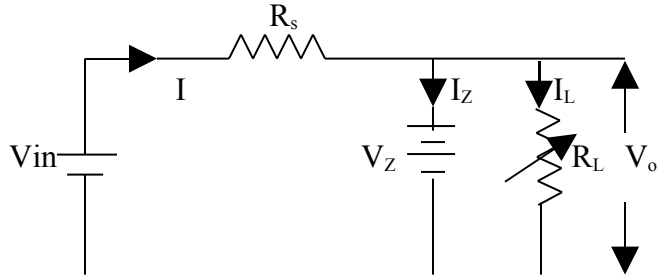

If there is a decrease in the load resistance R_L and the input voltage remains constant then there is a increase in load current.

Since V_{in} is constant the current cannot come from the source. This addition load current is driven from the battery V_Z and we know that even for a large decrease in current the Zener output voltage V_z remains same. Hence the output voltage across the load is also constant..

CHAPTER 3

TRANSISTORS

A transistor is a sandwich of one type of semiconductor (P-type or n-type) between two layers of other types.

Transistors are classified into two types;

1. **pnp transistor**
   pnp transistor is obtained when a n-type layer of silicon is sandwiched between two p-type silicon material.

2. **npn transisitor**
   npn transistor is obtained when a p-type layer of silicon is sandwiched between two n-type silicon materials.

Figure3.1 below shows the schematic representations of a transistor which is equivalent of two diodes connected back to back.

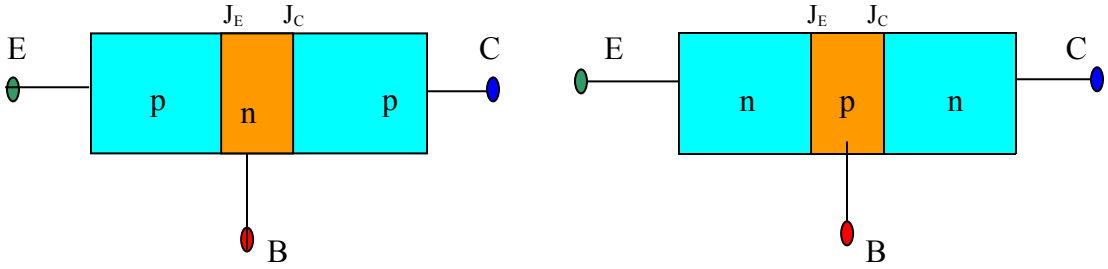

Fig 3.1: Symbolic representation

Fig 3.2: Schematic representation

- The three portions of transistors are named as emitter, base and collector. The junction between emitter and base is called emitter-base junction while the junction between the collector and base is called collector-base junction.

- The base is thin and tightly doped, the emitter is heavily doped and it is wider when compared to base, the width of the collector is more when compared to both base and emitter.

- In order to distinguish the emitter and collector an arrow is included in the emitter. The direction of the arrow depends on the conventional flow of current when emitter base junction is forward biased.

- In a pnp transistor when the emitter junction is forward biased the flow of current is from emitter to base hence, the arrow in the emitter of pnp points towards the base.

3.1 Operating regions of a transistor

A transistor can be operated in three different regions as

a) active region
b) saturation region
c) cut-off region

Active region

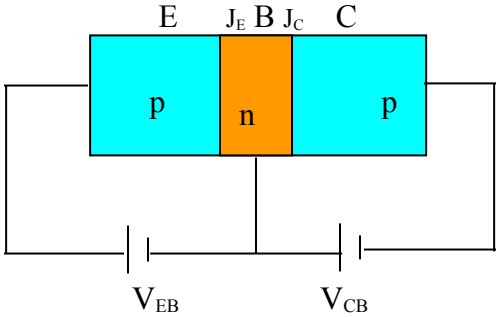

Fig 3.3: pnp transistor operated in active region

The transistor is said to be operated in active region when the emitter-base junction is forward biased and collector –base junction is reverse biased. The collector current is said to have two current components one is due to the forward biasing of EB junction and the other is due to reverse biasing of CB junction. The collector current component due to the reverse biasing of the collector junction is called reverse saturation current (I_{CO} or I_{CBO}) and it is very small in magnitude.

Saturation region

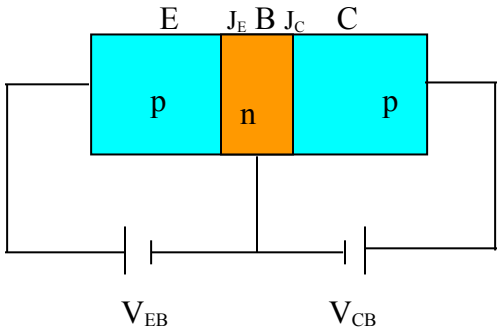

Fig 3.4: pnp transistor operated in Saturation region

Transistor is said to be operated in saturation region when both EB junction and CB junction are forward biased as shown. When transistor is operated in saturation region I_C increases rapidly for a very small change in V_C.

Cut-off region

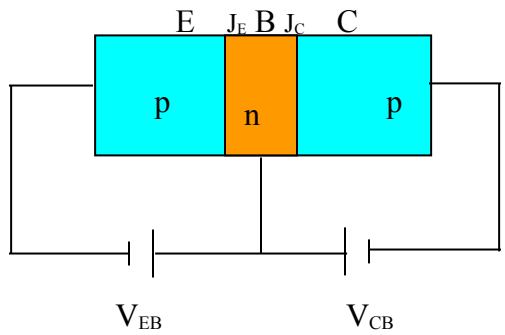

Fig 3.5: pnp transistor operated in Cut-off region

When both EB junction and CB junction are reverse biased, the transistor is said to be operated in cut-off region. In this region, the current in the transistor is very small and thus when a transistor in this region it is assumed to be in off state.

3.2 Working of a transistor (pnp)

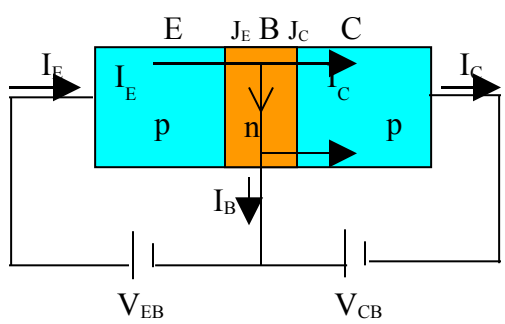

Fig 3.6 Transistor in active region

- Consider a pnp transistor operated in active region as shown in Figure 3.6
- Since the EB junction is forward biased large number of holes present in the emitter as majority carriers are repelled by the +ve potential of the supply voltage V_{EB} and they move towards the base region causing emitter current I_E.
- Since the base is thin and lightly doped very few of the holes coming from the emitter recombine with the electrons causing base current I_B and all the remaining holes move towards the collector. Since the CB junction is reverse

biased all the holes are immediately attracted by the –ve potential of the supply V_{CB}. Thereby giving rise to collector current I_C.

- Thus we see that $I_E = I_B + I_C$ ----------(1) (By KVL)
- Since the CB junction is reverse biased a small minority carrier current I_{CO} flows from base to collector.

3.3 Current components of a transistor

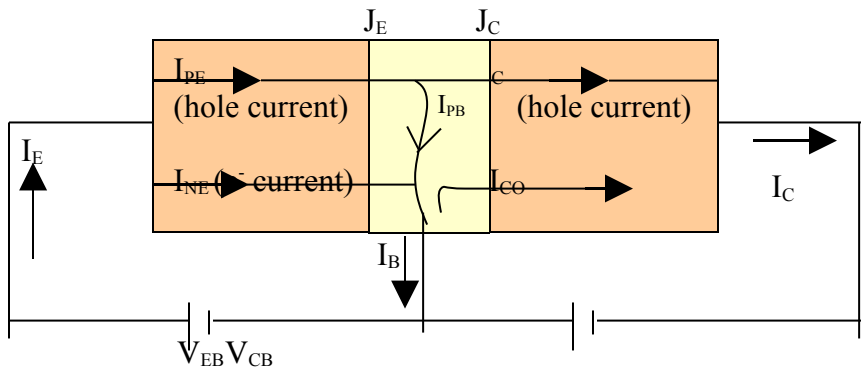

Fig 3.7:Current components of a transistor

Fig 3.7 above shows a transistor operated in active region. It can be noted from the diagram the battery V_{EB} forward biases the EB junction while the battery V_{CB} reverse biases the CB junction.

As the EB junction is forward biased the holes from emitter region flow towards the base causing a hole current I_{PE}. At the same time, the electrons from base region flow towards the emitter causing an electron current I_{NE}. Sum of these two currents constitute an emitter current $I_E = I_{PE} + I_{NE}$.

The ratio of hole current I_{PE} to electron current I_{NE} is directly proportional to the ratio of the conductivity of the p-type material to that of n-type material. Since, emitter is highly doped when compared to base; the emitter current consists almost entirely of holes.

Not all the holes, crossing EB junction reach the CB junction because some of the them combine with the electrons in the n-type base. If I_{PC} is the hole current at (Jc) CB junction. There will be a recombination current I_{PE} - I_{PC} leaving the base as shown in figure 3.7.

If emitter is open circuited, no charge carriers are injected from emitter into the base and hence emitter current I_E =o. Under this condition CB junction acts a a reverse biased

diode and therefore the collector current ($I_C = I_{CO}$) will be equal to te reverse saturation current. Therefore when EB junction is forward biased and collector base junction is reverse biased the total collector current $I_C = I_{PC} + I_{CO.}$

3.4 Transistor configuration

We know that, transistor can be used as an amplifier. For an amplifier, two terminals are required to supply the weak signal and two terminals to collect the amplified signal. Thus four terminals are required but a transistor is said to have only three terminals Therefore, one terminal is used common for both input and output.

This gives rise to three different combinations.

1. Common base configuration (CB)
2. Common emitter configuration (CE)
3. Common collector configuration (CC)

1. CB configuration

A simple circuit arrangement of CB configuration for pnp transistor is shown below.

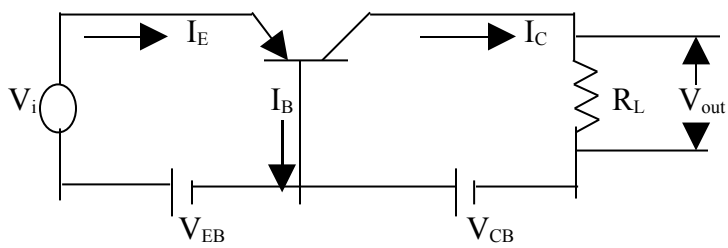

Fig 3.8:CB configuration

In this configuration, base is used as common to both input and output. It can be noted that the i/p section has an a.c. source V_i along with the d.c. source V_{EB}. The purpose of including V_{EB} is to keep EB junction always forward biased (because if there is no V_{EB} then the EB junction is forward biased only during the +ve half-cycle of the i/p and reverse biased during the –ve half cycle). In CB configuration, I_E –i/p current, I_C –o/p current.

Current relations

1.current amplification factor (α)

It is defined as the ratio of d.c. collector current to d.c. emitter current

$$\alpha = \frac{I_O}{I_E}$$

2. Total o/p current

We know that CB junction is reverse biased and because of minority charge carriers a small reverse saturation current I_{CO} flows from base to collector.

$I_C = I_E + I_{CO}$

Since a portion of emitter current I_E flows through the base ,let remaining emitter current be αI_E .

$\mathbf{I_C = \alpha I_E + I_C o}$

Characteristics

1. **Input characteristics**

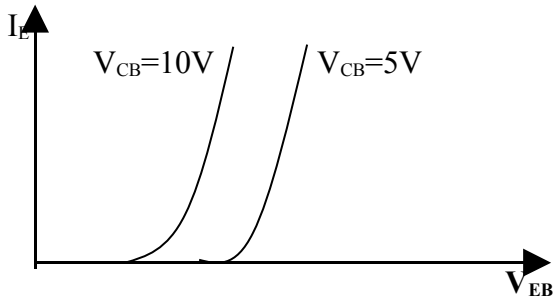

Fig 3.9: Input characteristics

I/p characteristics is a curve between I_E and emitter base voltage V_{EB} keeping V_{CB} constant. I_E is taken along y-axis and V_{EB} is taken along x-axis. From the graph following points can be noted.

1. For small changes of V_{EB} there will be a large change in I_E. Therefore input resistance is very small.
2. I_E is almost independent of V_{CB}
3. I/P resistance , $R_i = \Delta V_{EB} / \Delta I_E \big|_{V_{CB}}$ =constant

2. Output characteristics

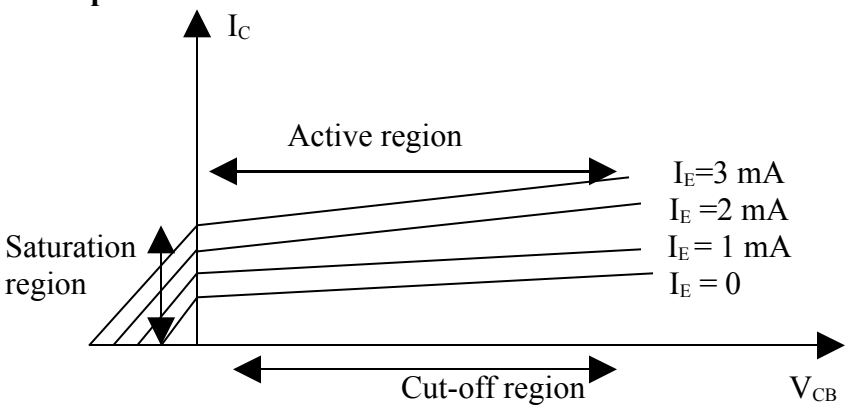

Fig 3.10:Output characteristics

o/p characteristics is the curve between I_C and V_{CB} at constant I_E. The collector current I_C is taken along y-axis and V_{CB} is taken along x-axis. It is clear from the graph that the o/p current I_C remains almost constant even when the voltage V_{CB} is increased.

i.e. , a very large change in V_{CB} produces a small change in I_C. Therefore, output resistance is very high.

O/p resistance $R_o = \Delta V_{EB} / \Delta I_C \Big|_{I_E = \text{constant}}$

Region below the curve $I_E = 0$ is known as cut-off region where I_C is nearly zero. The region to the left of $V_{CB} = 0$ is known as saturation region and to the right of $V_{CB} = 0$ is known as active region.

2. CE configuration

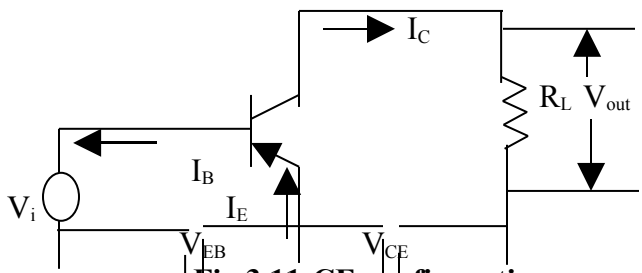

Fig 3.11:CE configuration

In this configuration the input is connected between the base and emitter while the output is taken between collector and emitter. For this configuration I_B is input current and I_C is the output current.

1. Current amplification factor (β)

It is the ratio of d.c. collector current to d.c. base current.
i.e., $\boldsymbol{\beta = I_C / I_B}$

2. Relationship between α and β

We know that $\alpha = \dfrac{I_C}{I_E}$

$$\alpha = \frac{I_C}{I_B + I_C}$$

divide both numerator and denominator of RHS by I_C, we get

$$\alpha = \frac{1}{\dfrac{I_B}{I_C} + 1}$$

$$\alpha = \frac{1}{\dfrac{1}{\beta} + 1}$$

($I_C / I_B = \beta$)

$$\alpha = \frac{\beta}{1+\beta}$$

Also we have

$$\alpha(1+\beta) = \beta$$

$$\alpha + \alpha\beta = \beta$$

$$\alpha = \beta - \alpha\beta$$

$$\alpha = \beta(1-\alpha)$$

$$\beta = \frac{\alpha}{1-\alpha}$$

Derivation of Total output current I_C

We have $I_C = \alpha I_E + I_{CBO}$

$$I_C = \frac{\beta}{1+B} I_E + I_{CBO}$$

$$I_C = \frac{\beta I_E + (1+\beta) I_{CBO}}{1+\beta}$$

$$\boxed{Ic = \beta I_B + (1+\beta) I_{CBO}}$$

<u>Transistor Characteristics</u>

1. i/p characteristics

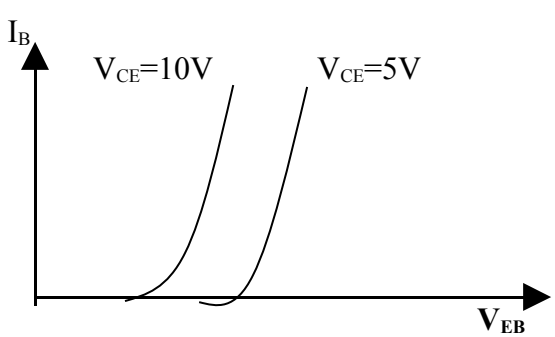

Fig 3.11: i/p characteristics

Input characteristics is a curve between EB voltage (V_{EB}) and base current (I_B) at constant V_{CE}. From the graph following can be noted.

1. The input characteristic resembles the forward characteristics of a p-n junction diode.
2. For small changes of V_{EB} there will be a large change in base current I_B. i.e., input resistance is very small.
3. The base current is almost independent of V_{CE}.
4. Input resistance , $R_i = \Delta V_{EB} / \Delta I_B \quad V_{CE} = \text{constant}$

2. Output characteristics

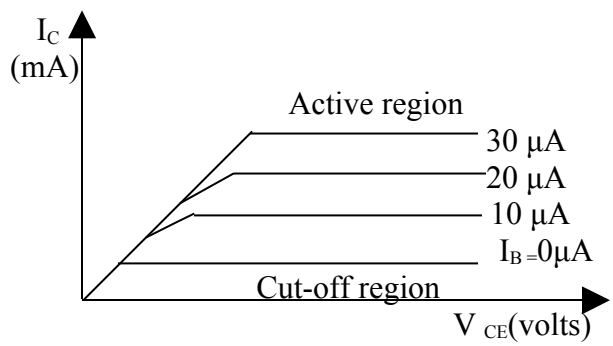

Fig 3.12: Output characteristics

It is the curve between V_{CE} and I_C at constant I_B. From the graph we can see that,

1. Very large changes of V_{CE} produces a small change in I_C i.e output resistance is very high.
2. output resistance $R_o = \Delta V_{CE} / \Delta I_C \mid I_B = \text{constant}$

Region between the curve I_B =0 is called cut-off region where I_B is nearly zero. Similarly the active region and saturation region is shown on the graph.

<u>3. CC configuration</u>

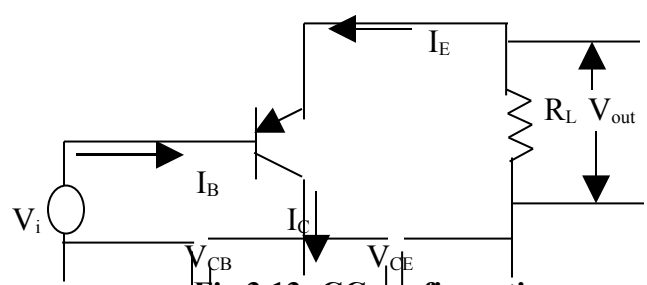

Fig 3.13: CC configuration

In this configuration the input is connected between the base and collector while the output is taken between emitter and collector.
Here I_B is the input current and I_E is the output current.

Current relations

1. Current amplification factor (γ)

2. Relationship between α β and γ

$$\gamma = \frac{I_E}{I_B}$$

$$\gamma = \frac{I_B + I_C}{I_B}$$

divide both Numerator and denominator by I_B

$$\gamma = \frac{1 + I_C / I_B}{1}$$

$$\gamma = 1 + \beta \qquad (\beta = I_C / I_B)$$

$$\gamma = 1 + \frac{\alpha}{1 - \alpha}$$

$$\boxed{\gamma = \frac{1}{1 - \alpha}}$$ ----------

Derivation of total output current I_E

We know that $I_C = \alpha I_E + I_{CBO}$

$$I_E = I_B + I_C$$

$$I_E = I_B + \alpha I_E + I_{CBO}$$

$$I_E(1-\alpha) = I_B + I_{CBO}$$

$$I_E = \frac{I_B}{1 - \alpha} + \frac{I_{CBO}}{1 - \alpha}$$

$$I_E = \gamma I_B + \gamma I_{CBO}$$

$$\boxed{I_E = \gamma\,(I_B + I_{CBO})}$$ ----------

3.5 Comparison between CB, CC and CE configuration

Characteristics	CB	CE	CC
1. Input reistance (R_i)	low	low	high
2. Output resistance (R_o)	high	high	low
3. Current amplification factor	$\alpha = \frac{\beta}{1+\beta}$	$\beta = \frac{\alpha}{1-\alpha}$	$\gamma = \frac{1}{1-\alpha}$
4. Total output current	$I_C = \alpha I_E + I_{CBO}$	Ic = $\beta I_B + (1+\beta) I_{CBO}$	$I_E = \gamma I_B + \gamma I_{CBO}$
5. Phase relationship between input and output	In-phase	Out-of phase	in-phase
6. Applications	For high frequency applications	For audio frequency applications	For impedance matching
7. Current gain	Less than unity	Greater than unity	Very high
8. Voltage gain	Very high	Grater than unity	Less than unity

3.6 Transistor as an amplifier

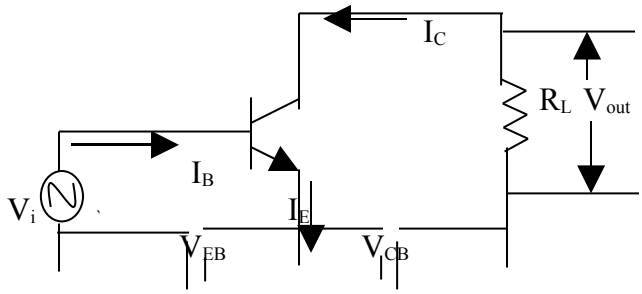

Fig 3.13: Transistor as an amplifier

Consider a npn transistor in CE configuration as shown above along with its input characteristics.

A transistor raises the strength of a weak input signal and thus acts as an amplifier. The weak signal to be amplified is applied between emitter and base and the output is taken across the load resistor R_C connected in the collector circuit.

In order to use a transistor as an amplifier it should be operated in active region i.e. emitter junction should be always FB and collector junction should be RB. Therefore in addition to the a.c. input source V_i two d.c. voltages V_{EB} and V_{CE} are applied as shown. This d.c. voltage is called bias voltage.

As the input circuit has low resistance, a small change in te signal voltage V_i causes a large change in the base current thereby causing the same change in collector current (because $I_C = \beta I_B$).

The collector current flowing through a high load resistance R_C produces a large voltage across it. Thus a weak signal applied at the input circuit appears in the amplified form at the output. In this way transistor acts as an amplifier.

Example: Let $R_C = 5K\Omega$, $V_{in} = 1V$, $I_C = 1mA$ then output $V = I_C R_C = 5V$

3.7 Bias stabilization

The process of making operating point independent of temperature changes or variation in transistor parameters is called the stabilization.

We know that for transistor to operate it should be properly biased so that we can have a fixed operating point. To avoid any distortions, the Q-point should be at the center of the load line.

But in practice this Q-point may shift to any operating region (saturation or cur-off region) making the transistor unstable. Therefore in order to avoid this, biasing stability should be maintained.

3.8 Causes for Bias instability

Bias instability occurs mainly due to two reasons.

1. Temperature
2. Current gain

1. Temperature (T)

The temperature at the junctions of a transistor depends on the amount of current flowing through it. Due to increase in temperature following parameters of a transistor will change.

(a)base-emitter voltage (V_{BE})

V_{BE} increases at a rate of 2.4mV/^{0}C. With increase in temperature the base current I_B will increase and since $I_C = \beta I_B$, I_C is also increased hence, changing the Q-point.

(b) Reverse saturation current (I_{CBO})

We know that $I_C = \beta I_B + (1+\beta)\ I_{CBO}$ where I_{CBO} is the reverse saturation current. As the temperature increases I_{CBO} increases there by increase in I_C and hence changing the Q-point.

2. Current gain (β)

In the process of manufacturing the transistors different transistors of same type may have different parameters (i.e. if we take two transistor units of same type and use them in the circuit there is a change in the β value in actual practice). The biasing circuit will be designed according to the required β value but due to the change in β from unit to unit the operating point may shift.

3.9 Cascading transistor amplifiers

When the amplification provided by a single stage amplifier is not suffiecient for a particular purpose or when the input and output impedance is not of the correct magnituded for the required application then two or more amplifiers are connected in cascade as shown below.

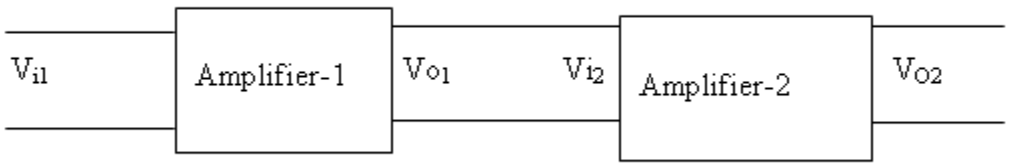

Fig 3.14:Cascading transistor amplifiers

Here the output of amplifier 1 is connected as the input of amplifier 2.

Example: The gain of a single amplifier is not sufficient to amplify a signal from a weak source such as microphone to a level which is suitablefor the operation of another circuit as loud speaker. In such cases, amplifiers are used.

When amplifiers are cascaded, individual amplifiers provides required amplification and input and output provide impedance matching.

Decibel (dB)
Many a times it is convenient to represent the gain of an amplifier on a log scale instead of a linear scale. The unit of this log scale is called decibel.

Power gain $=\log_e(\text{Pout}/\text{Pin})$ bel

Power gain in dB $=10\log_{10}(\text{Pout}/\text{Pin})$ dB

Voltage gain $=20\log_{10}(\text{Vout}/\text{Vin})$ dB

Current gain $= 20\log_{10}(I_{out} / I_{in})$ dB

Note: For a multistage amplifier if A_{V1}, A_{V2}, and A_{V3} are the voltage gains of amplifier 1,2, and 3 respectively then the overall voltage gain $A_V = A_{V1} \times A_{V2} \times A_{V3}$.

If it is expressed in dB the $A_V(dB) = A_{V1}(dB) + A_{V2}(dB) + A_{V3}(dB)$

Similarly for four or more stages.

3.10 Single stage RC coupled Amplifier

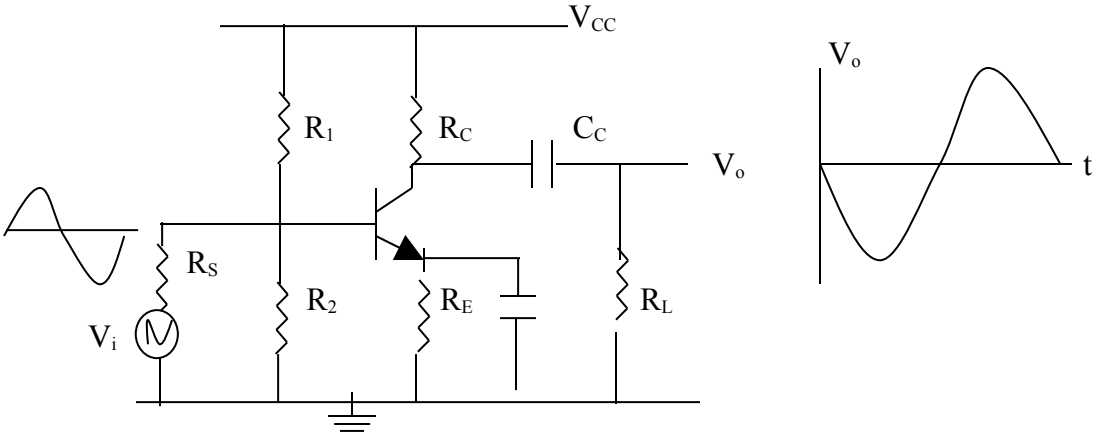

Fig 3.15:single stage RC-coupled amplifier

Figure above shows a practical circuit of a single stage RC coupled amplifier.The different circuit components and their functions are as described below.

a. **Input capacitor(C_{in})-** This capacitor is used to couple the input signal to the base of the transistor if it is not used, the signal source resistance R_S gets in parallel with R_2 thus changing the bias. The capacitor C_{in} blocks any d.c. component present in the signal and passes only a.c. signal for amplification.

b. **Biasing circuit –**The resistances R_1, R_2 and R_E forms the biasing and stabilization circuit for the CE amplifier. It sets the proper operating point for the amplifier.

c. **Emitter bypass capacitor (C_E)-**This capacitor is connected in parallel with the emitter resistance R_E to provide low reactance path to the amplified a.c. signal. If it is not used, the amplified a.c. signal passing through R_E will cause voltage drop across itthereby reducing the output voltage of the amplifier.

d. **Coupling capacitor(Cc)-** This capacitor couples the output of the amplifier to the load or to the next stage of the amplifier. If it is not used, the biasing conditions of the next stage will change due to the parallel effect of collector resistor R_C.
i.e. R_C will come in parallel with the resistance R_1 of the biasing network of the next stage thus changing the biasing conditions of the next stage amplifier.

3.11 Two stage RC coupled amplifier

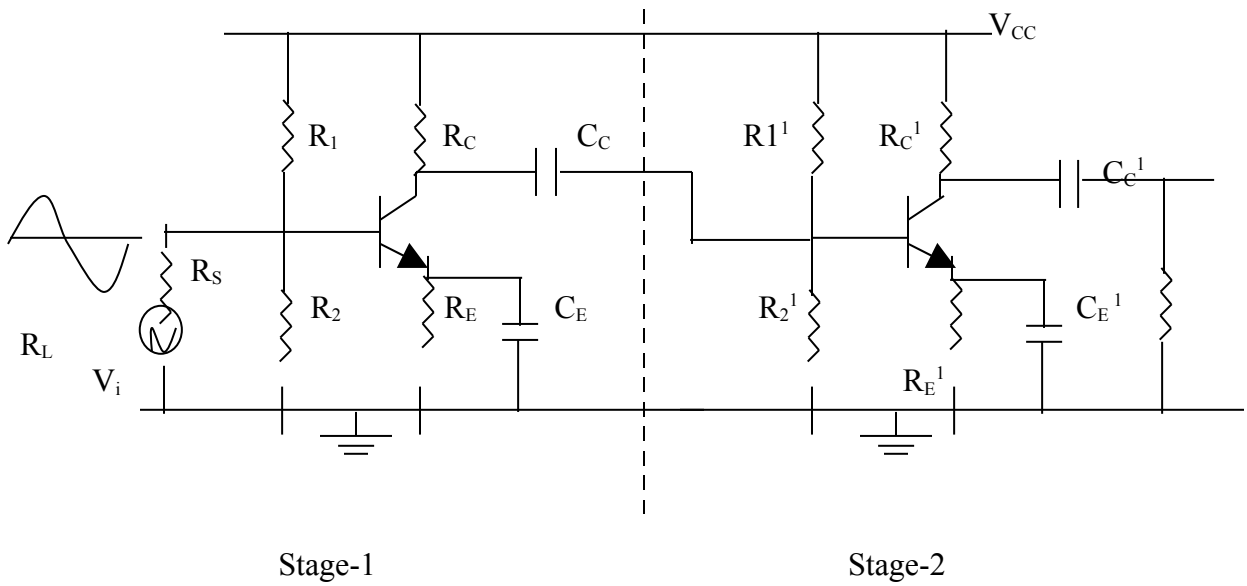

Fig 3.16: Two stage RC coupled Amplifier

Figure above shows the circuit diagram of a two stage RC coupled amplifier . The coupling capacitor C_C connects the output of the first stage to the input of the second stage. Since the coupling from one stage to the next stage is achieved by coupling capacitor along with a shunt resistor the amplifier is called RC coupled amplifier.. The input signal is first applied to the transistor T_1 and output is taken at the collector of T_1. The signal at the output will be 180^0 out of phase when compared to the input. The output is taken across R_C with the help of a coupling capacitor. This signal is fed as input to the next stage i.e transistor T_2. The signal is amplified further and the amplified output is taken across R_c^1 of T_2. The phase of the signal is reversed again. The output is amplified twice and its is amplified replica of the input signal.

<u>3.12 Frequency response in amplifer</u>

Frequency response is the curve between the gain of the amplifier ($A = V_o / V_i$) verses the frequency of the input signal. The frequency response of a typical RC-coupled amplifier is shown below.

Frequency response has 3 regions.

1. Low frequency range
2. Mid frequency range
3. High frequency range

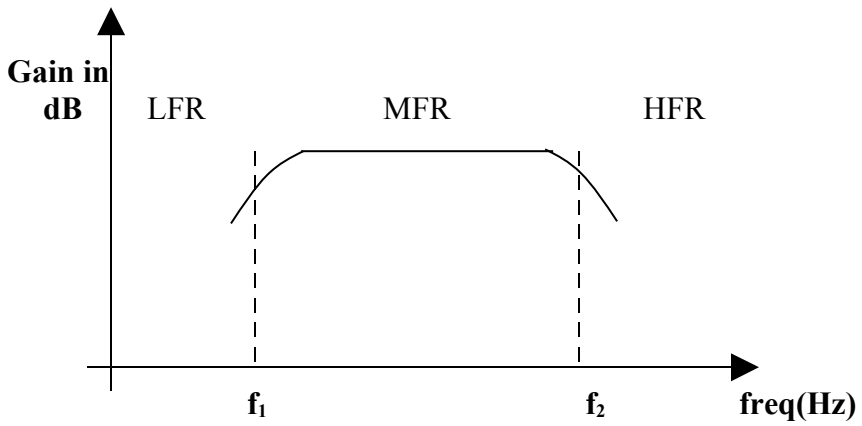

Fig 3.16: Frequency response in amplifer

Low frequency range (< 50 Hz)

We have

$X_c = \frac{1}{2\pi RC}$ where X_C ----- reactance of capacitor.;

f-----frequency

Since frequency is inversely proportional to the reactance, the reactance of the coupling capacitor C_C will be quite high at low frequencies.

Hence very small amount of signal will pass through one stage to the next stage. Moreover C_E cannot shunt the emitter resistance R_E effectively because of its large reactance at low frequency. These two factors causes the fall of voltage gain at low frequencies.

Mid frequency range (50Hz –20KHz)

In this range of frequencies, voltage gain of the amplifier is constant. The effect of coupling capacitor in this range is as such to maintain a uniform voltage gain.

High frequency range (> 20 KHz)

In this range of frequency, the reactance of the coupling capacitor C_C is very small and it behaves as a short circuit. This increases the loading effect of next stage (R_C will comes in parallel with R_1) and reduces the voltage gain. This reduces the current amplification there by the voltage drops at high frequencies.

Advantages of RC coupled amplifer

1. **Low cost-**Because only resistors and capacitors are used for biasing and coupling which are cheap.
2. **Compact-**Because modern resistor and capacitors are small and light
3. **Good frequency response-** The gain is constant over the audio frequency range and hence suitable for audio frequency amplification.

3.13 DC Load Line and Operating point selection

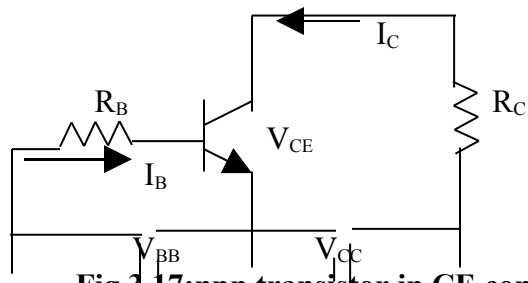

Fig 3.17:npn transistor in CE configuration

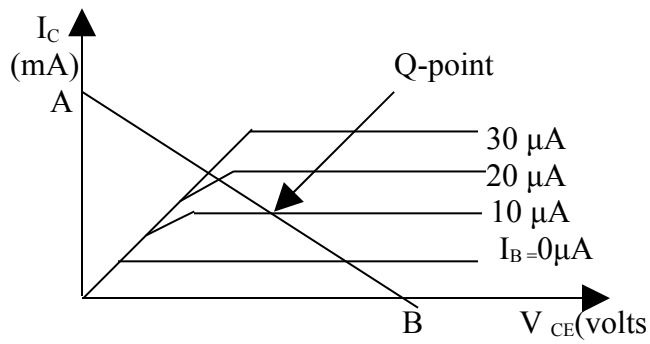

Fig.3.18: output characteristics

Consisder a CE amplifier along with the output characteristics as shown in figure 3.18 above. A straight line drawn on the output characteristic of a transistor which gives the various zero signal values (ie. When no signal applied) of V_{CE} and I_C is called DC load line.

<u>Construction of DC load line</u>

Applying KVL to the collector circuit we get,

$V_{CC} - I_C R_C - V_{CE} = 0$----------1

$V_{CE} = V_{CC} - I_C R_C$ ----------2

The above equation is the first degree equation and can be represented by a straight line. This straight line is DC load line.

To draw the load line we require two end points which can be found as follows.

1. If $I_C = 0$, equn 2 becomes $V_{CE} = V_{CC}$

2. if $V_{CE} = 0$, equn 2 becomes $V_{CC} = I_C R_C$ ie. $I_C = V_{CC}/R_C$

3.14 Operating point (Q)

A point on the d.c. load line which represent the zero signal values of V_{CE} and I_C in a transistor is called as operating point or silent point or quiescent point or Q-point.

The Q-point is selected where the DC load line intersects the curve of output characteristics for particular value of zero signal current.

i.e. Q-point = (V_{CE} ,I_C)

CHAPTER 4

OPERATIONAL AMPLIFEIR

INTRODUCTION

Op-Amp (operational amplifier) is basically an amplifier available in the IC form. The word "operational" is used because the amplifier can be used to perform a variety of mathematical operations such as addition, subtraction, integration, differentiation etc.

Figure 1 below shows the symbol of an Op-Amp.

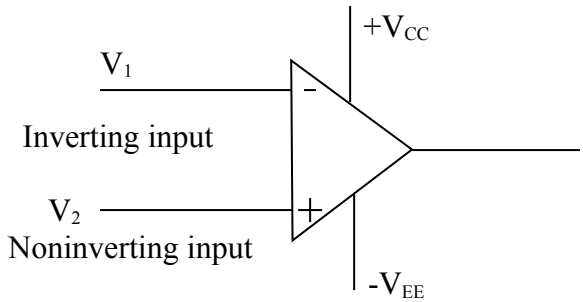

Fig.1 Symbol of Op-Amp

It has two inputs and one output. The input marked "-" is known as Inverting input and the input marked "+" is known as Non-inverting input.

- If a voltage V_i is applied at the inverting input (keeping the non-inverting input at ground) as shown below.

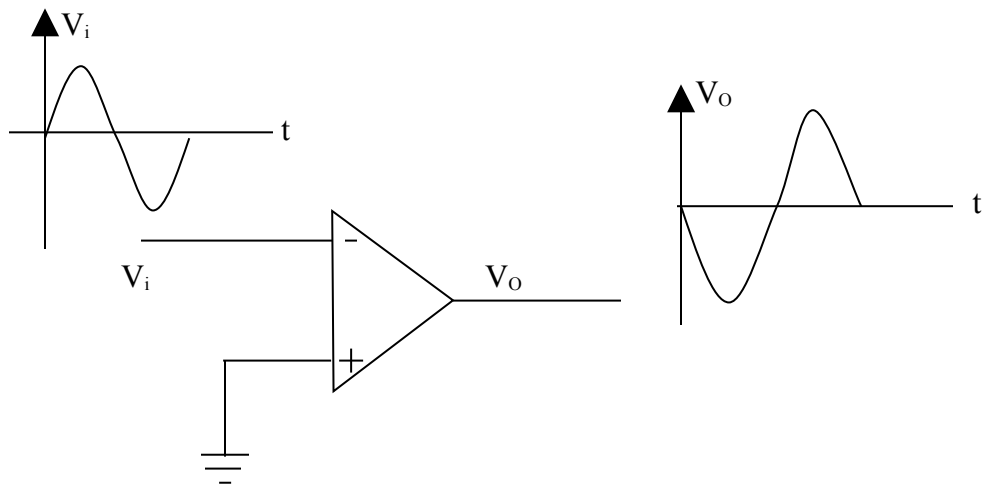

Fig.2 Op-amp in inverting mode

The output voltage $V_o = -AV_i$ is amplified but is out of phase with respect to the input signal by 180^0.

- If a voltage V_i is fed at the non-inverting input (Keeping the inverting input at ground) as shown below.

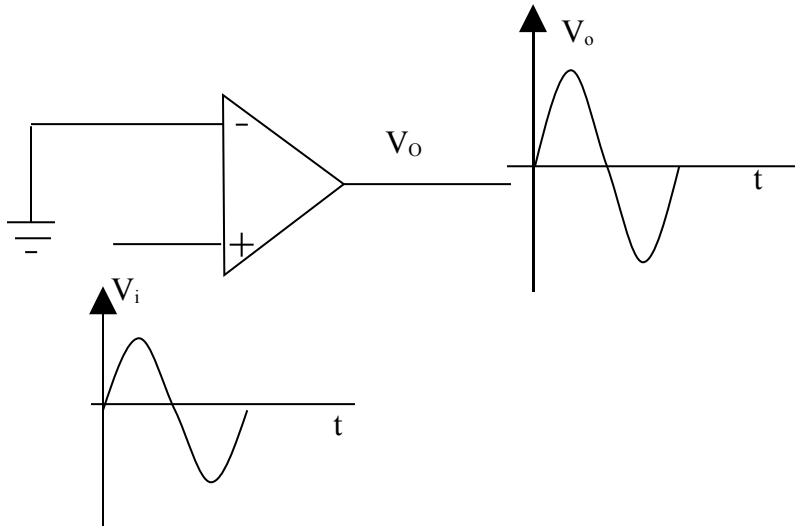

Fig.3 Op-Amp in Non-inverting mode

The output voltage $V_o = AV_i$ is amplified and in-phase with the input signal.

- If two different voltages V_1 and V_2 are applied to an ideal Op-Amp as shown below.

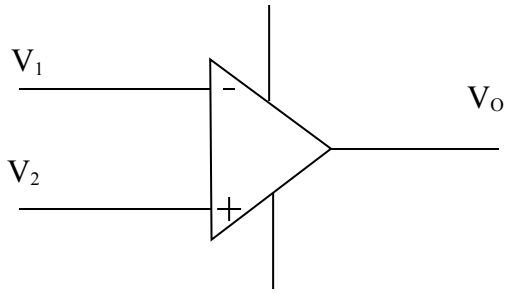

Fig.4 Ideal Op-Amp

The output voltage will be $V_o = A(V_1 - V_2)$

i.e the difference of the tow volatages is amplified. Hence an Op-Amp is also called as a High gain differential amplifier.

Note: Op-Amp is 8 pin IC (named as µA 741) with pin details as shown.

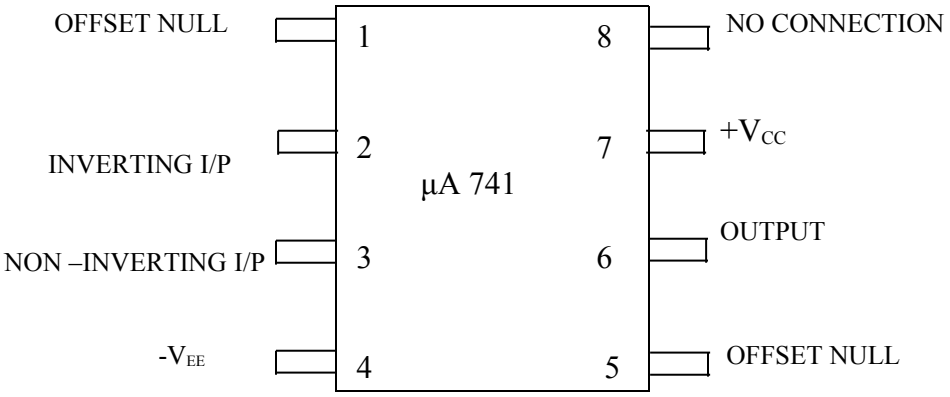

Fig. 5 Pin details of Op-Amp

Block Diagram of an Op-AMP

An Op-Amp consists of four blocks cascaded as shown above

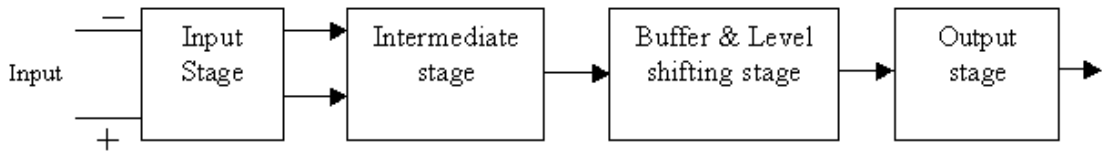

Fig. 6 Block diagram of an Op-Amp

Input stage: It consists of a dual input, balanced output differential amplifier. Its function is to amplify the difference between the two input signals. It provides high differential gain, high input impedance and low output impedance.

Intermediate stage: The overall gain requirement of an Op-Amp is very high. Since the input stage alone cannot provide such a high gain. Intermediate stage is used to provide the required additional voltage gain.

It consists of another differential amplifier with dual input, and unbalanced (single ended) output

Buffer and Level shifting stage

As the Op-Amp amplifies D.C signals also, the small D.C. quiescent voltage level of previous stages may get amplified and get applied as the input to the next stage causing distortion the final output.

Hence the level shifting stage is used to bring down the D.C. level to ground potential, when no signal is applied at the input terminals. Buffer is usually an emitter follower used for impedance matching.

Output stage- It consists of a push-pull complementary amplifier which provides large A.C. output voltage swing and high current sourcing and sinking along with low output impedance.

Concept of Virtual ground

We know that , an ideal Op-Amp has perfect balance (ie output will be zero when input voltages are equal).

Hence when output voltage $V_o = 0$, we can say that both the input voltages are equal ie $V_1 = V_2$.

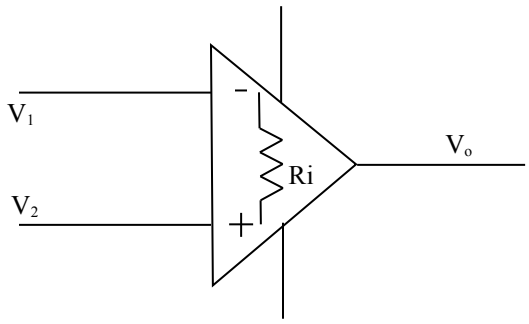

Fig. 7(a) Concept of Virtual ground

Since the input impedances of an ideal Op-Amp is infinite (R_i =). There is no current flow between the two terminals.

Hence when one terminal (say V_2) is connected to ground (ie $V_2 = 0$) as shown.

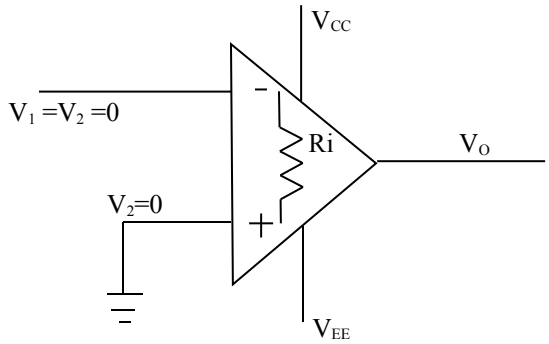

Fig. 7(b) **Concept of Virtual ground**

Then because of virtual ground V_1 will also be zero.

Applications of Op-Amp

An Op-Amp can be used as

1. Inverting Amplifer
2. Non-Iverting Amplifer
3. Voltage follower
4. Adder (Summer)
5. Integrator
6. Differentiator

Definitions

1. **Slewrate(S):** It is defined as " The rate of change of output voltage per unit time"

$$s = \frac{dV_O}{dt} \qquad volts/\mu \text{ sec}$$

Ideally slew rate should be as high as possible.But its typical value is s=0.5 V/μ-sec.

2. **Common Mode Rejection Ratio(CMRR):** It is defined as " The ratio of differential voltage gain to common-mode voltage gain".

$$CMRR = \frac{A_d}{A_{CM}}$$

Ideally CMRR is infinite, but its typical value is CMRR = 90 dB

3. **Open Loop Voltage Gain (A_V):** It is the ration of output voltage to input voltage in the absence of feed back.

   Its typical value is $A_V = 2x10^5$

4. **Input Impedance (R_i):**It is defined as " The impedance seen by the input(source) applied to one input terminal when the other input terminal is connected to ground.

   Ri ≈ 2MΩ

5. **Output Impedance (R_O):** It is defined as " The impedance given by the output (load) for a particular applied input".

   Ro ≈ 75Ω

Note: Typical values given above are for Op-Amp IC=μA741

Characteristics of an Ideal Op-Amp

An ideal Op-Amp has the following characteristics.

1. Infinite voltage gain (ie $A_V = \infty$)
2. Infinite input impedance ($R_i = \infty$)
3. Zero output impedance(R_o=0)
4. Infinite Bandwidth (B.W. = C
5. Infinite Common mode rejection ratio (ie CMRR =∞)
6. Infinite slew rate (ie S=∞)
7. Zero power supply rejection ratio (PSRR =0)ie output voltage is zero when power supply V_{CC} =0
8. Zero offset voltage(ie when the input voltages are zero, the output voltage will also be zero)
9. Perfect balance (ie the output voltage is zero when the input voltages at the two input terminals are equal)
10. The characteristics are temperature independent.

Inverting Amplifier

An inverting amplifier is one whose output is amplified and is out of phase by 180^0 with respect to the input

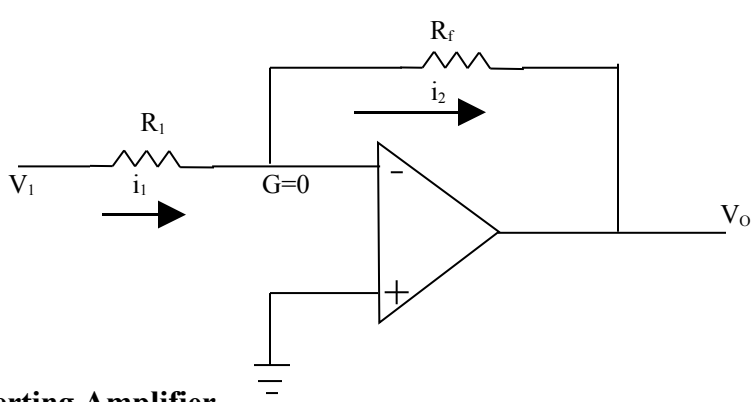

Fig.8 Inverting Amplifier

The point "G" is called virtual ground and is equal to zero.

By KCL we have

$$i_1 = i_2$$

$$\frac{V_i - 0}{R_1} = \frac{0 - V_o}{R_f}$$

$$\frac{V_i}{R_1} = -\frac{V_o}{R_f}$$

$$V_O = -\left(\frac{R_f}{R_1}\right)V_i$$

Where $\frac{R_f}{R_1}$ is the gain of the amplifier and negative sign indicates that the output is inverted with respect to the input.

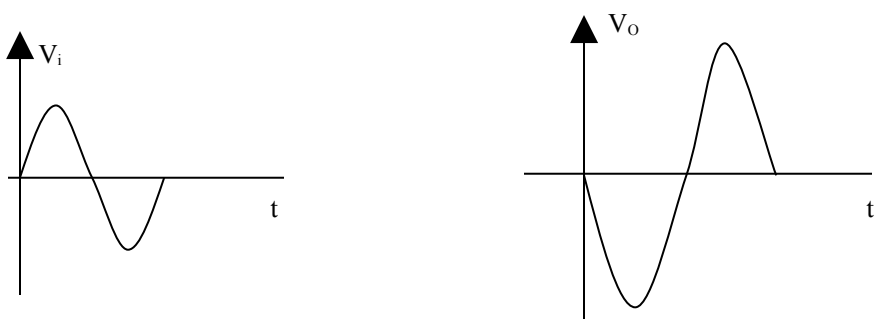

<u>Fig. 9 Waveforms of Inverting Amplifers</u>

2. Non- Inverting Amplifier

A non-inverting amplifier is one whose output is amplified and is in-phase with the input.

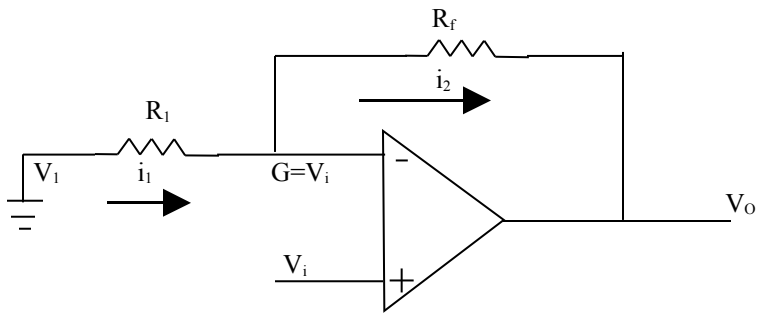

Fig.10 Non Inverting Amplifiers

By KCL we have

$$i_1 = -i_2$$

$$\frac{V_i - 0}{R_1} = -\frac{V_i - V_O}{R_f}$$

$$\frac{V_i}{R_1} = \frac{V_O - V_i}{R_f}$$

$$\frac{V_0 - Vi}{V_i} = \frac{R_f}{R_1}$$

$$\frac{V_O}{V_i} - 1 = \frac{R_f}{R_1}$$

$$\frac{V_O}{V_i} = 1 + \frac{R_f}{R_i}$$

$$V_0 = \left(1 + \frac{R_f}{R_1}\right) V_i$$

Where $\left(1 + \frac{R_f}{R_1}\right)$ is the gain of the amplifier and + sign indicates that the output is in-phase with the input.

3. Voltage follower

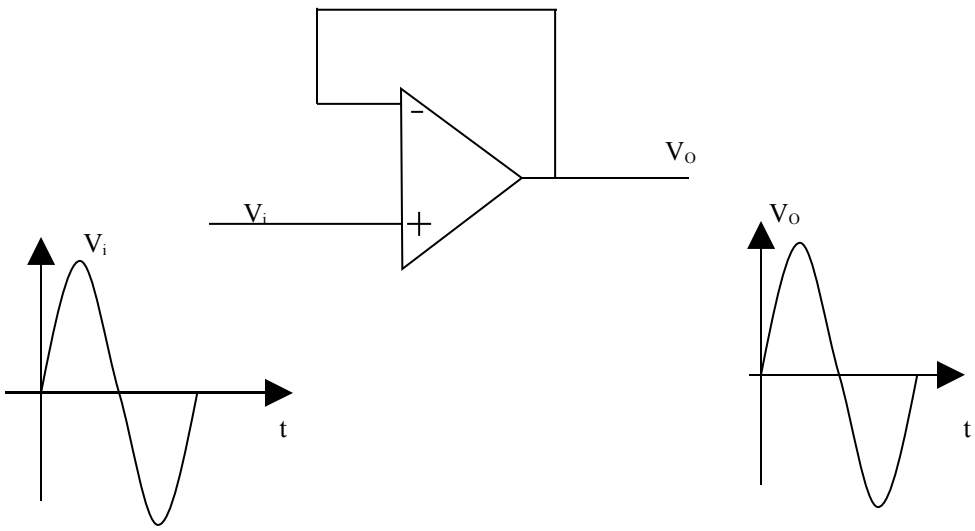

<u>Fig. 11 Voltage follower</u>

Voltage follower is one whose output is equal to the input.

The voltage follower configuration shown above is obtained by short circuiting "R_f" and open circuiting "R_1" connected in the usual non-inverting amplifier.

Thus all the output is fed back to the inverting input of the op-Amp.

Consider the equation for the output of non-inverting amplifer

$$V_0 = \left(1 + \frac{R_f}{R_1}\right)V_i$$

When $R_f = 0$ short circuiting
$R_1 = \infty$ open circuiting

$$V_O = \left(1 + \frac{0}{\infty}\right)V_i$$

$$\therefore \quad V_O = V_i$$

Therefore the output voltage will be equal and in-phase with the input voltage. Thus voltage follower is nothing but a non-inverting amplifier with a voltage gain of unity.

4. Inverting Adder

Inverting adder is one whose output is the inverted sum of the constituent inputs

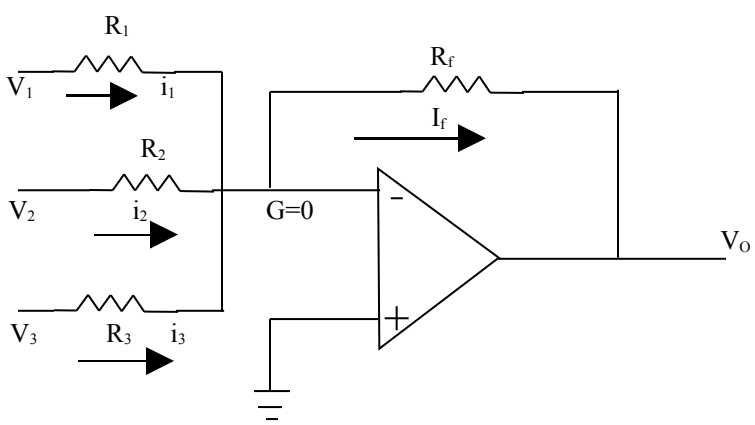

Fig.12. Inverting Adder

By KCL we have

$$i_f = i_1 + i_2 + i_3$$

$$\frac{0 - V_O}{R_f} = \frac{V_1 - 0}{R_1} + \frac{V_2 - 0}{R_2} + \frac{V_3 - 0}{R_3}$$

$$\frac{V_O}{R_f} = \frac{V_1}{R_1} + \frac{V_2}{R_2} + \frac{V_3}{R_3}$$

$$V_O = -R_f\left[\frac{V_1}{R_1} + \frac{V_2}{R_2} + \frac{V_3}{R_3}\right]$$

If $R_1 = R_2 = R_3 = R$ then

$$V_O = -\frac{R_f}{R}\left[V_1 + V_2 + V_3\right]$$

If $R_f = R$ then

$V_O = -[V_1 + V_2 + V_3]$

Hence it can be observed that the output is equal to the inverted sum of the inputs.

5. Integrator

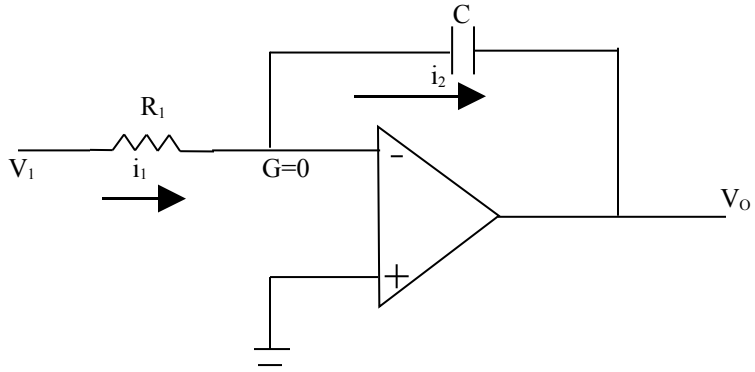

Fig, 13 Integrator

An integrator is one whose output is the integration of the input.,
By KCL we have,

$$i_1 = i_2 \text{ - - - - - - - - - - - - - - - - - - } 1$$

From the above figure we have

$$i_1 = \frac{V_i - 0}{R} = \frac{V_i}{R} \text{ - - - - - - - - - - - - } 2$$

and similarly we have

$$0 - V_O = \frac{1}{C}\int i_2 dt$$

$$V_O = -\frac{1}{C}\int i_2 dt$$

$$\frac{dV_O}{dt} = -\frac{1}{C} i_2$$

$$i.e.\ i_2 = -C\frac{dV_O}{dt} \text{ - - - - - - - - - - - - - - } 3$$

substituing 2 *and* 3 *in* 1 *we have*

$$\frac{V_i}{R} = -C\frac{dV_O}{dt}$$

$$\frac{dV_O}{dt} = -\frac{1}{RC} V_i$$

$$\therefore\ V_O = -\frac{1}{RC}\int V_i dt$$

Differentiator

A differentiator is one whose output is the differentiation of the input

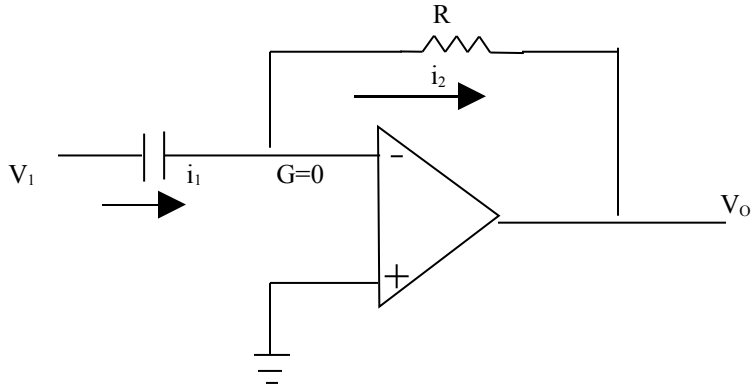

By KCL we have

$$i_1 = i_2 \text{ - - - - - - - - - - - - - - - - - 1}$$

From the above figure we have

$$V_i = \frac{1}{C}\int i_1 dt$$

$$\frac{dV_i}{dt} = \frac{1}{C} i_1$$

$$i_1 = C.\frac{dV_i}{dt} \text{ - - - - - - - - - - - - - - 2}$$

and similarly we have

$$i_2 = \frac{0 - V_O}{R} = -\frac{V_O}{R} \text{ - - - - - - - - - - 3}$$

substituting 2 *and* 3 *in* 1 *we have*

$$C\frac{dV_i}{dt} = -\frac{V_O}{R}$$

$$V_O = -RC\frac{dV}{dt}$$

Problems

1. For an inverting amplifer R_i=100KΩ and R_f=600KΩ. What is the output voltage for an input of -3V?

Soln:

Given: R_1=100KΩ
R_f=600KΩ
V_i=-3V
V_O=?

We have,

$$V_O = -\frac{R_f}{R_1}V_i$$

$$= \left[\frac{600 \times 10^3}{100 \times 10^3}\right] \times -3$$

$$V_O = 18\,V$$

2. Design an inverting amplifer for output voltage of -10V and an input voltage of 1V.

Soln:

Given: Vi=1 V
V_O= -10V

We Have,

$$V_O = -\left(\frac{R_f}{R_1}\right)V_i$$

$$-10 = -\left(\frac{R_f}{R_1}\right)1$$

$$\frac{R_f}{R_1} = 10 \quad or \quad R_f = 10R_1$$

$$Assuming \; R_1 = 1K\Omega \quad we\ have$$

$$R_f = 10K\Omega$$

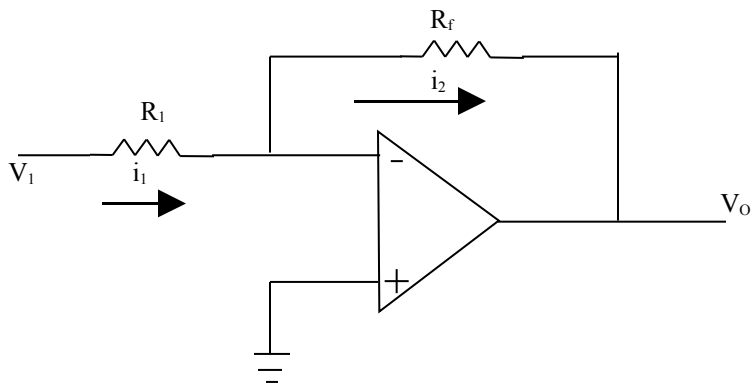

3. For an inverting amplifier R_1=10KΩ and V_i =1V. Calculate $i_1$and V_O.
Soln:

Given: R_1 = 10KΩ, R_f=100KΩ V_i=1 V

We have,

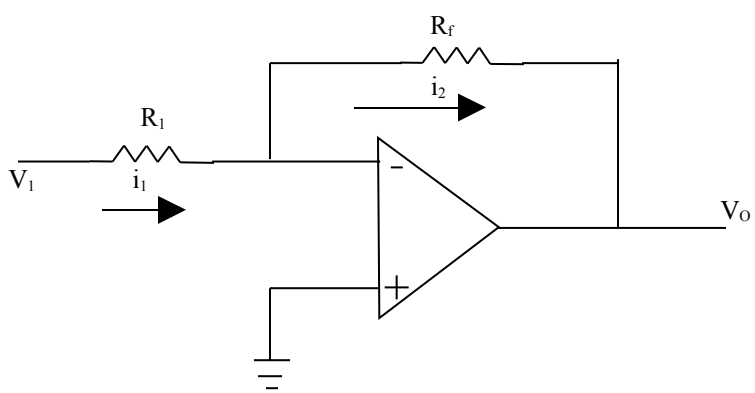

$$i_1 = \frac{V_i - 0}{R_1} = \frac{1}{10 \times 10^3} = 0.1\, mA$$

$$V_O = -\left(\frac{R_f}{R_1}\right)V_i = -\left[\frac{100 \times 10^3}{10 \times 10^3}\right] \times 1 = -10\, V$$

4. Desing an amplifier with a gain of +9 and R_f =12 KΩ using an op-Amp
Soln:
Since the gain is positive:
Choose a non-inverting amplifier

Then we have,

$$V_O = \left[1 + \frac{R_f}{R_1}\right]V_i$$

Gain is,

$$1 + \frac{R_f}{R_1} = 9$$

$$\frac{R_f}{R_1} = 8$$

$$\therefore\ R_1 = \frac{R_f}{8} = \frac{12 \times 10^3}{8}$$

$$R_1 = 1.5\, K\Omega$$

6. **In the figure shown if V_1=+1V, V_2=+3V and V_3=+2V with R_1=R_2=R_3=2KΩ. Determine the output voltage.**

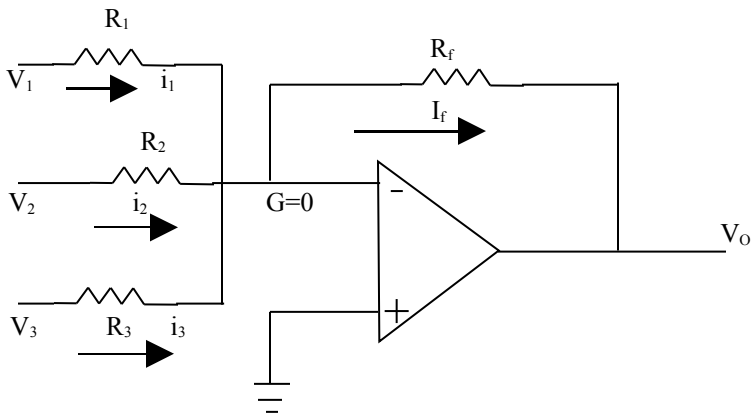

Soln: We have ,

$$V_O = -\frac{R_f}{R}[V_1 + V_2 + V_3]$$

$$V_O = -\frac{3\times 10^3}{2\times 10^3}[1+3+2]$$

$$V_O = -9\,V$$

7. Desing an Adder using Op-Amp to give the output voltage V_O= -[2V_1+3V_2+5V_3]

Soln:

Given $V_O = -[2V_1 + 3V_2 + 5V_3]$ - - - - - - - - - - - - - - 1

We Have,

$$V_O = -R_f\left[\frac{V_1}{R_1} + \frac{V_2}{R_2} + \frac{V_3}{R_3}\right]$$

$$V_O = -\left[\frac{R_f}{R_1}V_1 + \frac{R_f}{R_2}V_2 + \frac{R_f}{R_3}V_3\right] \text{ - - - - - - - - - - - - - - } 2$$

Equating eqn 1 and 2 we get,

$$\frac{R_f}{R_1} = 2 \quad ; \quad \frac{R_f}{R_2} = 3 \quad ; \quad \frac{R_f}{R_3} = 5$$

Assuming R_f =100KΩ, We get,

$$R_1 = \frac{R_f}{2} \therefore \quad R_1 = 50K\Omega$$

$$R_2 = \frac{R_f}{3} \quad \therefore \quad R_2 = 33.33K\Omega$$

$$R_3 = \frac{R_f}{5} \quad \therefore \quad R_3 = 20K\Omega$$

Note: If desing is asked after finding the values of R_f and R_1 circuit diagram should be written.

8.Design a summing amplifier to add three input voltages. The output of the amplifier should be twice the negative sum of the inputs.

<u>Soln</u>

$$V_O = -2(V_1 + V_2 + V_3)$$

$$we\ have \quad V_O = -\frac{R_f}{R}(V_1 + V_2 + V_3)$$

Equating we get,

$$\frac{R_f}{R} = 2 \quad \therefore \quad R_f = 2R$$

$$Let\ R = 10K\Omega \quad then\ R_f = 20K\Omega$$

9. A 5 mV peak voltage, 1 KHz signal is applied to the input of an Op-Amp integrator for which R=100KΩ and C=1μF. Find the output voltage.

Soln: Given R=100KΩ
C=1μF
V_m=5mV
F=1KHz
V_0=?

We have $V_i = V_m \text{Sinwt} = V_m \text{Sin}2\pi ft$

V_i=5sin200πt mV

For an integrator,

$$V_O = -\frac{1}{RC}\int V_i dt$$

on solving,

$$V_O = \frac{1}{40\pi}\cos 200\pi t \quad mV$$

10.The input to a differentiator is a sindusoidal voltage of peak value 5mV and frequency 2KHz . Find the output if R = 100KΩ and C=1μF.

Given:
$V_i = 5\sin 400\pi t \quad mV$

$$\textit{for differentiator} \quad V_O = -RC\frac{dV_i}{dt}$$

$$\textit{on solving} \quad V_O = -2000\pi \cos 4000\pi t \quad mV$$

CHAPTER 5

THEORY OF SINUSOIDAL OSCILLATORS

" An electronic device that generates sinusoidal oscillations of desired frequency is known as sinusoidal oscillator"

Types of Sinusoidal Oscillations

1. Damped Oscillations
2. Undamped Oscillations

1. **Damped Oscillations-**The electrical oscillations whose amplitude goes on decreasing with time are called damped oscillations.
2. **Undamped Oscillations-** The electrical oscillations whose amplitude remains constant with time are called undamped oscillations.

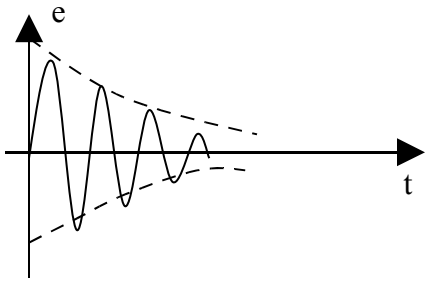

fig. Damped oscillations

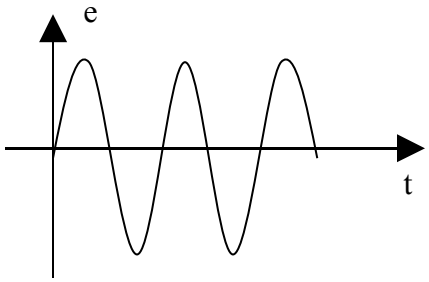

fig. Undamped oscillations

Oscillatory circuit

A circuit, which produces electrical oscillations of any desired frequency, is known as an oscillatory circuit or tank circuit.

A simple oscillatory circuit consists of a capacitor C and inductance coil L in parallel as shown in figure below. This electrical system can produce electrical oscillations of frequency determined by the values of L and C.

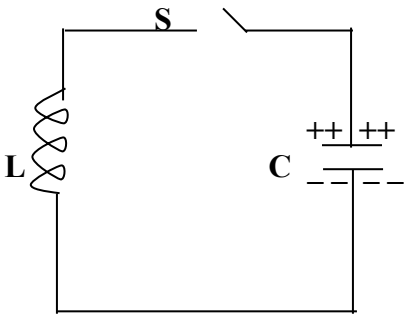

Fig.1

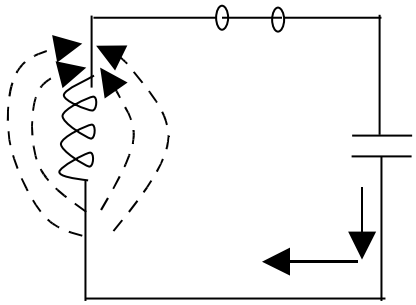

Fig. 2

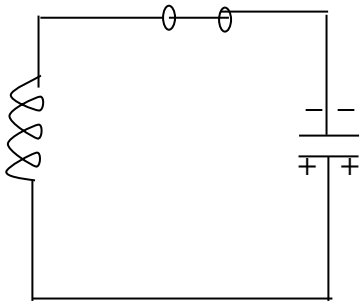

Fig. 3

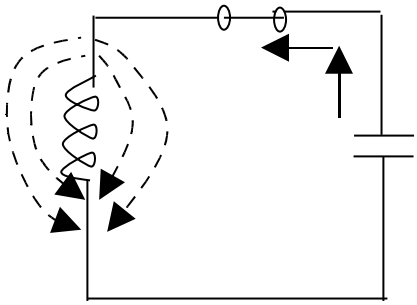

Fig. 4

Circuit operations- Assume capacitor is charged from a d. c. source with a polarity as shown in figure 1.

- When switch S is closed as shown in fig.ii, the capacitor will discharge through inductance and the electron flow will be in the direction indicated by the arrow. This current flow sets up magnetic field around the coil. Due to the inductive effect, the current builds up slowly towards a maximum value. The circuit current will be maximum when the capacitor is fully discharged. Hence the electrostatic energy across the capacitor is completely converted into magnetic field energy around the coil.

- Once the capacitor is discharged, the magnetic field will begin to collapse and produce a counter emf. According to Lenz's law the counter emf will keep the current flowing in the same direction. The result is that the capacitor is now charged with opposite polarity making upper plate of capacitor –ve and lower plate +ve as shown in fig. 3.
- After the collapsing field has recharged the capacitor, the capacitor now begins to discharge and current now flows in the opposite direction as shown in fig. iv.
- The sequence of charge and discharge results in alternating motion of electrons or an oscillating current. The energy is alternately stored in the lectric field of the capacitor C and the magnetic field of the inductance coil L . This interchange of energy between L and C is repeated over and again resulting in the production of Oscillations.

Waveform- In practical tank circuit there are resistive and radiation losses in the coil and dielectric losses in the capacitor. During each cycle a small part of the originally imparted energy is used up to overcome these losses. The result is that the amplitude of oscillating current decreases gradually and eventually it become zero. Therefore tank circuit produces damped oscillations.

Frequency of oscillations- The expression for frequency of oscillation is given by,

$$f_r = \frac{1}{2\pi\sqrt{LC}} \text{----------(1)}$$

Undamped Oscillations from Tank Circuit

A tank circuit produces damped oscillations. In practice we need continuous undamped oscillations for the successful operation of electronics equipment. In order to make the oscillations in the tank circuit undamped it is necessary to supply correct amount of energy to the tank circuit at the proper time intervals to meet the losses.

The following conditions must be fulfilled;

1. The amount of energy supplied be such so as to meet the losses in the tank and the a.c. energy removed from the circuit by the load. For example if losses in LC circuit amount ot 5 mW and a.c. output being taken is 100 mW, then power of 105mW should be continuously supplied to the circuit.
2. The applied energy should have the same frequency as the of the oscillations in the tank circuit.
3. The applied energy should be in phase with the oscillations set up in the tank circuit.

<u>Positive feedback Amplifier-Oscillator</u>

1. A transistor amplifier with proper +ve feedback can act as an oscillator.

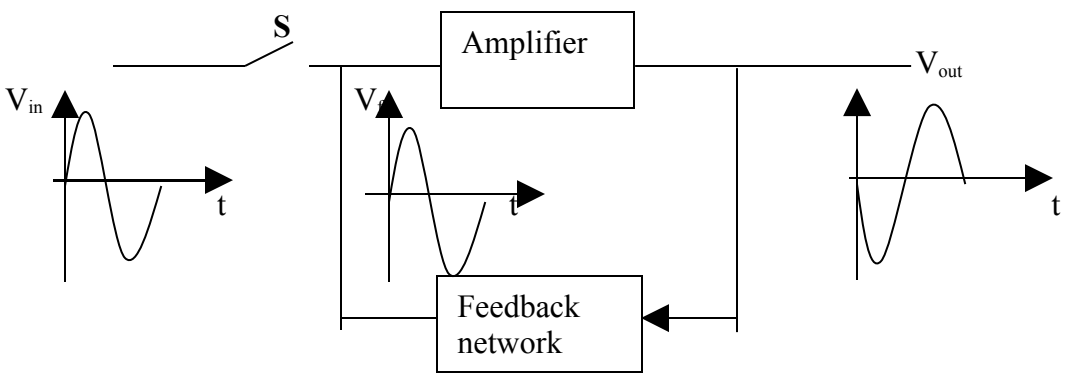

2. The circuit needs only a quick trigger signal to start the oscillations. Once the oscillations have started, no external signal source is necessary.
3. In order to get continuous undamped output from the circuit, the following condition must be met;

   $m_v A_V = 1$

   where A_V = voltage gain of amplifier without feedback.

   m_v = feedback fraction.

   This relation is also called Barkhausen criterion

Essentials of Transistor Oscillator

Fig. below shows the block diagram of an oscillator. Its essential components are:

1. Tank Circuit: It consists of inductance coil(L) connected in parallel with capacitor(C). The frequency of oscillations in the circuit depends upon the values of inductance of the coil and capacitance of the capacitor.
2. Transistor Amplifier: The transistor amplifier receives d.c. power from the battery and changes it into a.c. power for supplying to the tank circuit. The oscillations occurring in the tank circuit are applied to the input the transistor amplifer. The output of the transistor can be supplied to the tank circuit to meet the losses.
3. Feedback circuit: The feedback circuit supplies a part of collector energy to the tank circuit in correct phase to aid the oscillations. ie. provides positive feedback.

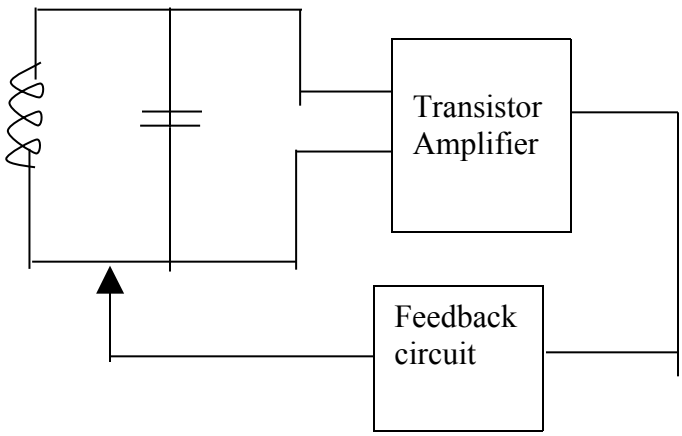

Fig. Block diagram of Transistor Oscillator

Types of Transistor Oscillators

1. Hartley Oscillator
2. Colpitt's Oscillator
3. Phase Shift Oscillator
4. Tuned Collector Oscillator
5. Wein Bridge Oscillator
6. Crystal Oscillator

1. Hartley Oscillator

The circuit diagram of Hartley Oscillator is as shown in figure below. It uses two inductors placed across common capacitor C and the center of two inductors ins tapped. The tank circuit is made up of L_1 , L_2 and C and is given by.

$$f = \frac{1}{2\pi\sqrt{L_T C}} \text{ ----------(2)}$$

where $L_T = L_1 + L_2 + 2M$

M= Mutual inductance between L_1 and L_2

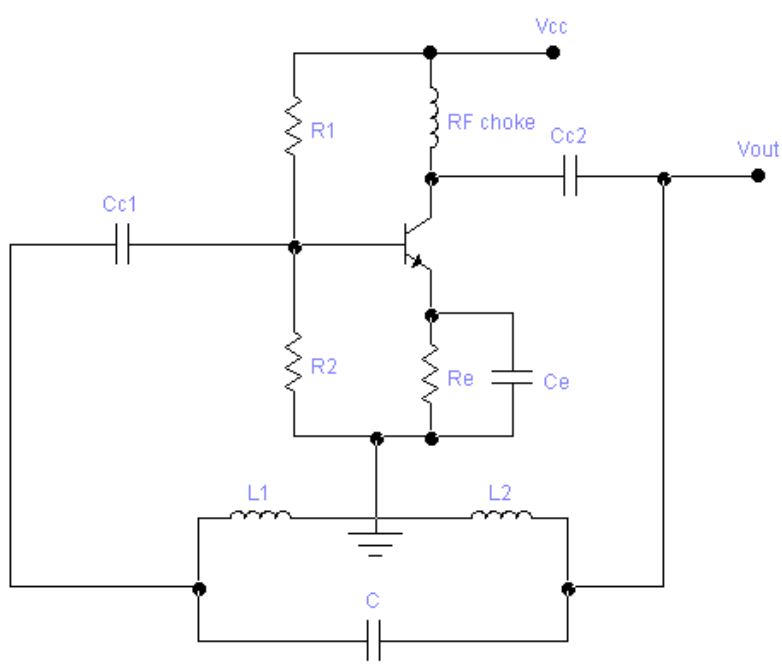

Figure: Circuit diagram of Hartley Oscillator

- When the circuit is turned ON, the capacitor is charged. When this capacitor is fully charged, it discharges through coils L_1 and L_2 setting up oscillations of frequency determined by expression 1. The output voltage of the amplifier appears across L_2 and feedback voltage across L_1. The voltage across L_1 is 180^0 out of phase with the voltage developed across L_2.
- A phase shift of 180^0 is produced by the transistor and a further phase shift of 180^0 is produced by L_1-L_2 voltage divider circuit. In this way feedback is properly phased to produce continuous undamped oscillations.

Feedback fraction- In Hartley oscillator the feedback voltage is across L_1 and output voltage is across L_2.

Therefore feedback fraction $$m_v = \frac{v_f}{v_{out}} = \frac{X_{L1}}{X_{L2}} = \frac{L_1}{L_2} \text{ ----------(3)}$$

2. Colpitt's Oscillator

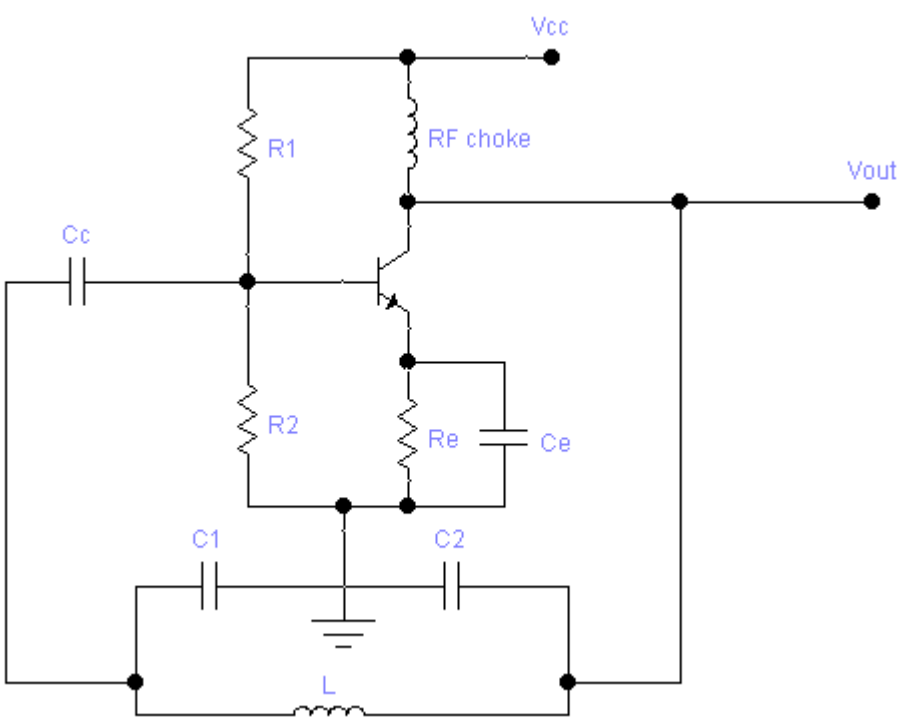

Figure: Circuit diagram of Colpitt's Oscillator

- The tank circuit is made up of C_1, C_2 and L. The frequency of oscillations is determined by:

$$f = \frac{1}{2\pi\sqrt{LC_T}}$$

$$\text{where } C_T = \frac{C_1 C_2}{C_1 + C_2} \qquad \text{----------(4)}$$

- When the circuit is turned ON, the capacitor C_1 and C_2 are charged. The capacitors discharge through L setting up oscillations of frequency determined by expression. 1. The output voltage appears across C_2 and feedback voltage is developed across C_1. The voltage across C_1 is 180^0 out of phase with the voltage developed across C_2 (V_{out}). A phase shift of 180^0 is produced by the transistor and a further phase shift of 180^0 is produced by C_1-C_2 voltage divider. In this way feedback is properly phased to produce continuous undamped oscillations.

Feedback factor

Feedback factor $m_v = \frac{V_f}{V_{out}} = \frac{X_{C1}}{X_{C2}} = \frac{C_2}{C_1}$ ----------(5)

Demerits of Oscillator using Tank Circuit

1. They suffer for frequency instability and poor waveform
2. They cannot be used to generate low frequencies, since they become too-much bulky and expensive too.

3. RC Phase Shift Oscillator

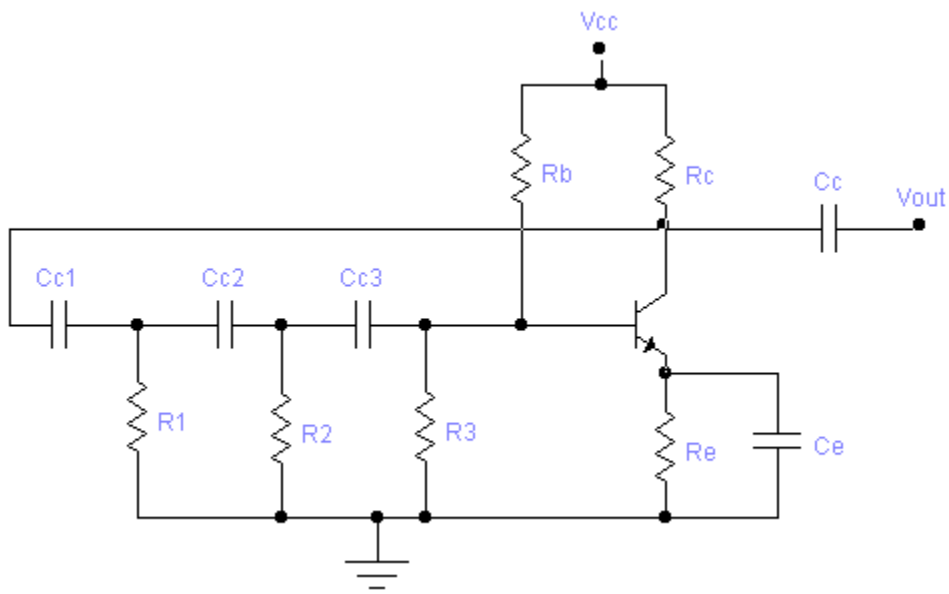

Figure: Circuit diagram of RC phase shift Oscillator

- It consists of a conventional single transistor amplifier and a RC phase shift circuit. The RC phase shift circuit consists of three sections R_1C_1, R_2C_2, and R_3C_3.At some particular frequency f_0 the phase shift in each RC section is 60^0 so that the total phase shift produced by the RC network is 180^0. The frequency of oscillation is given by

$$f_o = \frac{1}{2\pi RC\sqrt{6}} \text{----------(6)}$$

- When the circuit is switched ON it produces oscillations of frequency determined by equation 1. The output E_O of the amplifier is feedback to RC feedback network. This network produces a phase shift of 180^0 and the transistor gives another 180^0 shift. Thereby total phase shift of the output signal when fed back is 360^0

Merits-

1. They do not require any transformer or inductor thereby reduce the cost.
2. They are quite useful in the low frequency range where tank circuit oscillators cannot be used.
3. They provide constant output and good frequency stability.

Demerits –

1. It is difficult to start oscillations.
2. The circuit requires a large number of components.
3. They cannot generate high frequencies and are unstable as variable frequency generators.

Transistor Crystal Oscillator

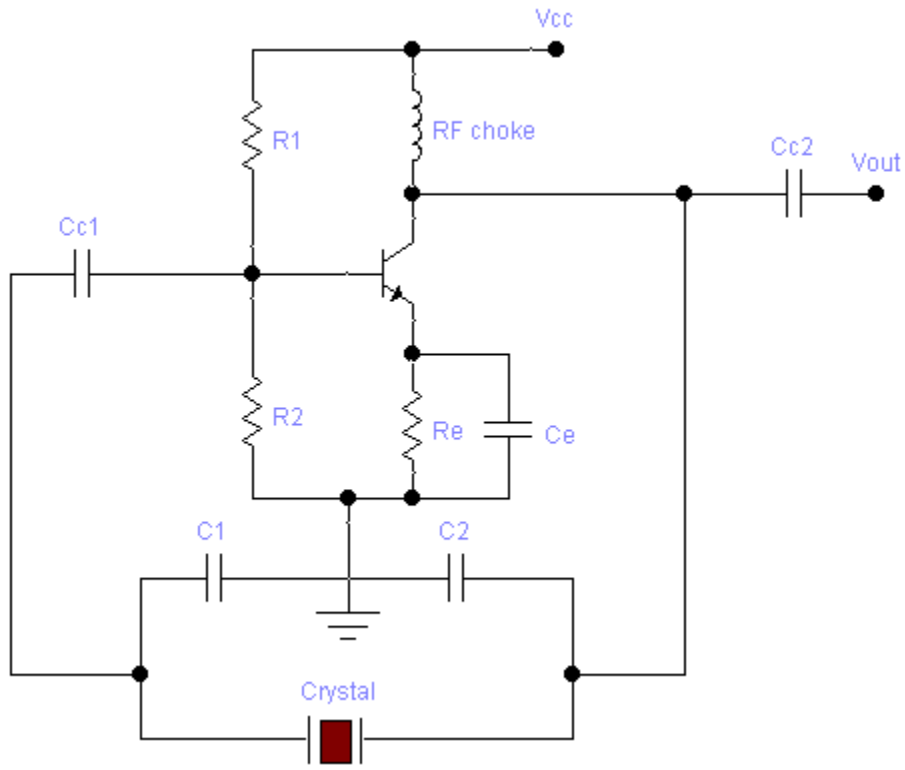

Figure: Circuit diagram of Transistor crystal oscillator

- Figure shows the transistor crystal oscillator. The crystal will act as parallel – tuned circuit. At parallel resonance, the impedance of the crystal is maximum. This means that there is a maximum voltage drop across C_2. This in turn will allow the maximum energy transfer through the feedback network.

- The feedback is +ve. A phase shift of 180^0 is produced by the transistor. A further phase shift of 180^0 is produced by the capacitor voltage divider. This oscillator will oscillate only at f_p.

  Where f_p = parallel resonant frequency ie the frequency at which the vibrating crystal behaves as a parallel resonant circuit.

$$f_p = \frac{1}{2\pi\sqrt{LC_T}}$$

----------(7)

$$where\ C_T = \frac{CC_m}{C + C_m}$$

Advantages

1. Higher order of frequency stability
2. The Q-factor of the crystal is very high.

<u>Disadvantages</u>

1. Can be used in low power circuits.
2. The frequency of oscillations cannot be changed appreciably.

CHAPTER 6

COMMUNICATION SYSTEMS

Radio Broadcasting, Transmission and Reception

Radio communication means the radiation of radio waves by the transmitting station, the propagation of these waves through space and their reception by the radio receiver.

Fig. below shows the general principle of radio broadcasting, transmission and reception. It essentially consists of transmitter, transmission of radio waves and radio receiver.

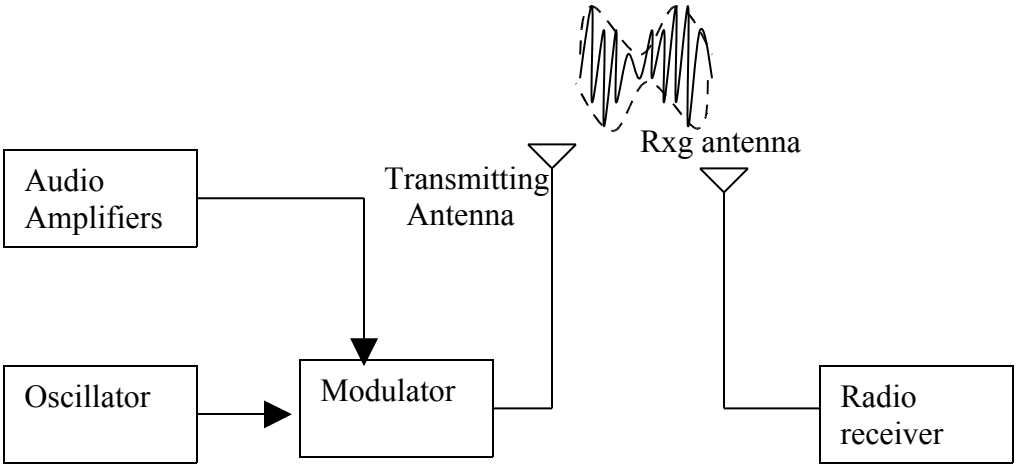

Figure: Block diagram of Communication system

Transmitter-

It essentially consists of microphone, audio amplifiers, oscillator and modulator.

A microphone is a device which converts sound waves into electrical waves. The output of microphone is fed to multistage audio amplifier for raising the strength of weak signal.

The job of amplification is performed by cascaded audio amplifiers. The amplified output from the last audio amplifier is fed to the modulator for rendering the process of modulation.

The function of the oscillation is to produce a high frequency signal called a carrier wave. Usually crystal oscillator is used for the purpose.

The amplified audio signal and carrier waves are fed to the modulator. Here the audio signal is superimposed on the carrier wave in suitable manner. The resultant waves are called modulated waves, and the process is called modulation. The process of modulation permits the transmission of audio signal at the carrier signal (frequency). As the carrier frequency is very high, therefore the audio signal can be transmitted to large distances. The radio waves from the transmitter are fed to the transmitting antenna or aerial from where these are radiated into space.

The transmitting antenna radiates the radio waves in space in all directions. These radio waves travel with the velocity of light $3x10^8$m/sec. The radio waves are electromagnetic waves and possess the same general properties.

Receiver-

On reaching the receiving antenna, the radio waves induce tiny emf in it. This small voltage is fed to the radio receiver. Here the radio waves are first amplified and then signal is extracted from them by the process of demodulation. The signal is amplified by audio amplifiers and then fed to the speaker for reproduction into sound waves.

Need for modulation

1. **Practical Antenna length-**theory shows that in order to transmit a wave effectively the length of the transmitting antenna should be approximately equal to the wavelength of the wave.

$$wavelength = \frac{Velocity}{frequency} = \frac{3 \times 10^8}{frequency\,(Hz)}\,metres$$

As the audio frequencies range from 20 Hz to 20Khz, if they are transmitted directly into space, the length of the transmitting antenna required would be extremely large. For example to radiate a frequency of 20 KHz directly into space we would need an antenna length of $3x10^8 /20x10^3 \approx 15{,}000$ meters. This is too long to be constructed practically.

2. **Operating Range-** The energy of a wave depends upon its frequency. The greater the frequency of the wave, the greater the energy possessed by it. As the audio signal frequencies are small, therefore these cannot be transmitted over large distances if radiated directly into space.

3. **Wireless communication-** Radio transmission should be carried out without wires.

Modulation- The process of changing some characteristics (example amplitude, frequency or phase) of a carrier wave in accordance with the intensity of the signal is known as modulation.

<u>Types of modulation-</u>

1. Amplitude modulation
2. Frequency modulation
3. Phase modulation

1. Amplitude modulation

When the amplitude of high frequency carrier wave is changed in accordance with the intensity of the signal, it is called amplitude modulation.

The following points are to be noted in amplitude modulation .

1. The amplitude of the carrier wave changes according to the intensity of the signal.
2. The amplitude variations of the carrier wave is at the signal frequency f_S.
3. The frequency of the amplitude modulated wave remains the same ie.carrier frequency f_C.

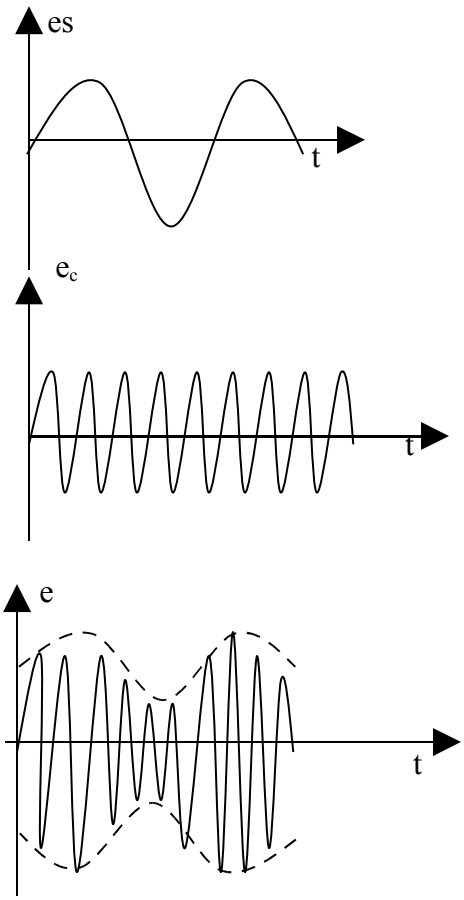

Figure: AM waveforms

Modulation factor

The ratio of change of amplitude of carrier wave to the amplitude of normal carrier wave is called modulation factor.

m=(amplitude change of carrier wave) / normal carrier wave(unchanged)

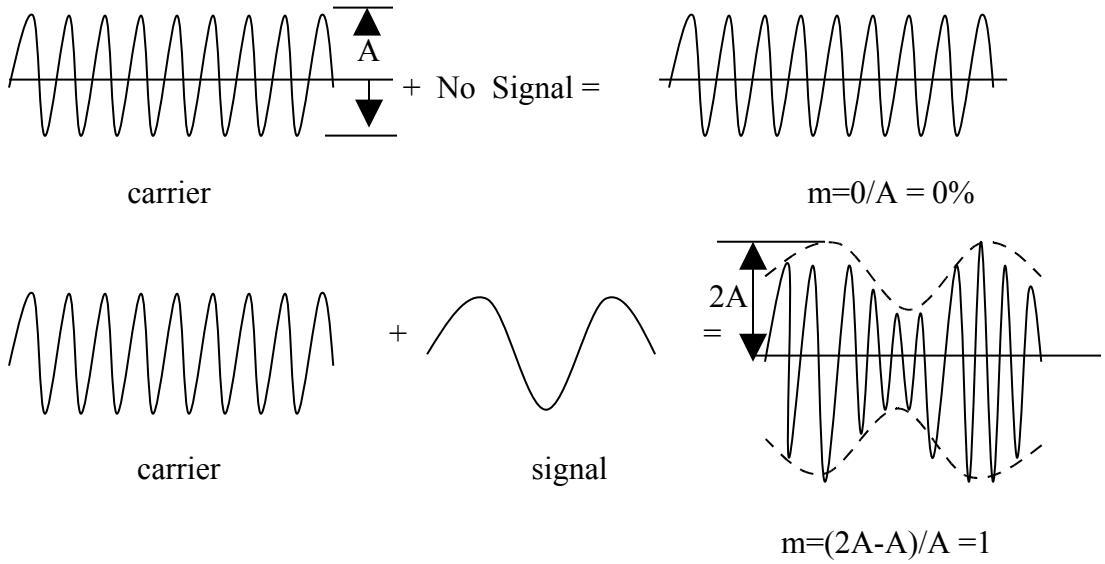

Modulation factor is very important since it determines the strength and quality of the transmitted signal. The greater the degree of modulation, the stronger and clearer will be the audio signal. It should be noted that if the carrier is overmodulated (ie m>1) distortion will occur at reception.

<u>Analysis of amplitude modulated wave</u>

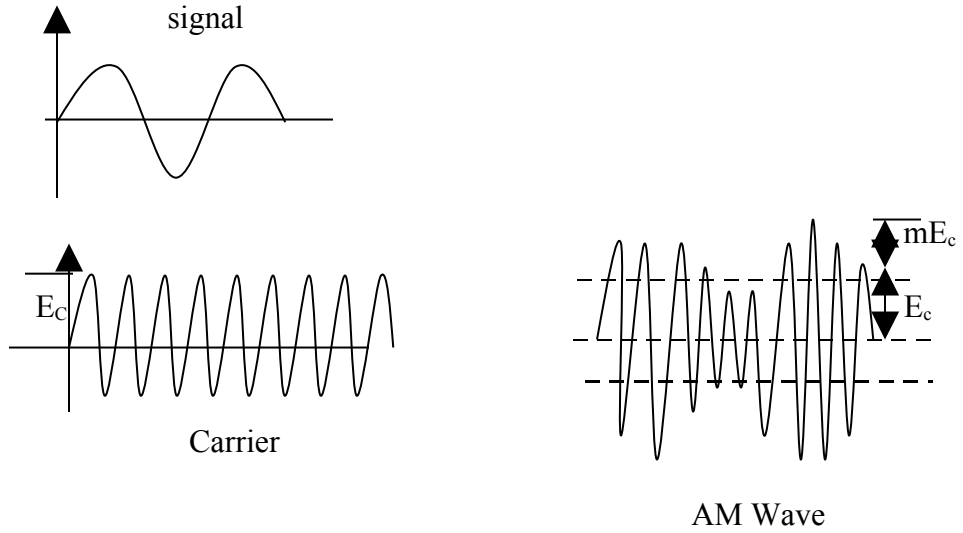

- A carrier wave is represented by $e_c = E_c \cos w_c t$----------(1)

  Where e_c ------instantaneous voltage of carrier.
  E_c -----amplitude of carrier.

- In amplitude modulation, the amplitude E_C of the carrier wave is varied in accordance with intensity of the signal as shown in figure.

- Suppose m=modulation index, then change in carrier amplitude $=mE_c$. Amplitude or E_{max} of the signal = mE_c.

  $e_s = mE_c \cos w_s t$----------(2)

  where mE_c is the amplitude of the signal.

  e_s ---------instantaneous voltage of the signal.

The amplitude of the carrier varies at signal frequency fs. Therefore the amplitude of AM wave is given by,

$$E_c + mE_c \cos w_s t = E_c(1 + m\cos w_s t)$$

- The instantaneous voltage of AM wave is,

  e = Amplitude x $\cos w_c t$

$$e = E_C(1 + m\cos w_s t)\cos w_c t$$
$$= E_C \cos w_c t + mE_C \cos w_s t \cos w_c t$$
$$= E_C \cos w_c t + \frac{mE_C}{2}[2\cos w_s t \cos w_c t]$$
$$= E_C \cos w_c t + \frac{mE_c}{2}[\cos(w_c + w_s)t + \cos(w_c - w_s)t]$$
$$\therefore e = E_C \cos w_c t + \frac{mE_c}{2}\cos(w_c + w_s)t + \frac{mE_c}{2}\cos(w_c - w_s)t \text{ - - - - - - - - - - - - (3)}$$

- The AM wave is equivalent ot thesummatoin of theree sinusoidal waves: aone having amplitude E_C and frequency f_c, the second having amplitde $mE_c/2$ and frequency $(f_c + f_s)$ and the third having amplitude $mE_c/2$ and frequency $f_c - f_s$..
- The AM wave consists three frequencies viz, f_c, f_c+f_s . The first frequency is the carrier frequency. Thus the process of modulation doesnot change the original carrier frequency but produces two new frequencies f_c+f_s and $f_c - f_s$. which are called sideband frequencies.

- In amplitude modulation the bandwidth is from $f_c - f_s$ to f_c+f_s ie $2f_s$ ie twice the signal frequency.
- Frequency spectrum of an amplitude modulated wave is shown in figure below.

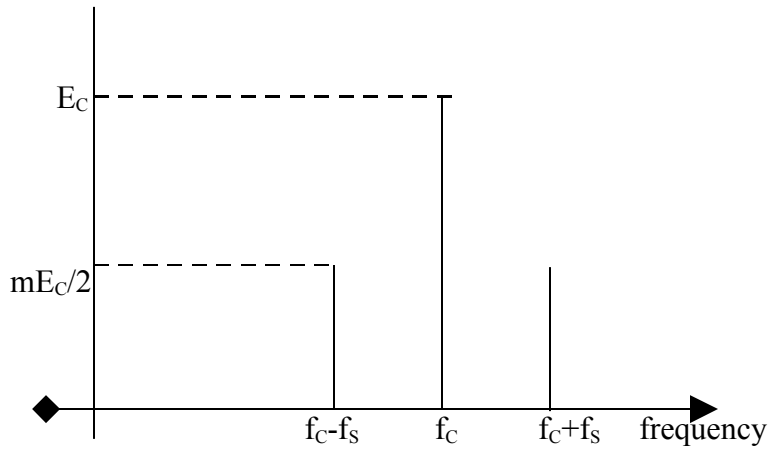

Figure: Frequency Spectrum of AM wave

Transistor AM modulator

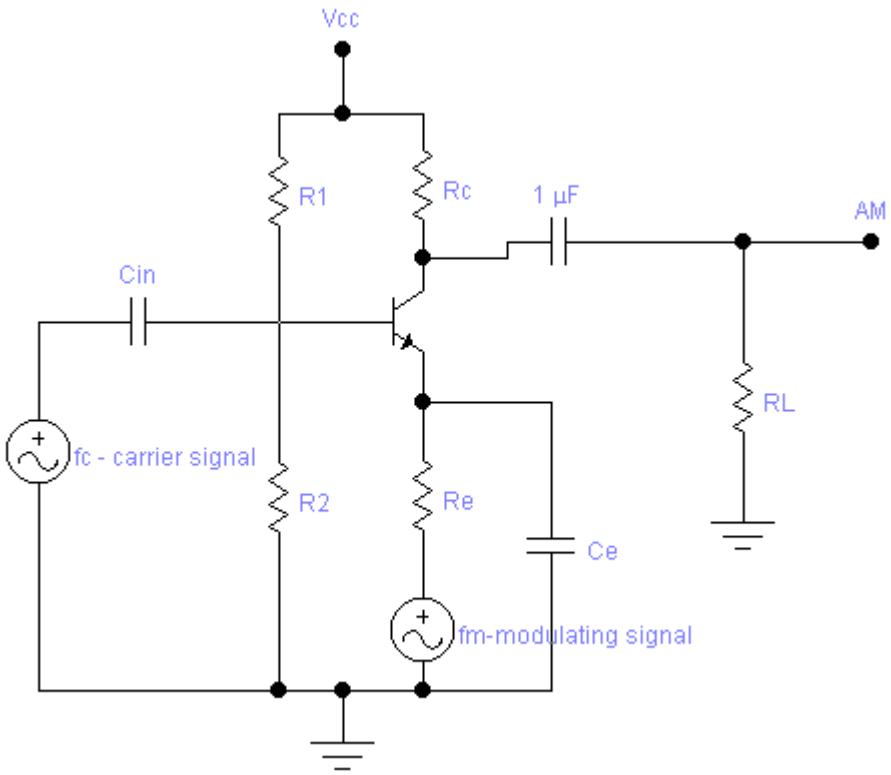

Figure: Transistor AM modulator

- A circuit which does amplitude modulation is called AM modulator.
- Fig. above shows the circuit of a simple AM modulator. It is essentially a CE amplifier having a voltage gain of A. The carrier signal is the input to the amplifier. The modulating signal is applied in the emitter resistance circuit.
- The amplifier circuit amplifies the carrier by a factor "A" so that the output is Ae_c. Since the modulating signal is part of the biasing circuit it produces low-frequency variations in the circuit. This in turn causes variations in "A". The result is that the amplitude of the carrier varies in accordance with the strength of the signal. The amplitude modulated output is obtained across R_L.

Power in AM wave

from equation (3),

$$carrier\ power\ P_C = \frac{\left(\frac{E_c}{\sqrt{2}}\right)^2}{R} = \frac{E_C^2}{2R} \text{ - - - - - - - - - - - (4)}$$

$$Total\ power\ of\ sidebands\ P_S = \frac{\left(\frac{mE_C}{2\sqrt{2}}\right)^2}{R} + \frac{\left(\frac{mE_C}{2\sqrt{2}}\right)^2}{R} = \frac{m^2E_C^2}{4R} \text{ - - - - - - - - (5)}$$

$$Total\ power\ of\ AM\ wave\ P_T = P_C + P_S$$

$$= \frac{E_C^2}{2R} + \frac{m^2E_C^2}{4R} = \frac{E_C^2}{2R}\left[1 + \frac{m^2}{2}\right]$$

$$= \frac{E_C^2}{2R}\left[\frac{2 + m^2}{2}\right] \text{ - - - - - - - - - - - - (6)}$$

Also fraction of total power carried by sidebands,

$$\frac{P_S}{P_T} = \frac{equn\ (5)}{equn\ (6)} = \frac{m^2}{2 + m^2} \text{ - - - - - - - - - - (7)}$$

<u>Limitations of Amplitude Modulation</u>

1. **Noisy Reception-** In an AM wave, the signal is in the amplitude variations of the carrier. Practically all the natural and man made noises consist of electrical amplitude disturbances. As a radio receiver cannot distinguish between amplitude variations that represent noise and those that contain the desired signal. Therefore reception is very noisy.

2. **Low efficiency-** In AM useful power is in the sidebands as they contain the signal. An AM wave has low sideband power.

   For example even if modulation is 100 % ie m=1.

$$\frac{P_S}{p_T} = \frac{m^2}{2+m^2} = \frac{1}{2+1} = 0.33$$

P_S=33% of P_T

Sideband power is only one-third of the total power of AM wave. Hence efficiency of this type of modulation is low.

3. **Lack of audio quality-** In order to attain high fidelity reception, all audio frequencies upto 15 Khz must be reproduced. This necessitates a bandwidth of 30 KHz since both sidebands must be reproduced ($2f_s$). But AM broadcasting stations are assigned with bandwidth of only 10 KHz to minimize the interference from adjacent broadcasting stations. This means that the highest modulating frequency can be 5 Khz which is hardly sufficient to reproduce the music properly.

<u>Frequency modulation</u>

“ When the frequency of carrier wave is changed in accordance with the intensity of the signal, it is called frequency modulation”.

- Here the amplitude of the modulated wave remains the same ie carrier wave amplitude.
- The frequency variations of carrier wave depend upon the instantaneous amplitude of the signal.
- When the signal approaches positive peaks as the B and F, the carrier frequency is increased to maximum and during negative peak, the carrier frequency is reduced to minimum as shown by widely spaced cycles.

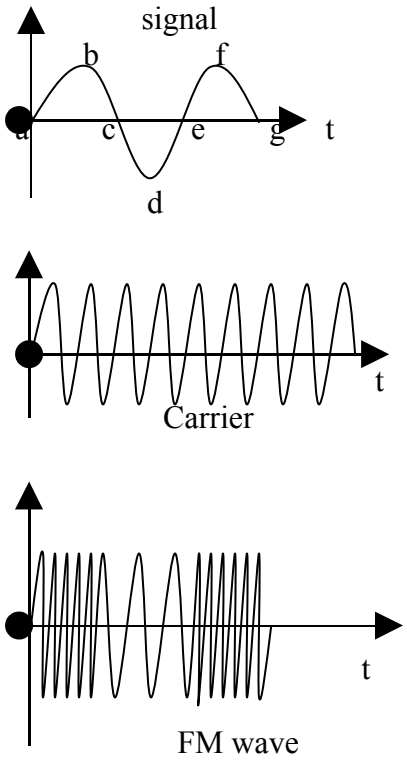

Advantages of FM

1. It gives noiseless reception.
2. The operating range is quite large.
3. The efficiency of transmission is very high.

Demodulation

The process of recovering the audio signal from the modulated wave is known as demodulation or detection.

At the broadcasting station, modulation is done to transmit the audio signal over larger distances. When the modulated wave is picked up the receiver, it is necessary to recover the audio signal from it. This process is accomplished in the radio receiver and is called demodulation.

AM diode detector

Fig. below shows a simple diode detector employing a diode and a filter circuit. A detector circuit performs the following two functions.

1. It rectifies the modulated wave.
2. It separates the audio signal from the carrier.

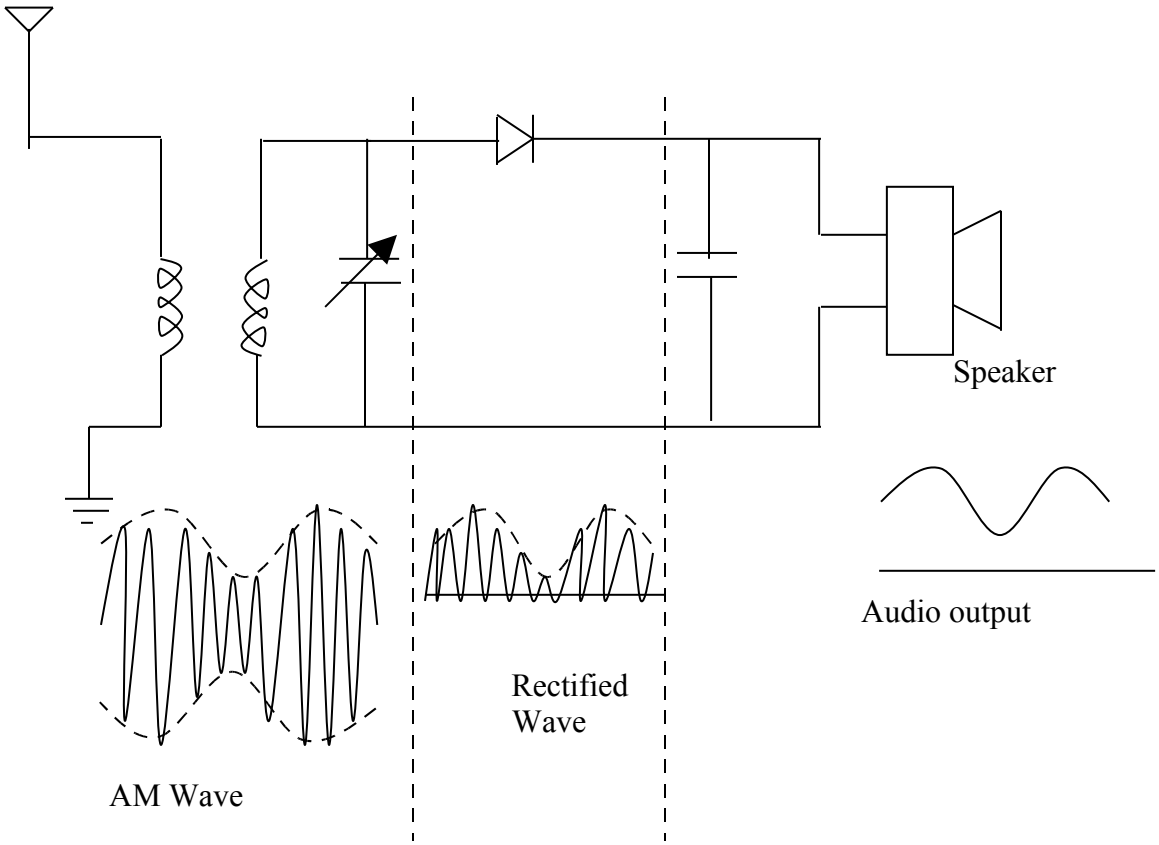

Figure: AM Diode detector

- The modulated wave of desired frequency is selected by the parallel tuned circuit L_1C_1 and is applied to the diode. During positive half cycles of the modulated wave the diode conducts, while during negative half cycles it doesnot. The result is the output of diode consists of positive half cycle of modulated wave as shown in figure.

- The rectified output consists of r.f. component and the audio signal which cannot be fed to the speaker for sound reproduction. The r.f. component is filtered by the capacitor 'C' shunted across the speaker. The value of 'C' is large enough to present low reactance to the r.f. component . f_c+f_s Therefore signal is passed to the speaker.

AM Radio Receiver

In order to reproduce the AM wave into sound waves, every radio receiver must perform the following functions.

1. The receiving aerial must intercept a portion of the passing radio waves.
2. The radio receiver must select the desired radio from a number of radio waves intercepted by the receiving aerial. For this purpose tuned parallel LC circuits must be used. These circuits will select only that radio frequency which is resonant with them.
3. The selected radio wave must be amplified by the tuned frequency amplifiers.
4. The audio signal must be recovered from the amplified radio wave.
5. The audio signal must be amplified by suitable number of audio-amplifiers.
6. The amplified audio signal should be fed to the speaker for sound reproduction.

Types of AM radio receivers

1. Straight Radio receiver
2. Superhetrodyne radio receiver

1. Straight Radio Receiver

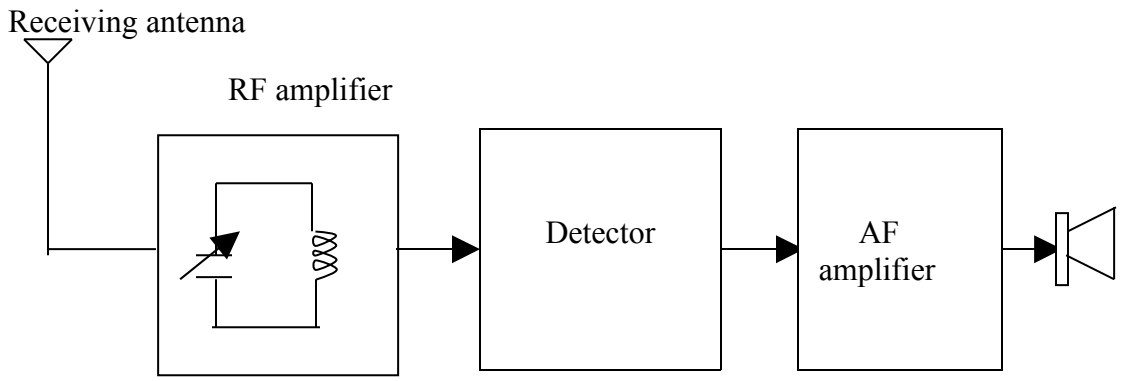

Figure: Straight Radio Receiver

- The Receiving antenna is receiving radio waves from different broadcasting stations. The desired radio wave is selected by the tuned RF amplifer which employs tuned parallel circuit. The selected radio wave is amplified by the rf amplifier.
- The amplified radio wave is fed to the detector circuit. This circuit extracts the audio signal from the radio wave. The output of the detector is the audio signal which is amplified by one or more stages of audio-amplifications. The amplified audio signal is fed the speaker for sound reproduction.

Limitations-

1. In straight radio receivers, tuned circuits are used. As it is necessary to change the value of a variable capacitors (gang capacitors) for tuning to the desired station, there is a considerable variation of Q between the closed and open positions of the variable capacitors. This changes the sensitivity and selectivity of the radio receivers.
2. There is too much interference of adjacent stations.

Superhetrodyne Receiver

Here the selected radio frequency is converted to a fixed lower value called intermediate frequency (IF). This is achieved by special electronic circuit called mixer circuit. The production of fixed intermediate frequency (455 KHz) is an important feature of superhetrodyne circuit. At this fixed intermediate frequency, the amplifier circuit operates with maximum stability, selectivity and sensitivity.

The block diagram of superhetrodyne receiver is a shown in figure below.

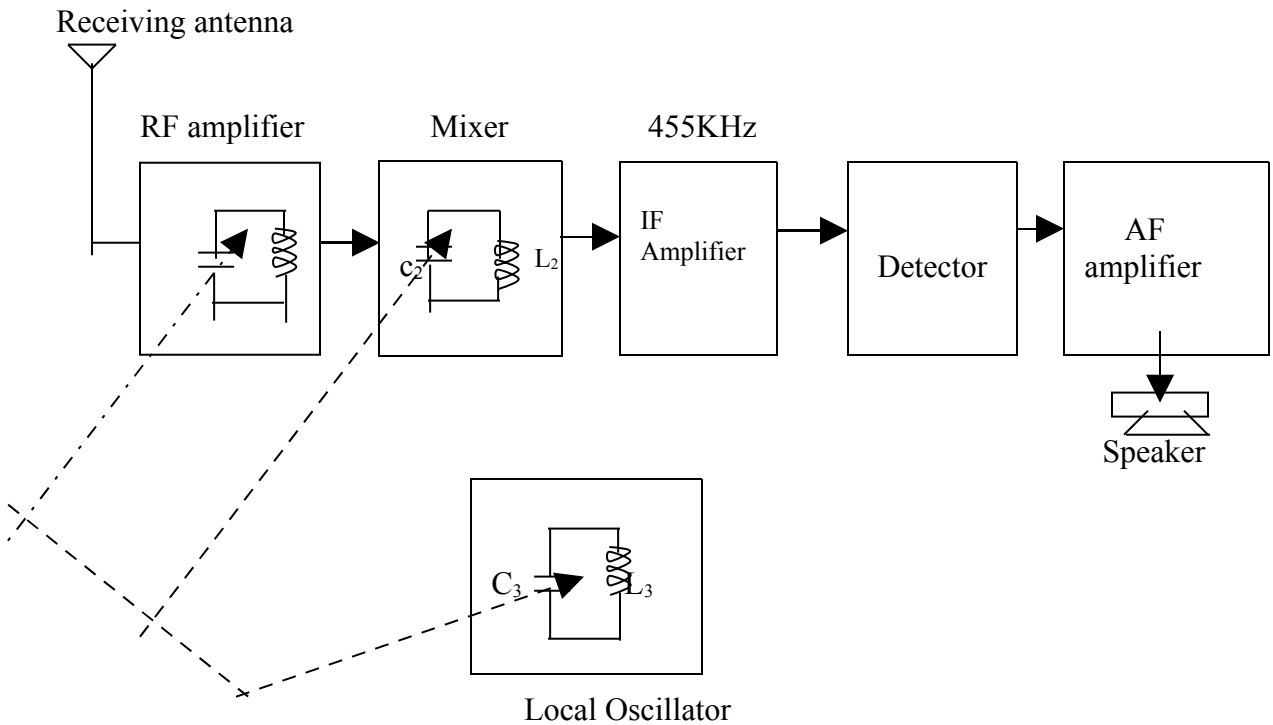

<u>Figure: Superhetrodyne Receiver</u>

1. **RF amplifier stage-** The RF amplifier stage uses a tuned parallel circuit L_1C_1 with a variable capacitor C_1. The radio waves from various broadcasting stations are intercepted by the receiving aerial and are coupled to this stage. This stage selects the desired radio wave and raises the strength of the wave to the desired level.

2. **Mixer stage-** The amplified output of RF amplifier is fed to the mixer stage where it is combined with the output of a local oscillator. The two frequencies beat together and produce an intermediate frequency (IF).

IF= Oscillator frequency –radio frequency

The IF is always 455 KHz regardless of the frequency to which the receiver is tuned. The reason why the mixer will always produce 455KHz frequency above the radio frequency is that oscillator always produces a frequency 455KHz above the selected frequency. In practice, capacitance of C_3 is designed to tune the oscillator to a frequency higher than radio frequency by 455KHz.

3. **IF amplifier stage-** The output of mixer is always 455KHz and is fed to fixed tuned IF amplifiers. These amplifiers are tuned to one frequency (ie 455KHz).
4. **Detector stage-** The output from the last IF amplifier stage is coupled to the input of the detector stage. Here the audio signal is extracted from the IF output. Usually diode detector circuit is used because of its low distortion and excellent audio fidelity.
5. **AF amplifier stage-** The audio signal output of detector stage is fed to a multistage audio amplifier. Here the signal is amplified until it is sufficiently strong to drive the speaker. The speaker converts the audio signal into sound waves corresponding to the original sound at the broadcasting station.

<u>Advantages of Superhetrodyne Circuit –</u>

1. High RF amplification
2. Improved selectivity-losses in the tuned circuits are lower at intermediate frequency. Therefore the quality factor Q of the tuned circuits is increased. This makes amplifier circuits to operate with maximum selectivity.
3. Lower cost.

CHAPTER 7

CATHODE RAY OSCILLOSCOPE

The cathode ray oscilloscope [CRO] is an electronic device, which is capable of giving a visual indication of a signal waveform. It is widely used for trouble shooting radio and television receivers as well as laboratory work involving research and design. In addition the oscilloscope can also be used for measuring voltage, frequency and phase shift.

Cathode Ray Tube

A cathode ray tube is the heart of the oscilloscope. It is a vacuum tube of special geometrical shape and converts an electrical signal into visual one. A cathode ray tube makes available plenty of electrons. These electrons are accelerated to high velocity and are brought to focus on a fluorescent screen. The electron beam produces a spot of light wherever it strikes. The electron beam is deflected on its journey in response to the electrical signal under study. The result is that electrical signal waveform is displayed visually.

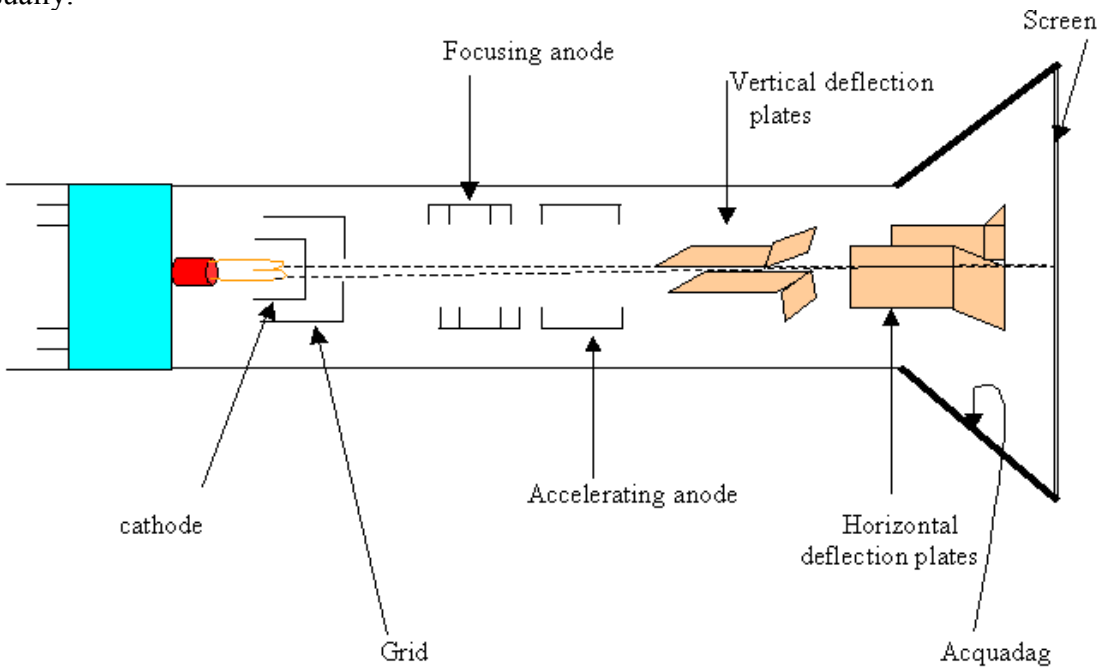

Figure Cathode Ray Tube

- **Electron Gun Assembly-** The arrangement of electrodes which produce a focused beam of electrons is called the electron gun. It essentially consists of an indirectly heated cathode, control grid, a focusing anode, and an accelerating anode. The control

grid is held at negative potential with respect to cathode whereas the two anodes are maintained at high potential with respect to cathode.

- The cathode consists of a nickel cylinder coated with oxide coating and provides plenty of electrons. The focusing anode focuses the electron beam into a sharp pin – point by controlling the positive potential on it. The positive potential (about 10,000 V) on the accelerating anode is much higher than on the focusing anode. Therefore this anode accelerates the narrow beam to a high velocity.

- **Deflection plate assembly-**

    1. Vertical deflection plates
    2. Horizontal deflection plates

The vertical deflection plates are mounted horizontally in the tube. By applying proper potential to these plates, the electron beam can be made to move up and down vertically on the fluorescent screen. An appropriate potential on horizontal plates can cause the electron beam to move right and left horizontally on the screen.

- **Screen-**The screen is the inside face of the tube and is coated with some fluorescent material such as Zinc Orthosilicate, Zinc oxide etc. When high velocity electron beam strikes the screen, a spot of light is produced at the point of impact.

Action of CRT

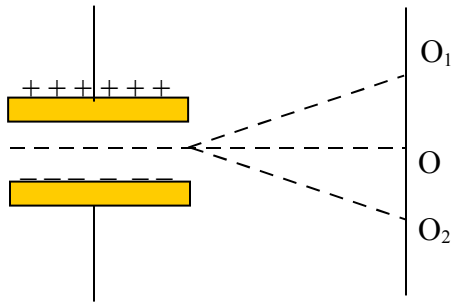

- When the cathode is heated, it emits plenty of electrons. The control grid influences the amount of current flow. As the electron beam leaves the control grid, it comes under the influence of focusing and accelerating anode. As the two anodes are maintained at high potential, therefore they produce a field which acts as an electrostatic lens to converge the electron beam at a point on the screen.

- As the electron beam leaves the accelerating anode, it comes under the influence of vertical and horizontal deflection plates. If no voltage is applied to the deflection plates, the electron will produce spot of light at the center (point O) of the screen. If the voltage is applied to vertical plates only, the electron beam and hence the spot of light will be deflected upwards (point O_1). The spot of light will be deflected downwards (O_2) of the portential on the plate is reversed. Similarly the spot of light can be moved horizontally by applying voltage across the horizontal plates.

Signal Pattern on Screen

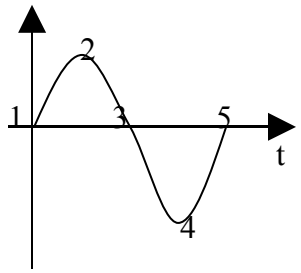

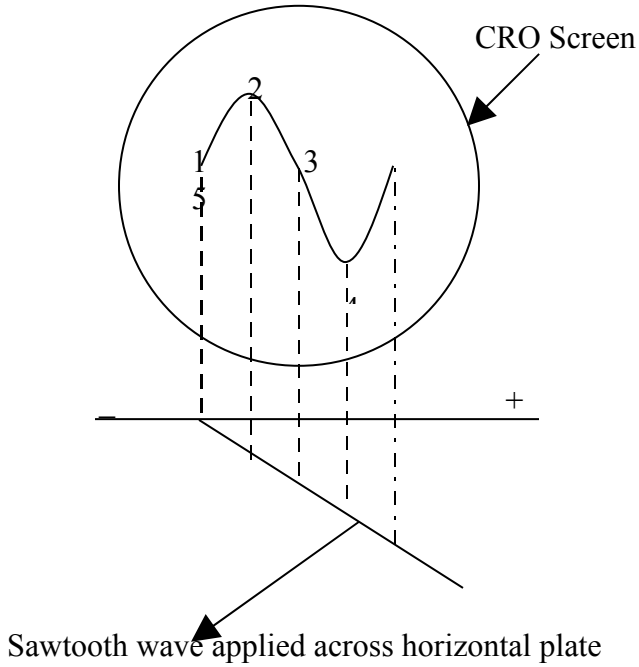

- If the signal voltage is applied to the vertical plates and saw tooth wave to the horizontal plates, we get the exact pattern of the signal as shown in figure.

- When the signal is at instant 1, its amplitude is zero. But at this instant, maximum voltage is applied to the horizontal plates. The result is that the beam is at the extreme left on the screen as shown. When the signal is at instant 2, its amplitude is maximum. However the –ve voltage on he horizontal plate is decreased. Therefore the beam is deflected upwards by the signal and towards the right by the saw tooth wave. The result is that the beam now strikes the screen at point 2. On similar reasoning, the beam strikes the screen at points 3,4 and 5. Therefore exact signal pattern appears on the screen.

Various controls on CRO

In order to facilitate the proper functioning of CRO, various controls are provided on the front panel of the CRO.

1. **Intensity Control-**The knob of intensity control regulates the bias on the control grid and affects the electron beam intensity.If the negative bias on the grid is increased, the intensity of electron beam is decreased, thus reducing the brightness of the spot.
2. **Focus Contrl-** It regulates the positive potential on the focusing anode. If the positive potential on this anode is increased, the electron beam becomes quite narrow and the spot on the screen is a pin-point.
3. **Vertical position control-** The knob of vertical position control regulates the amplitude of d.c. potential which is applied to the vertical deflection plates in addition to the signal. By adjusting this control, the image can be moved up or down as required.

Applications of CRO

1. Examination of waveforms
2. Voltage measurements
3. Frequency measurements