ELNG 114: ELECTRICAL MACHINES

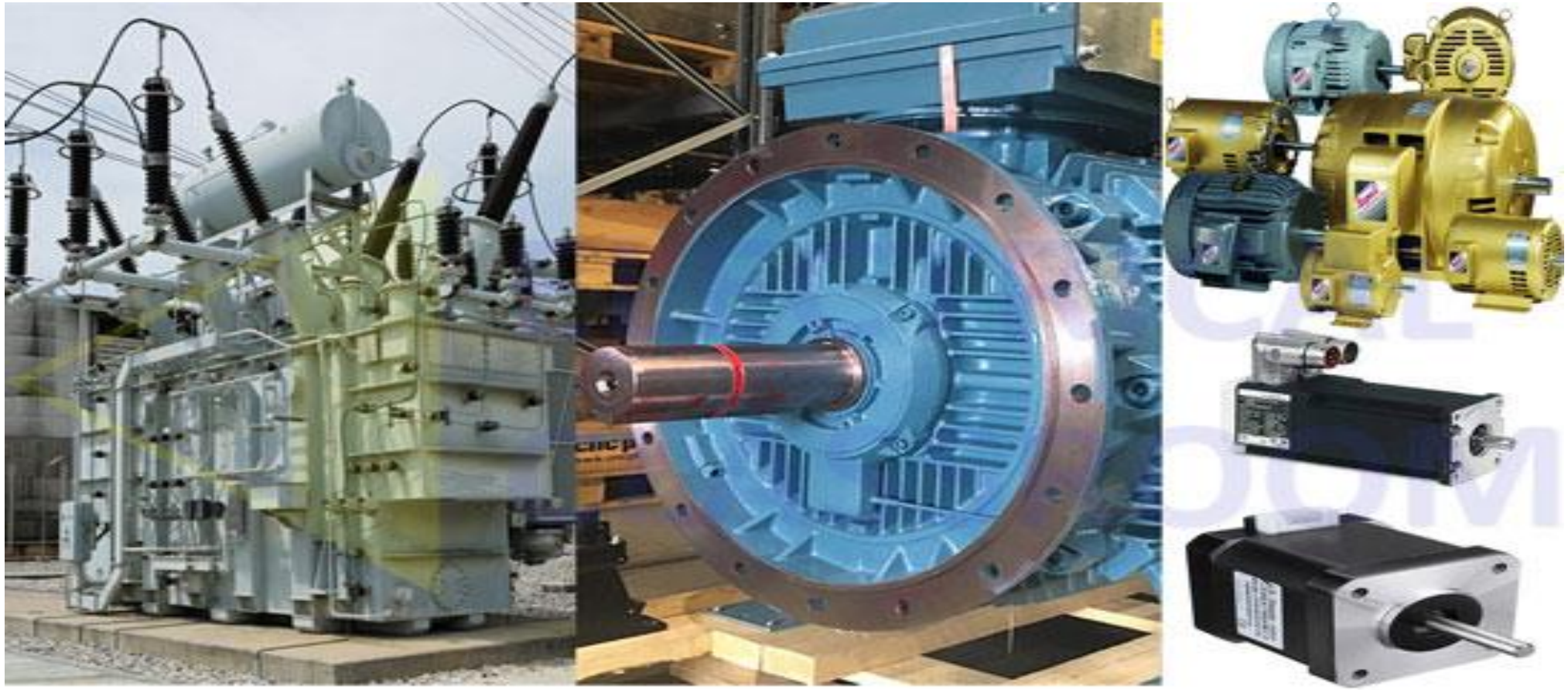

ELECTRIC MACHINES

TRANSFORMERS

TRANSFORMER

- A transformer is a static piece of equipment used either for raising or lowering the voltage of an a.c. supply with a corresponding decrease or increase in current
- It essentially consists of two windings, the primary and secondary, wound on a common laminated magnetic core
- The winding connected to the a.c. source is called primary winding (or primary) and the one connected to load is called secondary winding (or secondary).

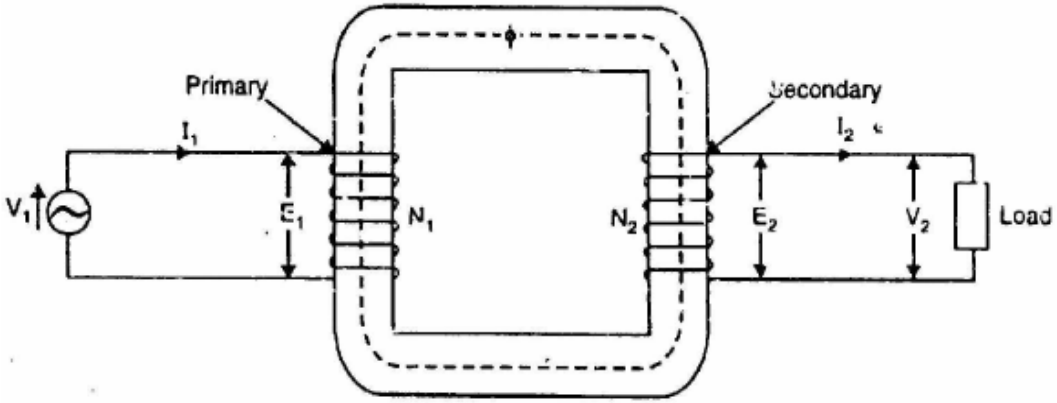

TRANSFORMER

- The alternating voltage V_1 whose magnitude is to be changed is applied to the primary
- Depending upon the number of turns of the primary (N_1) and secondary (N_2), an alternating e.m.f. E_2 is induced in the secondary
- This induced e.m.f. E_2 in the secondary causes a secondary current I_2.
- A terminal voltage V_2 will appear across the load. If $V_2 > V_1$, it is called a step up-transformer.
- On the other hand, if $V_2 < V_1$, it is called a step-down transformer.

TRANSFORMER – WORKING PRINCIPLE

- It operates on the Faraday's Law of Electromagnetic Induction
- When an alternating voltage V_1, applied to coil 1, an alternating current, I_1 flows in the coil and this current produces an alternating flux Ø in the iron core
- A portion of the total flux links the second coil
- The alternating flux induces an emf E_2 in the second coil
- If a load should be connected to the coil, this emf would drive a current I_2 through it

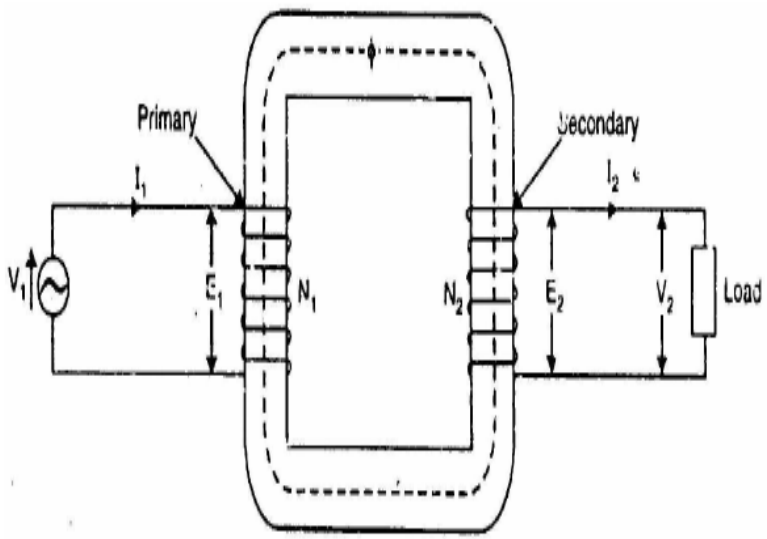

POLARITY AND TERMINAL MARKINGS OF A TRANSFORMER

- Voltage E_1 is induced in coil 1 and voltage E_2 in coil 2. These voltages are in phase
- Suppose at any given instant when the primary terminal 1 is positive with respect to primary terminal 2, the secondary terminal 3 is also positive with respect to secondary terminal 4
- Then terminals 1 and 3 are said to have the same polarity

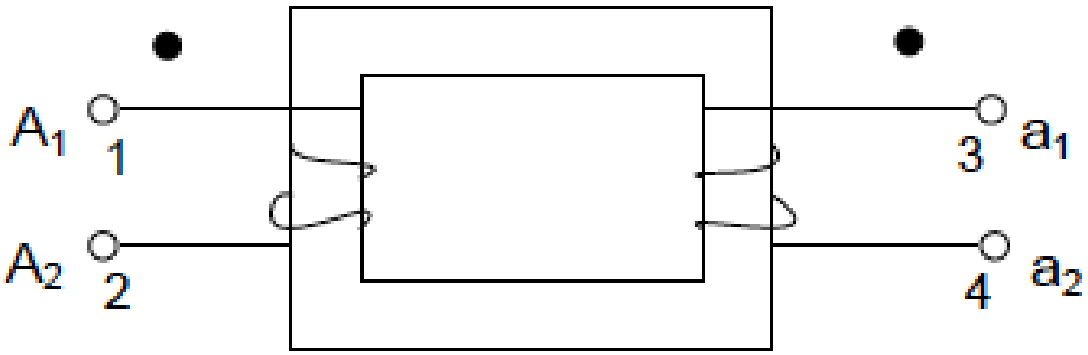

(a) Magnetic Circuit

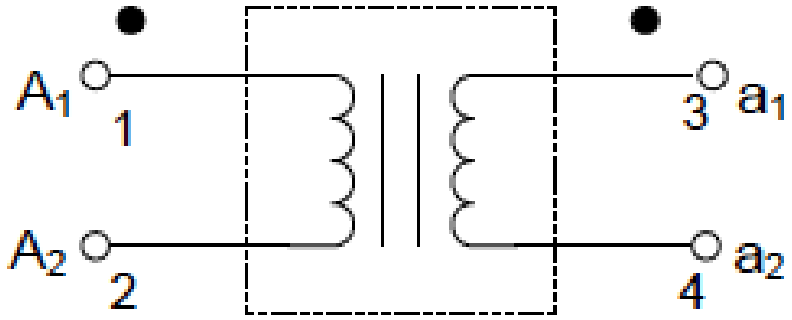

(b) Electric Circuit

TRANSFORMER

- The transformer action is based on the laws of electromagnetic induction
- There is no electrical connection between the primary and secondary.
- The a.c. power is transferred from primary to secondary through magnetic flux.
- There is no change in frequency i.e., output power has the same frequency as the input power
- The losses that occur in a transformer are:

  (a) core losses—eddy current and hysteresis losses

  (b) copper losses—in the resistance of the windings

IDEAL TRANSFORMER

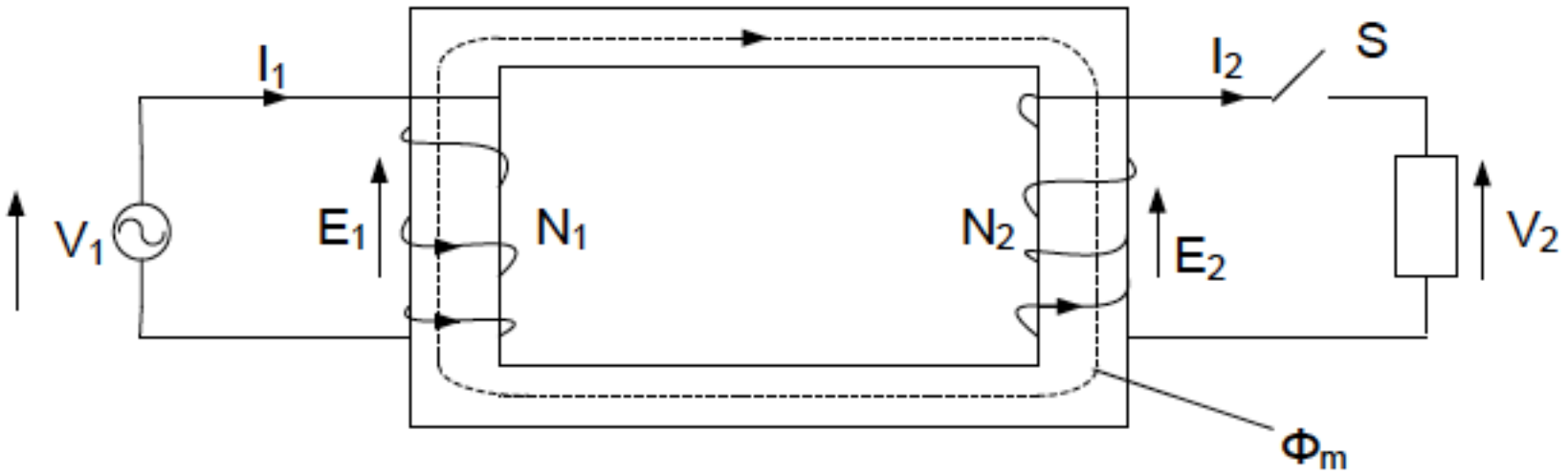

($I_1 = 0$ on no load)

IDEAL TRATNSFORMER

- An ideal transformer is one that has

  (i) no winding resistance

  (ii) no leakage flux i.e., the same flux links both the windings

  (iii) no iron losses (i.e., eddy current and hysteresis losses) in the core

- Although ideal transformer cannot be physically realized, yet its study provides a very powerful tool in the analysis of a practical transformer. In fact, practical transformers have properties that approach very close to an ideal

EMF EQUATION OF A TRANSFORMER

- Sinusoidal flux produced by the primary can be represented by

$$\phi = \phi_m \sin\omega t$$

- Instantaneous e.m.f. induced in the primary is

$$e_1 = -N_1 \frac{d\phi}{dt} = -N_1 \frac{d}{dt}(\phi_m \sin\omega t)$$
$$= -\omega N_1 \phi_m \cos\omega t = -2\pi f N_1 \phi_m \cos\omega t$$
$$= 2\pi f N_1 \phi_m \sin(\omega t - 90°)$$

- The maximum value of e.m.f. induced in the primary is

$$E_{m1} = 2\pi f N_1 \phi_m$$

EMF EQUATION OF A TRANSFORMER

The r.m.s. value E^ of the primary e.m.f. is

$$E_1 = \frac{E_{m1}}{\sqrt{2}} = \frac{2\pi f N_1 \phi_m}{\sqrt{2}}$$

or $$E_1 = 4.44 f N_1 \phi_m$$

Similarly $$E_2 = 4.44 f N_2 \phi_m$$

In an ideal transformer, $E_1 = V_1$ and $E_2 = V_2$.

VOLTAGE RATIO

- From the EMF equations of the primary and secondary sides we can make the following deductions

$$E_1 = 4.44\ f\ N_1\ \phi_m$$

$$E_2 = 4.44\ f\ N_2\ \phi_m$$

$$\frac{E_1}{E_2} = \frac{N_1}{N_2}$$

- The ratio *a = N1/N2* is called the turns ratio
- A step-up transformer has *a < 1* and a step-down transformer has *a > 1.*
- In an ideal transformer, the applied voltage *V1* and the induced voltage *E1* must be identical.

$$V_1 = E_1 \qquad V_1 = 4.44 f N_1 \Phi_{max}$$

CURRENT RATIO

- On no load I_1 = 0. If a load is connected across the secondary terminals (i.e. switch S is closed) current I_2 flows through the load
- For an ideal transformer, the flux in the core is fixed and there are no losses, therefore the mmf on both sides are equal the the following relation can be obtained

$$N_1 I_1 = N_2 I_2$$

$$I_1 = I_2 / a$$

PHASOR DIAGRAM OF AN IDEAL TRANSFORMER

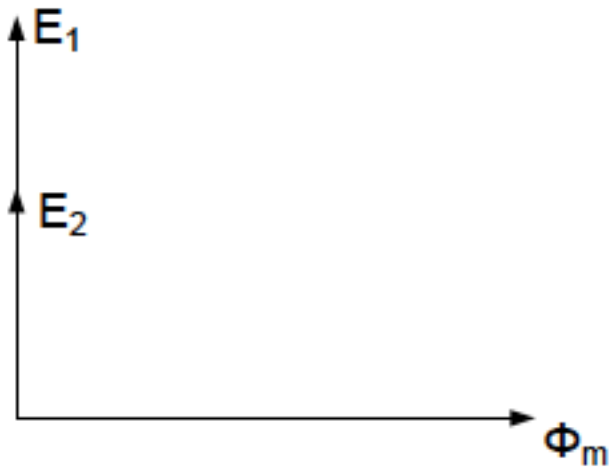

(a) No load

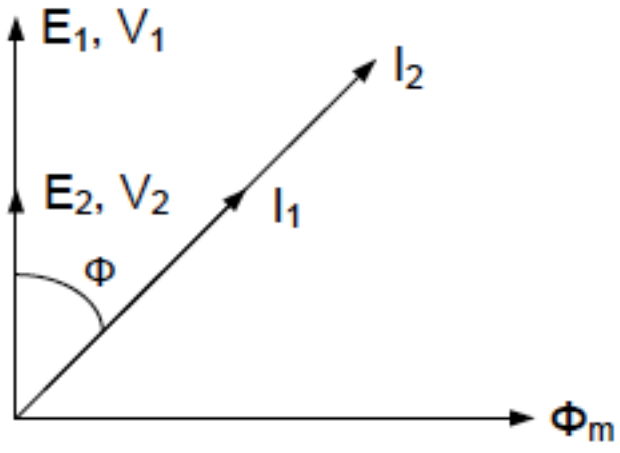

(b) Load is resistive inductive

EXERCISES

- The number of turns on the primary and secondary windings of a single phase transformer are 350 and 35 respectively. If the primary is connected to a 2.2kV, 50Hz supply, determine the secondary voltage on no – load.

- A 3,300/230 – V 50Hz, single phase transformer has 660 turns on the primary. Determine
  - the number of turns on the secondary
  - the maximum value of flux in the core
  - the approximate value of primary and secondary full load currents

EXERCISES

- A 100 – kVA, 3300/400 – V, 50Hz, 1 phase transformer has 110 turns on the secondary. Calculate the approximate values of the primary and secondary full – load currents, the maximum value of flux in the core and the number of primary turns.

- A double – wound, 1 – phase transformer is required to step down from 1900V to 240V, 50Hz. It is to have 1.5V per turn. Calculate the required number of turns on the primary and secondary windings

IMPEDANCE RATIO

$$Z_e = V_1/I_1 = E_1/I_1 = aE_2/(I_2/a) = a^2\, E_2/I_2 = a^2 Z$$
$$\therefore Z_e = a^2 Z$$

$$I_2 Z = E_2 = E_1/a = V_1/a$$

$$\frac{V_1}{a} = I_2 Z$$

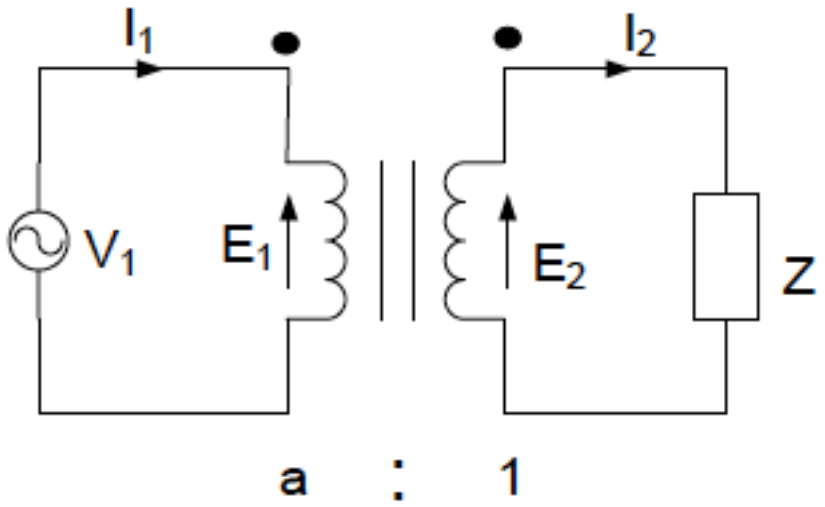

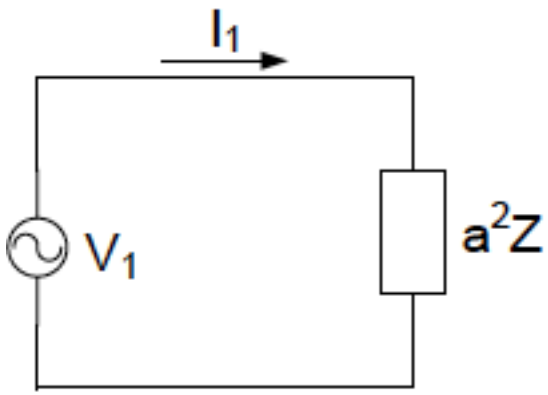

Circuit referred to the primary side

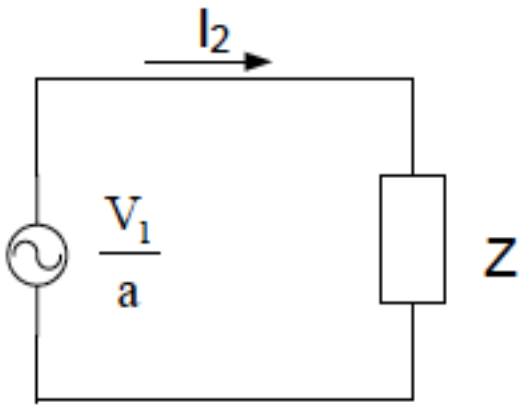

circuit referred to the secondary side

IMPEDANCE RATIO

Calculate the voltage V and current I in the circuit of Fig. 7, knowing that the ideal transformer has a primary to secondary turns of 1:100 (i.e. a = 1/100).

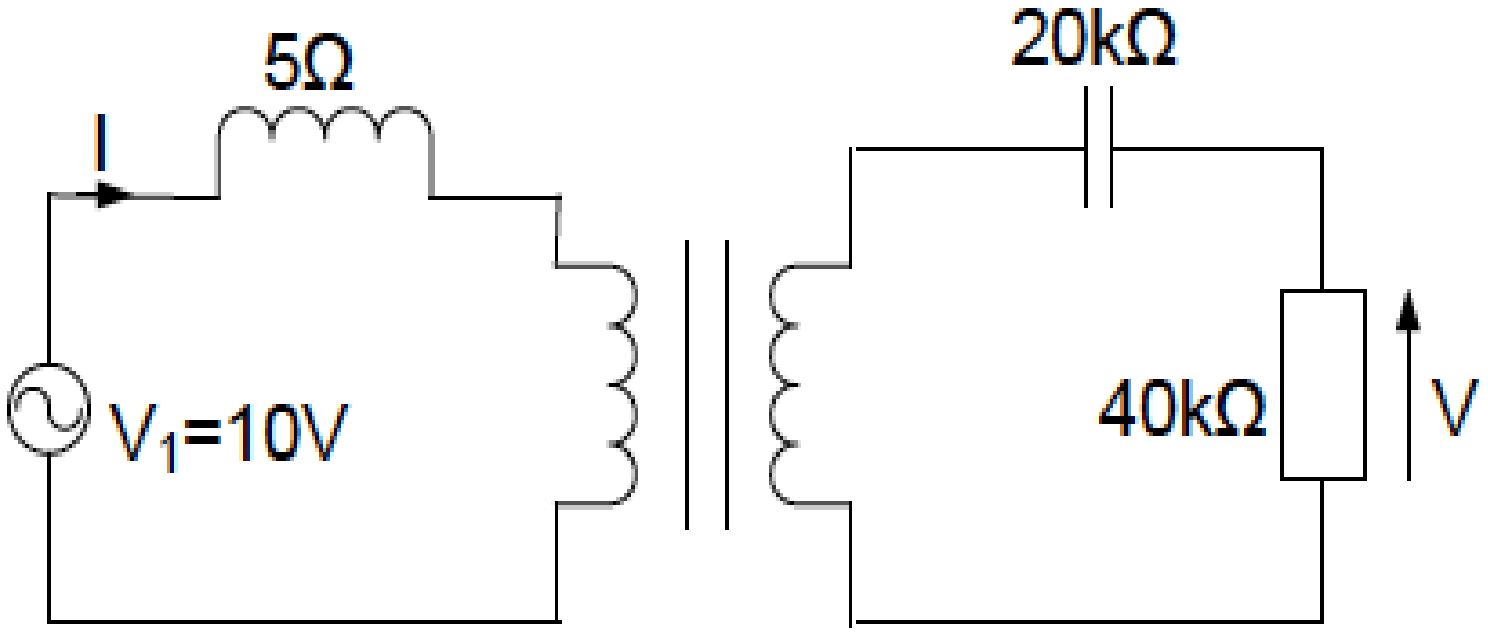

SOLUTION

We shall shift all impedances to the primary side

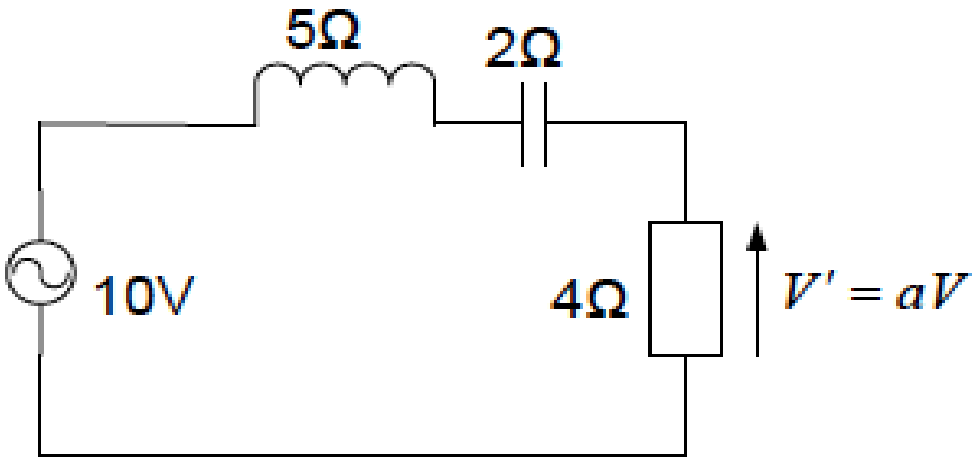

$$Z_e = \sqrt{R^2 + (X_L - X_C)^2} = \sqrt{4^2 + 3^2} = 5\Omega$$

$$I = \frac{V_1}{Z_e} = \frac{10}{5} = 2A$$

$$V' = IR = 2 \times 4 = 8V. \quad \textit{The actual voltage } V = \frac{V'}{a} = 100 \times 8 = 800V$$

PRACTICAL SINGLE PHASE TRANSFORMER

- The windings of a practical transformer have both resistance and leakage inductance
- The core is also imperfect: it has a core loss and finite permeability
- The core loss has two components: hysteresis loss and eddy current loss

PHASOR DIAGRAM ON NO LOAD

- To furnish the power loss in the core (core loss), a small current must be drawn from the source
- This current I_p must be in phase with induced voltage E_1
- Also to create the mutual flux Φ_m, a magnetizing current I_m in phase with Φ_m and lagging 90° behind E_1 must be drawn to produce the required *mmf*.

PHASOR DIAGRAM ON NO LOAD

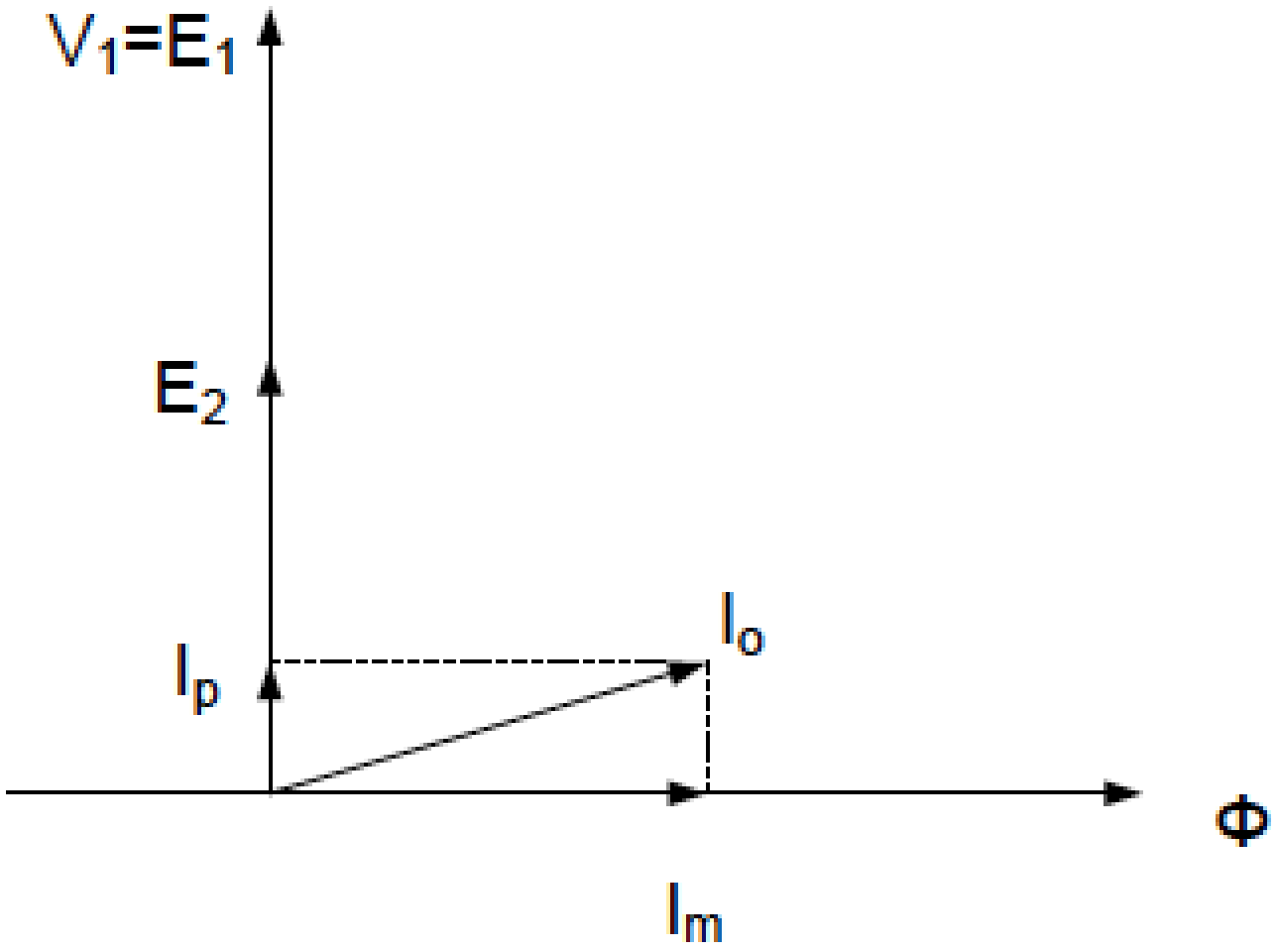

PHASOR DIAGRAM ON NO LOAD

We note that

(i) the no-load current I_o taken by the primary is the phasor sum of core loss current, I_p and magnetizing current, I_m

(ii) the difference between the value of the applied voltage V_1 and that of the induced emf E_1 is only about 0.05% when the transformer is on no load so the two can be considered to be equal

(iii) I_p is very small compared with I_m. Therefore the no-load power factor is very low.

PHASOR DIAGRAM ON NO LOAD

where

no load current is:

$$I_o = \sqrt{I_p^2 + I_m^2}$$

magnetizing current:

$$I_m = I_o sin\emptyset_o$$

core loss current

$$I_p = I_o cos\emptyset_o$$

Power factor

$$\cos\emptyset_o = \frac{I_p}{I_o}$$

Core losses, $P_{loss} = V_1 I_0 cos\emptyset_o$

EXAMPLE

A transformer takes a current of 0.8A when its primary is connected to a 240 volt, 50 Hz supply, the secondary being on open circuit. If the power absorbed is 72 watts, determine

i. the iron loss current

ii. the power factor on no – load

iii. The magnetizing current

EXAMPLE

A 2400 V/400 V single – phase transformer takes a no – load current of 0.5A and the core loss is 400 W. Determine the values of the magnetizing and core loss components of the no – load current. Draw the no – load phasor diagram for the transformer

MUTUAL AND LEAKAGE FLUXES IN A TRANSFORMER

- The actual flux linking a coil can be considered to have two components:
  - the mutual flux Φ_m linking both coils
  - the leakage flux Φ_l
- The reluctance of the paths of the leakage flux is almost entirely due to the long air paths and is therefore practically constant

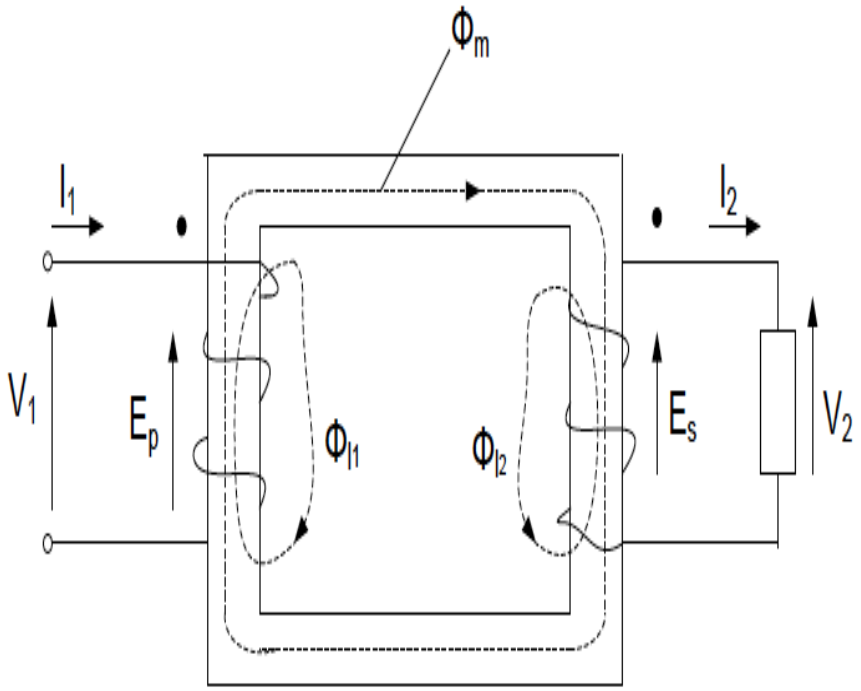

MUTUAL AND LEAKAGE FLUXES IN A TRANSFORMER

The secondary induced voltage E_s is composed of two parts:

(a) a voltage E_{l2} induced by leakage flux Φ_{l2} given by $E_{l2} = 4.44fN_2\Phi_{l2,max}$

(b) a voltage E_2 induced by mutual flux Φm given by $E_2 = 4.44fN_2\Phi_{max}$

Similarly the primary induced voltage is composed of

$E_{1l} = 4.44fN_1\Phi_{l1,max}$

$E_1 = 4.44fN_1\Phi_{max}$

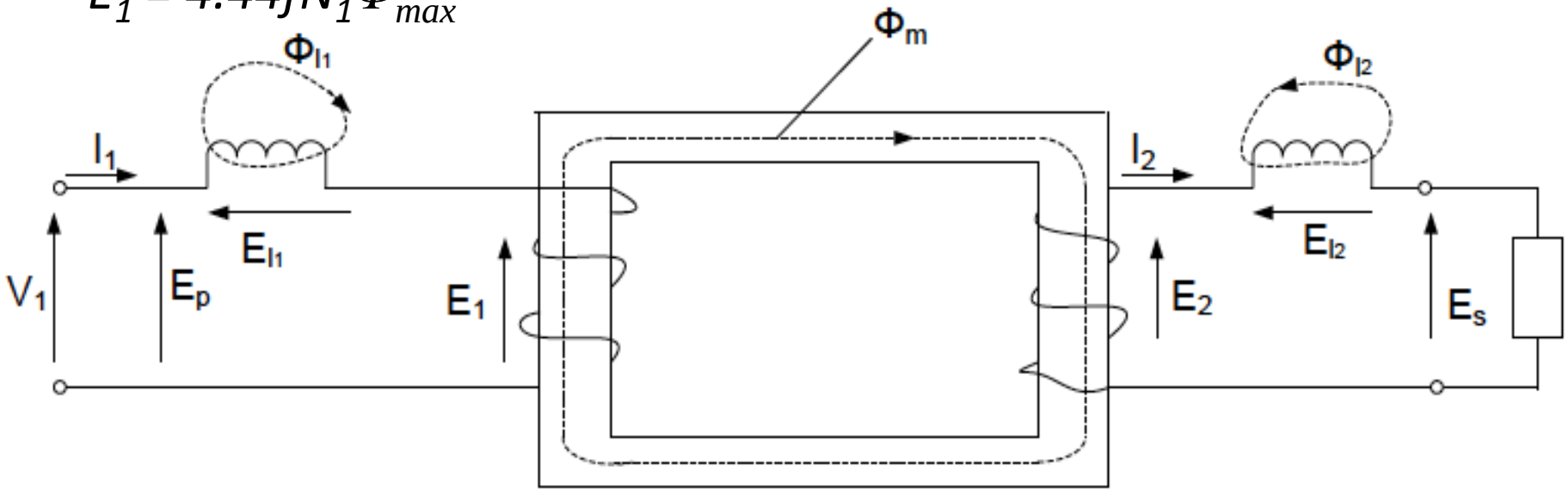

EQUIVALENT CIRCUIT OF A PRACTICAL TRANSFORMER

- The practical transformer is assumed to be an ideal transformer
- The imperfections are then allowed by means of additional circuits or impedances
- The impedances are inserted between the supply and the primary windings and between the secondary winding and the load

EQUIVALENT CIRCUIT OF A PRACTICAL TRANSFORMER

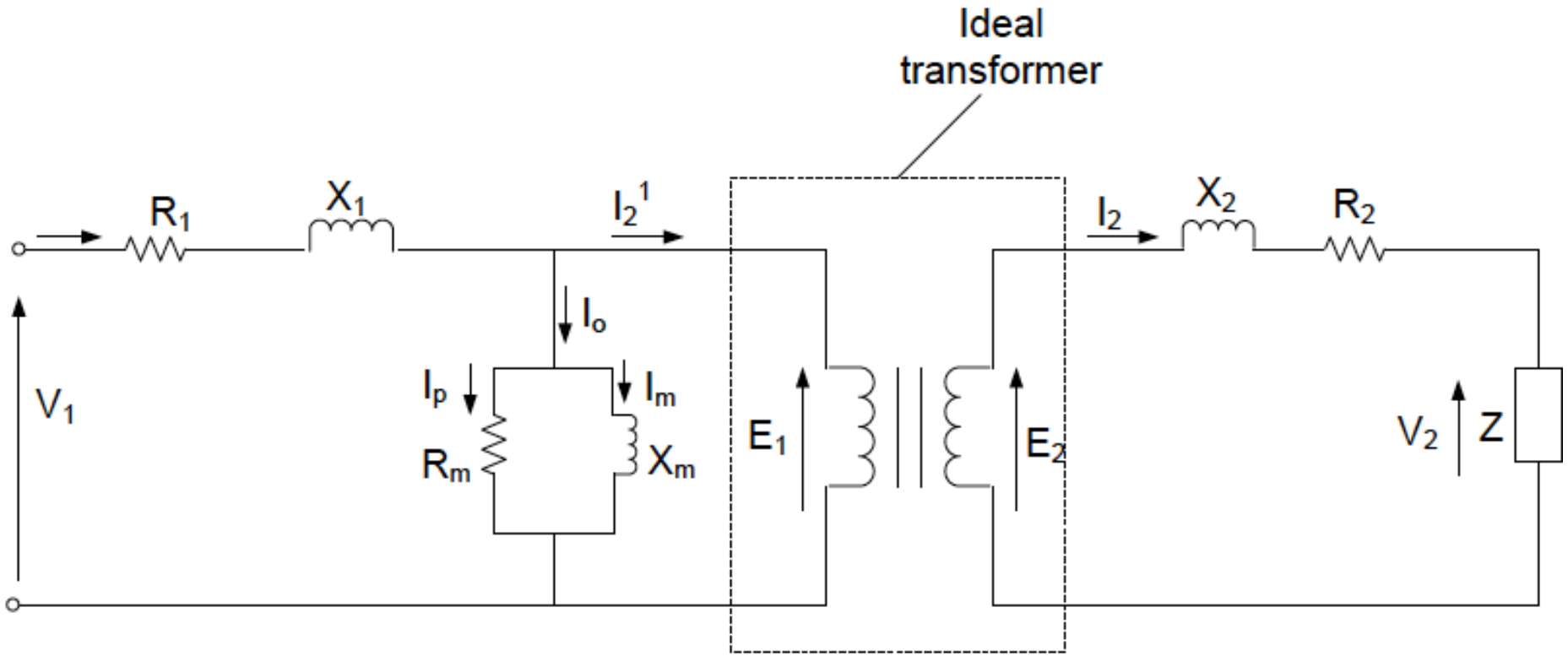

Ideal transformer equations still apply: $I_2' N_1 = N_2 I_2$ and $E_1 / E_2 = N_1 / N_2$

EQUIVALENT CIRCUIT OF A PRACTICAL TRANSFORMER

- R_1 and R_2 are resistances of the primary and secondary windings
- X_1 and X_2 are the leakage reactances
- The reactance X_m is such that it takes a reactive current I_m (i.e. the magnetizing current) of the actual transformer.
- The core loss is accounted for by the resistor R_m which takes the component I_p of the primary current.

EQUIVALENT CIRCUIT REFERRED TO THE PRIMARY SIDE

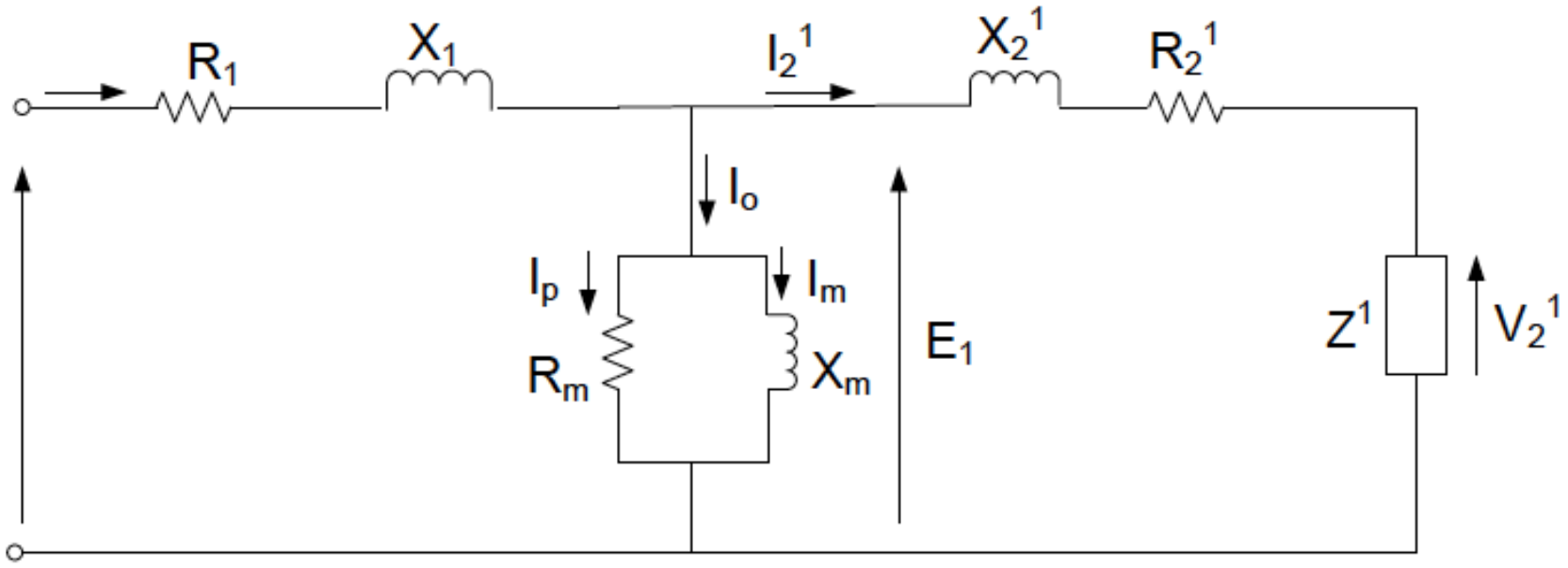

Let $a = N_1/N_2$

Then

$$X_2' = (N_1/N_2)^2 X_2 = a^2 X_2,\ R_2' = (N_1/N_2)^2 R_2 = a^2 R_2,\ Z' = (N_1/N_2)^2 Z = a^2 Z$$

$$V_2' = (N_1/N_2) V_2 = a V_2,\ I_2' = I_2/a$$

It is worth noting that for a practical transformer, $R_2' \cong R_1$ *and* $X_2' \cong X_1$

EQUIVALENT CIRCUIT REFERRED TO THE SECONDARY SIDE

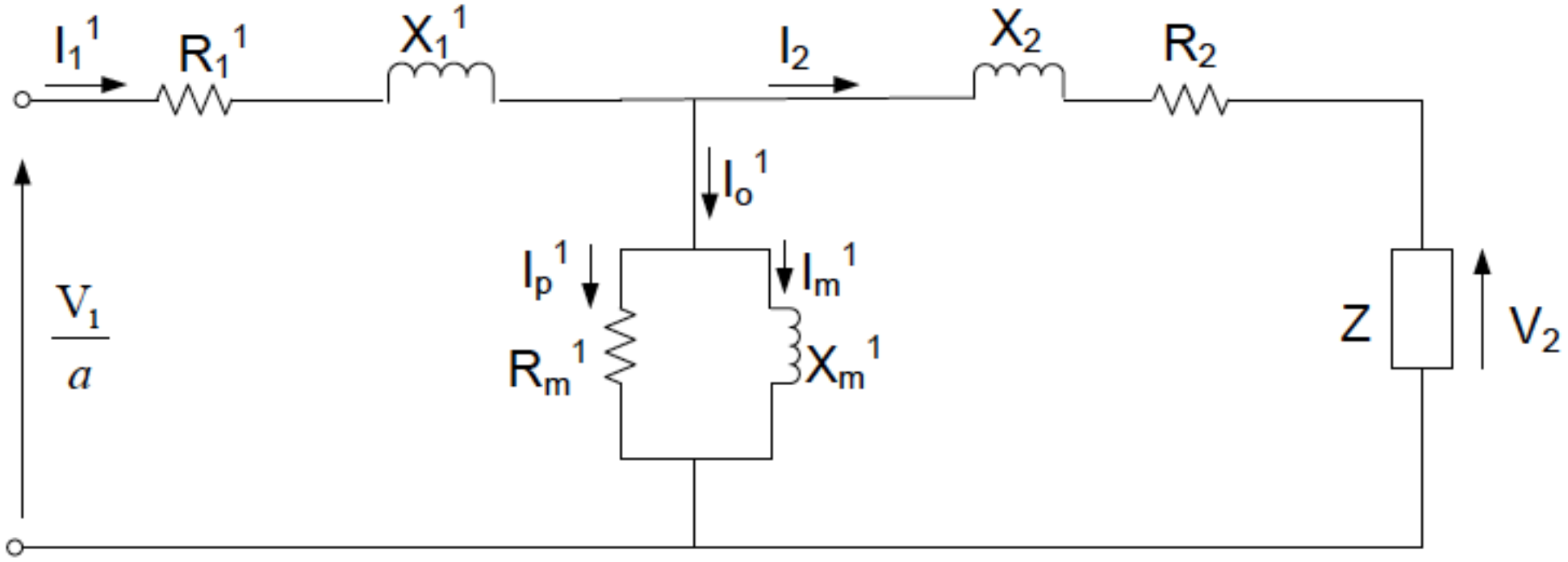

$$R_1' = (N_2/N_1)^2 R_1 = R_1/a^2$$

$$N_2 I_p' = N_1 I_p \quad or \; I_p' = aI_p$$

APPROXIMATE EQUIVALENT CIRCUITS

- The exact equivalent circuit of the transformer is too exact for most practical applications
- Consequently, we can simplify it to make calculations easier

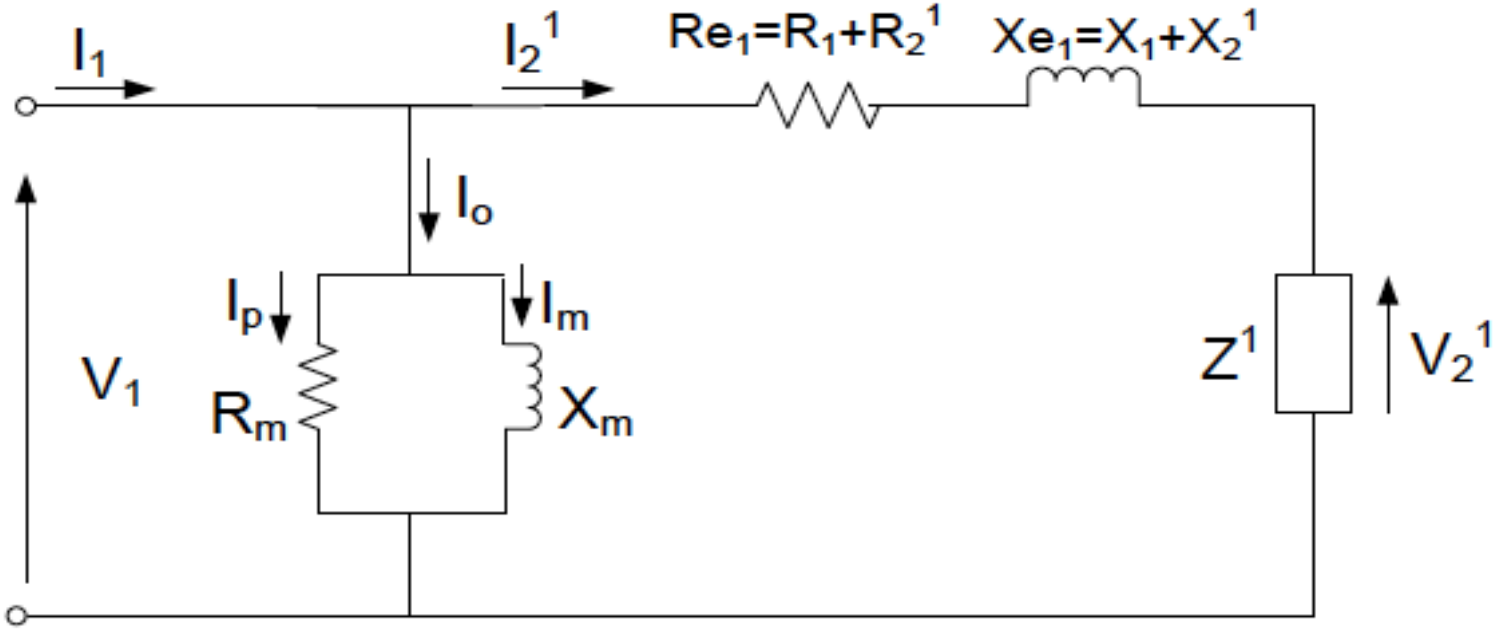

(a) Voltage drop in the primary leakage impedance due to exciting or no load current I_o is neglected.

Fig. 14.a

APPROXIMATE EQUIVALENT CIRCUITS

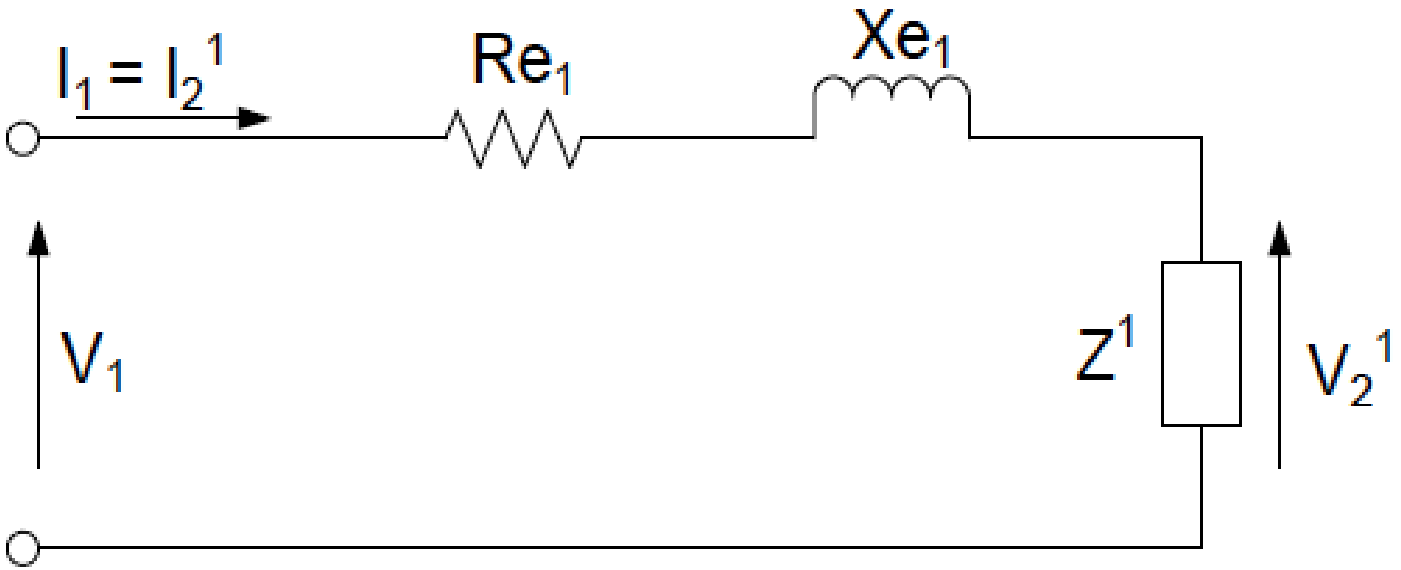

(b) Exciting current is neglected entirely. Note that primary rated or full load current is at least 20 times larger than I_o. This circuit may be used when $I_1 = 1.15x$*full load current*

Fig. 14.b

APPROXIMATE EQUIVALENT CIRCUITS

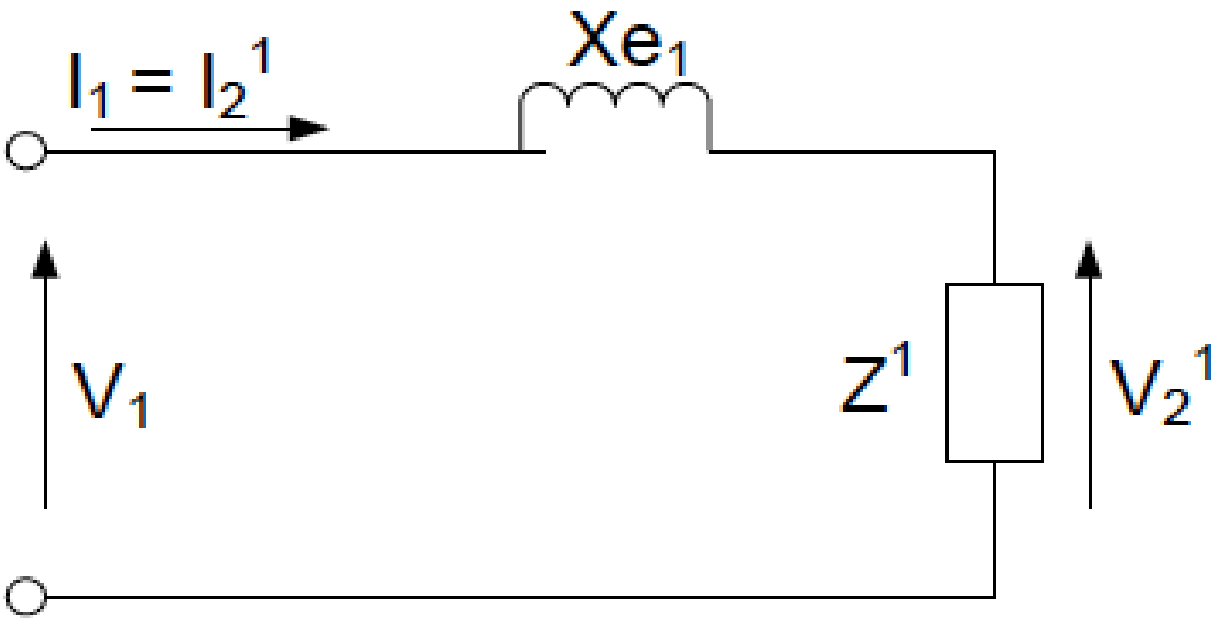

(c) For transformers above 500 kVA, X_e is at least 5 times greater than R_e. This circuit can be used to calculate voltage regulation of such transformers.

Fig. 14.c

Example

A transformer is rated 10 kVA, 2400 / 240 V, 60 Hz. The parameters for the approximate equivalent circuit of Fig. 14.a are *Rm = 80 kΩ*, *Xm = 35 kΩ*, *Re1 = 8.4 Ω* and *Xe1 = 13.7 Ω*. Determine the voltage to be applied to the primary to obtain the rated current in the secondary when the secondary terminal voltage is 240 V. What is the input power factor? The load power factor is 0.8 lagging.

Solution:

$$I_2' = I_{2fl}/a = I_{1fl} = 10000/2400 = 4.17\,A$$

The power factor angle $\phi = \cos^{-1}(0.8) = 36.9°$

If we choose the load current $\boldsymbol{I_2}$ as the reference phasor, then $\boldsymbol{V_2} = 240\angle 36.9°$

$$\boldsymbol{V_2}' = a\boldsymbol{V_2} = 2400\angle 36.9° = 1920 + j1440 \text{ volts}$$

The voltage across the equivalent leakage impedance is

$$\boldsymbol{Z_{e1}I_2}' = (8.4 + j13.7)(4.17 + j0) = 35 + j57 \text{ volts}$$

The primary voltage required

$$\boldsymbol{V_1} = \boldsymbol{V_2}' + \boldsymbol{Z_{e1}I_2}' = (1920 + j1440) + (35 + j57) = 1955 + j1497 = 2462\angle 37.4°\ volts$$

$$\boldsymbol{I_p} = \frac{\boldsymbol{V_1}}{R_m} = \frac{1955 + j1497}{80\,k\Omega} = (24.4375 + j18.7125)\,mA$$

$$\boldsymbol{I_m} = \frac{\boldsymbol{V_1}}{jX_m} = \frac{1955 + j1497}{j35\,k\Omega} = (42.7714 - j55.8571)\,mA$$

$$\boldsymbol{I_1} = \boldsymbol{I_2}' + \boldsymbol{I_p} + \boldsymbol{I_m} = (4.17 + j0) + (0.0244 + j0.0187) + (0.0427 - j0.0558)$$

$$= 4.2371 - j0.0371 = 4.237\angle -0.50°\ A$$

Phase angle between $\mathbf{V_1}$ and $\mathbf{I_1} = 37.4 - (-0.50) = 37.9°$

Input power factor $= \cos(37.9°) = 0.79$ lagging

Example

A 1-ph transformer operates from a 230-V supply. It has an equivalent resistance of 0.1Ω and an equivalent leakage reactance of 0.5 Ω referred to the primary. The secondary is connected to a coil having a resistance of 200 Ω and a reactance of 100 Ω. Calculate the secondary terminal voltage. The secondary winding has four times as many turns as the primary