Machine Learning Implementation on BLDCM Commutation

Seng-Chi Chen[a], Dwi Sudarno Putra[b]

Department of Electrical Engineering, Southern Taiwan University of Science and Technology
No.1 Nan-Tai St., Yongkang District
Tainan City,71005, Taiwan
[a]amtfcsg123@mail.stust.edu.tw, [b]dwisudarnoputra@ft.unp.ac.id

Abstract

One way to do the commutation process at BLDCM is the six-step method. And hardware implementation for this method can be done in various ways. This paper will try to run a BLDCM commutation process using machine learning. Machine learning is an artificial intelligence method that can respond based on the learning process that was carried out previously through existing data sets. In this study, the training process is done offline. Then the "weight" obtained from the training is used in the Machine Learning structure which is implemented on the F28069M microcontroller. From the hardware implementation, it is proven that Machine Learning can be used in the BLDC motor commutation process.

Key words: machine learning, BLDC commutation, six-step control and hardware implementation

Introduction

DC motor is a motor with a direct current supply. With a permanent magnet as a stator and a coil as a rotor, DC motor needs a conductor that makes the coil always be electrified to creates a magnetic field and the rotation is established. It called a brush. The use of a brush can cause mechanical friction and requires maintenance to make sure the motor can be used properly. Because of this, researchers then developed a brushless motor which became known as the Brushless DC motor. BLDC is low maintaining and is quieter [1]. The BLDCM stator rotation mechanism is controlled by "changing regularly" the magnetic field conditions caused by the stator coil so that the rotor can move. However, it also requires a more complex control process compared to DC brushed motors.

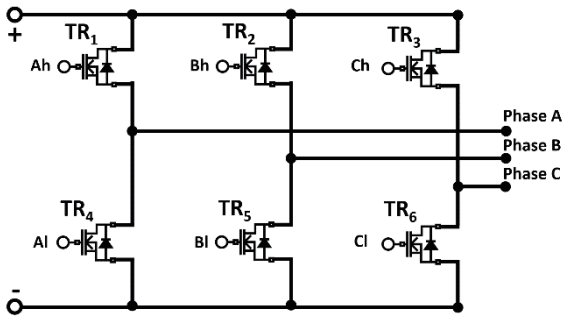

Fig. 1 Three phases inverter

To supply current to the coil, the BLDC motor also needs a circuit that can convert DC voltage to the 3 phase voltage. To realize this, a 3 phase inverter circuit is used (Figure 1) [2]. The supply of current to each of the coils through the inverter must be arranged in such a way as to have a sequence that will ultimately rotate the rotor so that the correct timing is needed. One mechanism that is often used is the six-step commutation (Figure 2). In one cycle, six-step control will produce 6 different conditions in 3 phase voltage [3]. And it can be done based on the information from sensors or without sensors (sensorless), and on the hardware implementation we can use several methods [4].

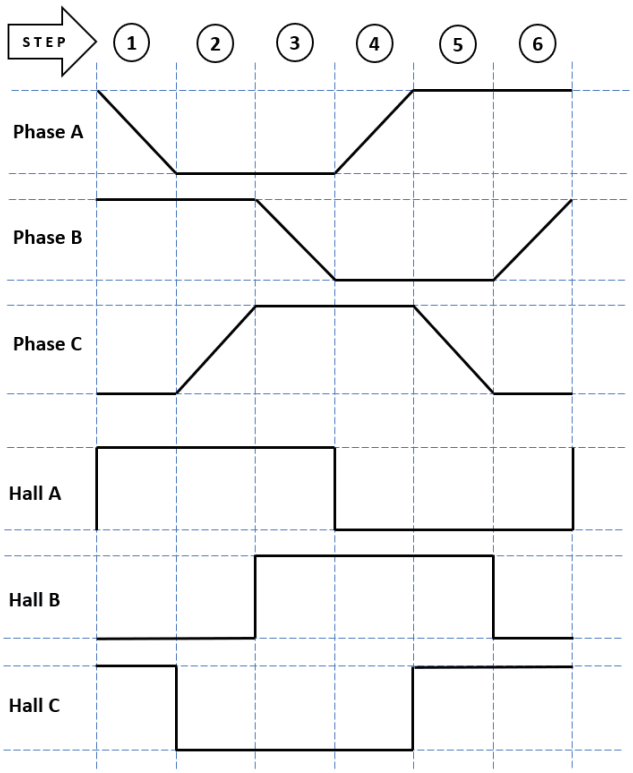

Fig. 2 Six-Step commutation

Some motor control studies with machine learning have focused on modeling the control system, controller equivalence and rotor position estimation [5]. This paper will discuss a new way of implementing six-step commutation using Machine Learning. Machine Learning is an artificial intelligence method that can respond to an input into a specific output based on the learning process that has been passed by using a corresponding dataset [6]. With the existence of Machine Learning, the calculation output obtained will directly be output without matching again to the switching table memory. To ensure the embedded Machine Learning process in the hardware runs well, this study uses the Sensored Method. Machine Learning is used based on Feedforward Neural network with offline training using Back-Propagation [7], [8].

This paper is organized as follows. In the section II, the

ISBN: 978-1-7281-6712-9
Authorized licensed use limited to: Universidad Nacional Autonoma De Mexico (UNAM). Downloaded on April 11,2026 at 16:35:36 UTC from IEEE Xplore. Restrictions apply.

proposed machine learning and the data training is described. Machine learning realization is described in section III. Finally the experimental result and discussion is described in the section IV.

Proposed Method

Machine Learning that was developed for the six-step commutation process uses a sensored system. So there will be 3 inputs (from the hall sensor) and 6 output conditions (for 6 MOSFETs on the three phase inverter). The training data used is the relationship between the hall sensor condition and the MOSFET switching sequence as shown in table 1. In the hardware implementation, Machine Learning will use a feedforward neural network. Which the weights are obtained from the offline training process of the backpropagation neural network (Figure 3). Backpropagation Neural Network is known to have good recognition accuracy because of the error correction process back in each learning process.

First of all, the weights are generated randomly at the beginning of the learning process. From the Figure 4, the input value will be received by the input layer's neuron (x_i). After giving the weigh (v_{ij}) to it, each Neuron in the input layer will distribute the input value to each neuron in the hidden layer. In each of these hidden layer neurons, there will be a summation of all inputs (z_in_j) .

$$z_in_j = \sum_{i=1}^{n} x_i v_{ij} \quad (1)$$

With the summation value, each hidden layer neuron will calculate it's neuron activation value and use it as the output of the neuron (z_j).

$$z_j = f(z_in_j) \quad (2)$$

This neuron output will be weighting by appropriate weighting (w_{jk}) and distributed to the next layer, to each neuron in the output layer. In each of these output layer neurons, there will be a summation of all inputs from each hidden layer neuron (y_in_k).

$$y_in_k = \sum_{j=1}^{p} z_j w_{jk} \quad (3)$$

Each of output layer neuron will calculate it's neuron activation value and use it as the output of the neuron (y_k).

$$y_k = f(y_in_k) \quad (4)$$

In this paper, the activation function of neurons in both the hidden layer and the output layer uses the Sigmoid Binary function, which has a value range of 0 to 1

$$f(x) = \frac{1}{(1+e^{-x})} \quad (5)$$

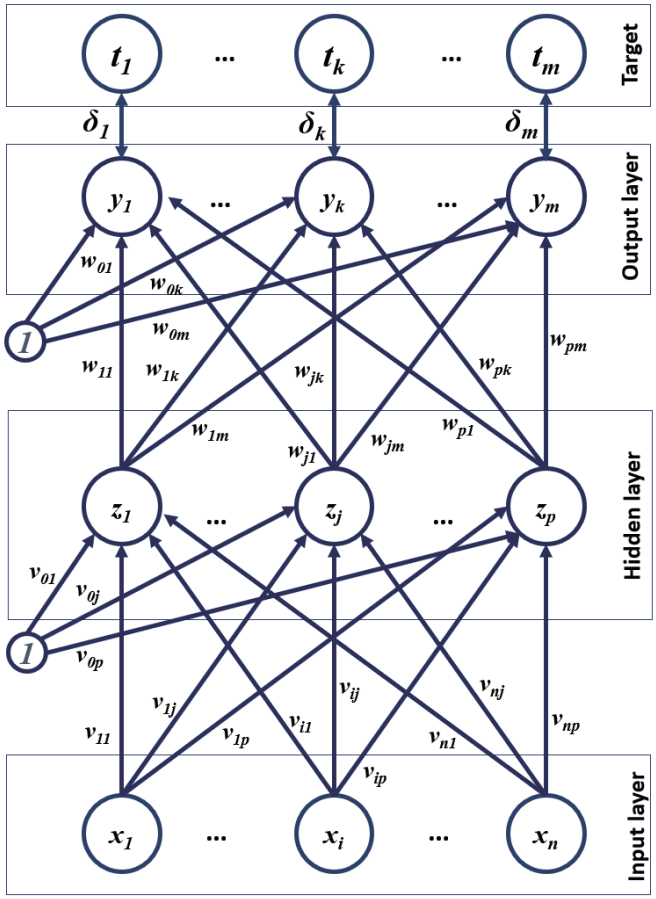

Fig. 3 Backpropagation neural network illustration

After got the output value (y_k) in each output layer neuron, the error propagation (δ_k) is calculated by comparing the output (y_k) with the supposed output (targeted) t_k in accordance with the training data used at the time.

$$\delta_k = (t_k - y_k) f'(y_in_k) \quad (6)$$
$$\Delta w_{jk} = (\alpha \delta_k z_j) \quad (7)$$

after the error value is obtained Δw_{jk}, it will be used as a reference for updating the weight $w_{jk}(new)$

$$w_{jk}(new) = w_{jk}(old) + \Delta w_{jk} \quad (8)$$

Likewise, errors in hidden layers Δv_{ij} and correction for hidden layer weights $v_{ij}(new)$ can be calculated using the following equation

$$\delta_in_j = \sum_{k=1}^{m} \delta_k w_{jk} \quad (9)$$
$$\delta_j = \delta_in_j f'(z_in_j) \quad (10)$$
$$\Delta v_{ij} = (\alpha \delta_j x_i) \quad (11)$$
$$v_{ij}(new) = v_{ij}(old) + \Delta v_{ij} \quad (12)$$

The learning process is carried out as many as the specified iteration or after reaching a very small error value. In this study, the series of processes above are written in the MATLAB and run it with the data form the table 1 for the offline the learning process to get the final weight for the feedforward process in the Machine Learning.

Authorized licensed use limited to: Universidad Nacional Autonoma De Mexico (UNAM). Downloaded on April 11,2026 at 16:35:36 UTC from IEEE Xplore. Restrictions apply.

TABLE 1
TRAINING DATA

Input			Output					
Hall A	Hall B	Hall C	Ah	Al	Bh	Bl	Ch	Cl
1	0	1	1	0	0	1	0	0
1	0	0	1	0	0	0	0	1
1	1	0	0	0	1	0	0	1
0	1	0	0	1	1	0	0	0
0	1	1	0	1	0	0	1	0
0	0	1	0	0	0	1	1	0

To realize a reliable Machine Learning in the six-step Commutation process, the accuracy and speed of the process are important. If many neurons are used, the computation time will increase. But if there are too few neurons, the accuracy can be bad[8]. For this reason, several configurations of the hidden layer's neurons have been simulated with MATLAB and the results are as shown in table 2.

TABLE 2
SIMULATION RESULTS FOR SELECTING THE NUMBER OF HIDDEN LAYER'S NEURON

No	Number of hidden layer's neuron	execute time (s)	Accuracy %
1	1	0.000292	0
2	2	0.000432	100
3	3	0.000719	100

Machine Learning System Realization

From these results, the configuration of 2 neurons in the hidden layer is selected. So the Feedforward neural network configuration used in the embedded machine learning is three neurons in the input layer, 2 neurons in the hidden layers and 6 neurons in the output layer (Figure 4)

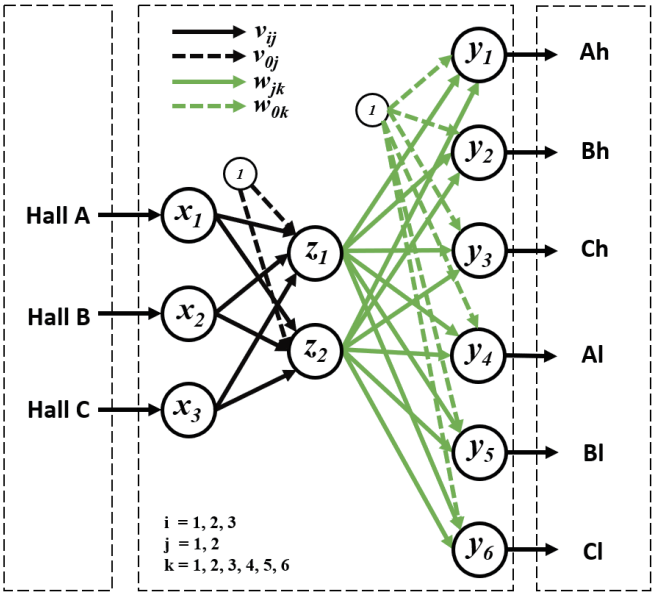

Fig. 4 Proposed Machine Learning Network

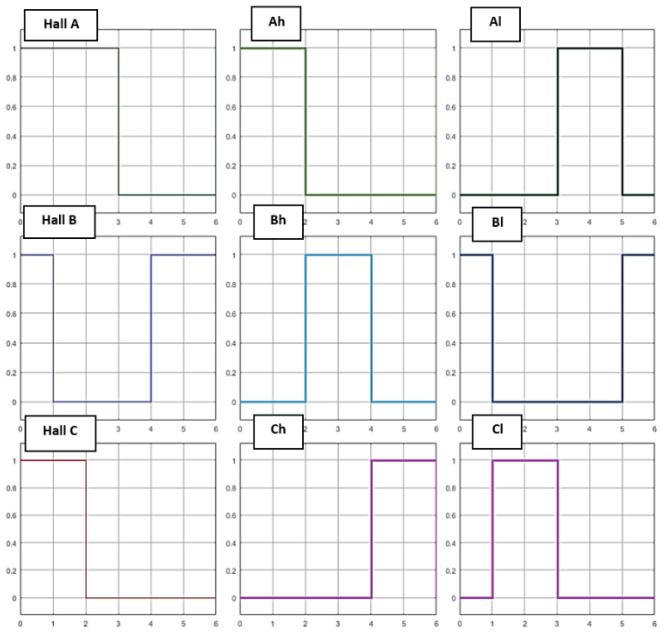

Fig. 5 test results by providing a Hall Sensor signal simulation

Result and Discussion

After the configuration is selected and the offline learning process was done, the next step is testing the network to see it's performance. The expected results must be 100% correct in recognizing the six input variation of six-step commutation. The final weight obtained is then transferred to be the weight value of the Machine Learning that is designed using Simulink.

In the implementation process, embedded code from Machine Learning is applied to the F28069M microcontroller module from Texas Instrument. The Machine learning scheme was developed based on the proposed network (Figure4). To ensure the Machine Learning runs well, a simulation test was done by using simulated hall sensor signal. The results can be seen in Figure 5. Machine Learning has been able to recognize the simulated input patterns and gave the correct output patterns according to the six-step commutation method and will be applied to the open-loop system, as shown in figure 6.

ISBN: 978-1-7281-8712-9
Authorized licensed use limited to: Universidad Nacional Autonoma De Mexico (UNAM). Downloaded on April 11,2026 at 16:35:36 UTC from IEEE Xplore. Restrictions apply.

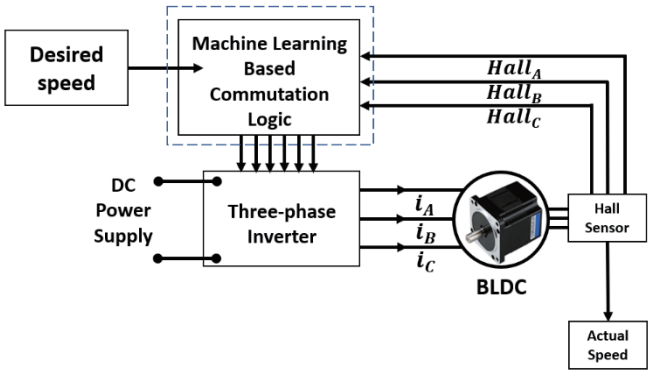

Fig. 6 Experimental realization scheme

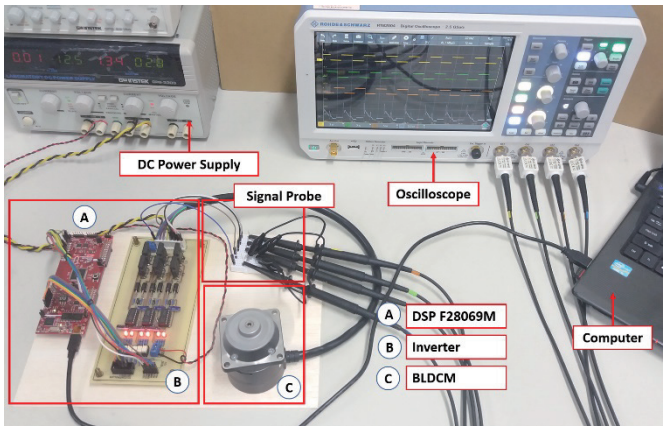

Fig. 7 Hardware configuration

Fig. 8 Three Hall Sensor signal and B-phase voltage at 600rpm

A set of hardware configuration was used to realize the proposed method (Figure 7). The embedded code is generated and uploaded to the DSP F28069M microcontroller (A) and the control signal is passed to the inverter (B) that control a BLDC motor. A DC power supply is used to energize the system and as the main source to drive the motor.

The BLDC commutation system was created in an open-loop mode, so the rotation speed reference is the clock time. Figure 8 show the relation between three hall signal and the phase voltage of phase B. Figure 8 shows that ML output can be used as a reference for BLDCM motor commutation. The next research will try to make a close loop control and combine it with some control strategy.

Conclusion

The results of the study prove that Machine Learning can do commutation with the six-step method. By using the offline training Backpropagation method, with two neurons in one hidden layer, the Machine Learning for six-step commutation can provide a perfect response to the three hall sensor input conditions.

Reference

[1] C. Xia, *Permanent Magnet Brushless DC Motor Drives and Controls*. John Wiley & Sons, 2012.

[2] A. Mohammad, Md. A. Abedin, and Md. Z. R. Khan, "Implementation of a three phase inverter for BLDC motor drive," in *2016 9th International Conference on Electrical and Computer Engineering (ICECE)*, Dhaka, Bangladesh, Dec. 2016, pp. 337–340, doi: 10.1109/ICECE.2016.7853925.

[3] H.-C. Wu, M.-Y. Wen, and C.-C. Wong, "Speed control of BLDC motors using hall effect sensors based on DSP," in *2016 International Conference on System Science and Engineering (ICSSE)*, Puli, Taiwan, Jul. 2016, pp. 1–4, doi: 10.1109/ICSSE.2016.7551633.

[4] J. C. Gamazo-Real, E. Vázquez-Sánchez, and J. Gómez-Gil, "Position and Speed Control of Brushless DC Motors Using Sensorless Techniques and Application Trends," *Sensors*, vol. 10, no. 7, pp. 6901–6947, Jul. 2010, doi: 10.3390/s100706901.

[5] Z. Makni and W. Zine, "Rotor position estimator based on machine learning," in *IECON 2016 - 42nd Annual Conference of the IEEE Industrial Electronics Society*, Florence, Italy, Oct. 2016, pp. 6687–6692, doi: 10.1109/IECON.2016.7793911.

[6] A. Bilal, A. Waheed, and M. H. Shah, "A Comparative Study of Machine Learning Algorithms for Controlling Torque of Permanent Magnet Synchronous Motors through a Closed Loop System," in *2019 Second International Conference on Latest trends in Electrical Engineering and Computing Technologies (INTELLECT)*, Karachi, Pakistan, Nov. 2019, pp. 1–6, doi: 10.1109/INTELLECT47034.2019.8955467.

[7] R. Kumar and S. V. Padmanaban, "An Artificial Neural Network Based Rotor Position Estimation for Sensorless Permanent Magnet Brushless DC Motor Drive," in *IECON 2006 - 32nd Annual Conference on IEEE Industrial Electronics*, Paris, France, Nov. 2006, pp. 649–654, doi: 10.1109/IECON.2006.347440.

[8] M. Azmi, D. S. Putra, W. Purwanto, T. Sugiarto, and D. Fernandez, "Implementasi Jaringan Syaraf Tiruan untuk Mengendalikan Lampu Sein Sepeda Motor," *INVOTEK J. Inov. Vokasional Dan Teknol.*, vol. 19, no. 2, pp. 75–82, Oct. 2019, doi: 10.24036/invotek.v19i2.622.

Authorized licensed use limited to: Universidad Nacional Autonoma De Mexico (UNAM). Downloaded on April 11,2026 at 16:35:36 UTC from IEEE Xplore. Restrictions apply.