Sensorless Speed Control of Brushless DC Motor using Artificial Neural Network Predicted Back EMF

Md Akhtar Ali
Department of Electronics and Communication Engineering,
Amrita School of Engineering, Coimbatore,
Amrita Vishwa Vidyapeetham, India
akhtar.wbc@gmail.com

Sindhu M. R
Department of Electrical and Electronics Engineering,
Amrita School of Engineering, Coimbatore,
Amrita Vishwa Vidyapeetham, India
mr_sindhu@cb.amrita.edu

Duvvuri S P Ramakrishna
Technical Lead,
Tata Consultancy Services
Synergic Park, Hyderabad, India

2024 IEEE International Conference on Power Electronics, Drives and Energy Systems (PEDES) | 979-8-3503-7247-2/24/$31.00 ©2024 IEEE | DOI: 10.1109/PEDES61459.2024.10961065

***Abstract*— Electric Vehicles (EVs) are increasingly preferred over Internal Combustion Engine (ICE) vehicles due to their eco-friendliness. Brushless DC (BLDC) motors are ideal for EVs because of their efficiency and low maintenance. Traditional BLDC motor control uses position sensors, which are expensive and complex. Sensorless control, which does not rely on these sensors, is more desirable. A typical sensorless technique is to detect the Back Electromotive Force (BEMF) in the motor phase, but this is difficult at low speeds and sensitive to noise. The suggested method is a Sensorless Speed Control for BLDC motors using an Artificial Neural Network (ANN) to analyze BEMF. The ANN learns the correlation between BEMF zero crossing signals and the hall sensor's equivalent emf. This aids in precise rotor position and speed determination, leading to correct motor drive signals. This method's benefits include noise resistance, the absence of extra sensors or circuits, and effective operation at all speeds. TI Motor Control Board is used for testing and MATLAB Simulink is used for comparative analysis. The torque and current ripples are significantly reduced by using ANN BEMF method, and the speed regulation is improved.**

Keywords*— *Brushless DC (BLDC) motor, Hall Sensor, Back EMF, Artificial Neural Network (ANN), Torque ripple, PWM control, Speed control

I. Introduction

For Electric Vehicle (EV) propulsion, Brushless DC (BLDC) offers silent operation, high efficiency, and high torque-to-weight ratio hence making it popular for use in electric vehicles[1]. It is important to pay attention to speed control and torque ripples to ensure that travel with an EV feels as comfortable as using an Internal Combustion (IC) Engine[2], [3]. As such, ideal controller must be designed to minimize torque ripple effect as well as regulate speed effectively. In EVs, the BLDC Motor directly drives the wheels eliminating gearboxes thus reducing power losses within the system. The motor controller uses data from various sensors to regulate the speed and torque of the BLDC Motor for smooth acceleration and deceleration during operation[1], [2], [4]. The speed variations cause ripple effects in the motor's generated electromagnetic torque and current, reducing the motor's efficiency and causing rapid damage. Therefore, in addition to precision speed control, fluctuations in current and torque must be considered[2], [4].

Conventional BLDC motor control requires position sensors, such as Hall effect sensors, to provide feedback signals for speed regulation and commutation[1], [2], [5]. However, these sensors can affect the motor's reliability and performance, increasing the system's cost, complexity and noise. To overcome these issues, sensorless control techniques has been implemented that estimate the motor's Back Electromotive Force (BEMF) have been developed.

BEMF is induced in the motor's windings which is proportional to the speed of the motor and rotor flux[1], [6], [7]. The controller can measure back-EMF signals from motor terminals to determine when stator currents should be optimally switched on/off and how fast the motor should rotate. However, BEMF-based sensorless control method face challenges such as low-speed operation and speed/load variations[7].

Artificial Neural Network (ANN) Back EMF method learns the nonlinear relationship between the motor's back EMF zero crossing signals and the equivalent EMF generated by Hall Sensors[8], [9], [10]. The controller, which generates switching signals for the motor drive system, enhances accuracy and robustness in prediction and speed control. The work aims to design a Sensorless Control Algorithm using ANN Back EMF for Electric Vehicle (EV) applications, ensuring accurate speed control, reducing torque and current ripples, and eliminating the use of Position/Hall Sensors. The proposed technique's performance has been analysed using simulation, studies with the New European Drive Cycle in MATLAB/ SIMULINK, and hardware implementation has been done with Texas Instrument Evaluation board[11].

II. Modelling of Brushless DC Motor

Equivalent circuit of BLDC motor is shown in Fig. 1[3].

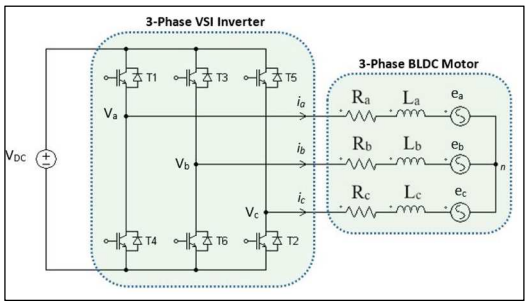

Fig. 1 Equivalent circuit of 3-phase BLDC Motor

The following set of equations can be used to illustrate the BLDC motor's mathematical model.

Terminal Voltage of BLDC motor is given by:

$$V_{an} = R_a i_a + \frac{d}{dt}(L_a i_a + M_{ab} i_b + M_{ac} i_c) + e_{an} \quad (1)$$

$$V_{bn} = R_b i_b + \frac{d}{dt}(L_b i_b + M_{ba} i_a + M_{bc} i_c) + e_{bn} \quad (2)$$

$$V_{cn} = R_c i_c + \frac{d}{dt}(L_c i_c + M_{ca} i_a + M_{cb} i_b) + e_{cn} \quad (3)$$

979-8-3503-7247-2/24/$31.00 ©2024 IEEE

Authorized licensed use limited to: Universidad Nacional Autonoma De Mexico (UNAM). Downloaded on January 20,2026 at 19:36:21 UTC from IEEE Xplore. Restrictions apply.

where V_{an}, V_{bn}, V_{cn} are the terminal voltages of BLDC Motor. R_a, R_b, R_c are the stator resistance. i_a, i_b, i_c are the stator current of BLDC Motor. L_a , L_b , L_c are the self-inductances of BLDC Motor. M_{ab}, M_{ba}, M_{ca}, M_{ac}, M_{bc}, M_{cb} are the mutual inductances of the BLDC Motor. e_{an}, e_{bn}, e_{cn} are the Back EMF of the BLDC Motor.

Since the 3-phase Stator windings are balanced, Self-Inductances and Mutual Inductance will be identical. Therefore, Stator Resistance, Self-Inductance and Mutual Inductance will be:

$$R_a = R_b = R_c = R_s \tag{4}$$

$$L_a = L_b = L_c = L \tag{5}$$

$$M_{ab} = M_{ba} = M_{ca} = M_{ac} = M_{bc} = M_{cb} = M \tag{6}$$

Since the Motor is Star Connected, therefore Stator current will be balance with the equation as:

$$i_a + i_b + i_c = 0 \tag{7}$$

$$Mi_a + Mi_b + Mi_c = 0 \tag{8}$$

With the above conditions, equations 1, 2, 3 will become:

$$V_{an} = R_s\, i_a + \frac{d}{dt}(L - M)i_a + e_{an} \tag{9}$$

$$V_{bn} = R_s\, i_b + \frac{d}{dt}(L - M)i_b + e_{bn} \tag{10}$$

$$V_{cn} = R_s\, i_c + \frac{d}{dt}(L - M)i_c + e_{cn} \tag{11}$$

Where, R_s equivalent Stator Resistance, L is equivalent Self Inductance, M is equivalent Mutual Inductance and $(L - M)$ is Phase Inductance.

The Trapezoidal Back EMF of BLDC Motor is represented by:

$$e_a = K_e.\omega_m.\cos\theta_r \tag{12}$$

$$e_b = K_e.\omega_m.\cos(\theta_r - {}^{2\pi}/_{3}) \tag{13}$$

$$e_c = K_e.\omega_m.\cos(\theta_r + {}^{2\pi}/_{3}) \tag{14}$$

Where Ke is Back EMF Constant, ω_m is mechanical speed in rad/s and θ_r is the rotor angle of BLDC Motor.

The electromagnetic torque (T_{em}) developed by the BLDC motor is given by the following expression:

$$T_{em} = \frac{e_a i_a + e_b i_b + e_c i_c}{\omega_m} \tag{15}$$

This torque accelerates the motor by driving a mechanical load and overcoming inertia and friction. This can also be expressed as:

$$T_{em} = T_L + J_m.\frac{d\omega_m}{dt} + B\omega_m \tag{16}$$

where T_L is the load torque, J_m is moment of inertia, B is coefficient of friction.

Also, Mechanical Speed of the Motor is related by the equation:

$$P.\omega_m = \frac{d\theta_r}{dt} \tag{17}$$

where P is the number of poles of the motor.

III. Conventional Control Methods

A. Hall Sensor based method

BLDC motors are extensively employed in a variety of applications requiring for precise control, minimal maintenance, and great efficiency. Using Hall effect sensors—which are installed on the motor and produce digital signals that correspond to the magnetic poles of the rotor—is one way to get the position information of the rotor[1], [12], [13]. The motor controller uses these signals to create the proper Pulse-Width-Modulation (PWM) signals for the stator coils, which allows the BLDC motor to be controlled in terms of speed[14], [15].

Block Diagram of BLDC Motor using Hall Sensor is given is Fig. 2[13].

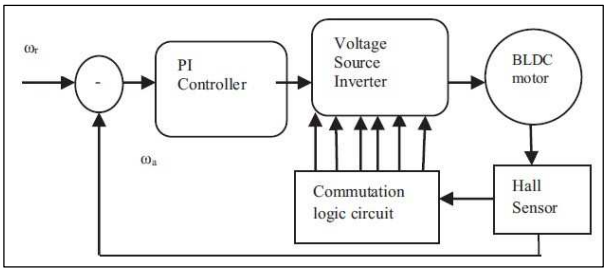

Fig. 2 Block Diagram of BLDC Motor using Hall Sensor

Hall Sensor Based Motor control is simple to implement but has some drawbacks like Higher maintenance cost due to wear out over time, Limited maximum speed due to constrained by the commutator's capabilities, Electrical noise due to the presence of high switching PWM pluses, Miscommutation or Temperature variance[12].

B. Back EMF based method

Another method to control the speed of BLDC Motor is by using the Back EMF, which is already present on the motor's windings when the motor rotates[6], [7], [13]. This will reduce the cost of the controller as no hall sensor is used to calculate the position of rotor. Back EMF is a voltage that is proportional to the rotor's angular velocity and works in opposite to the applied voltage. The rotor position and speed of a BLDC motor can be obtained by measuring the back EMF of its non-energized phase[6], [13].

Block Diagram of BLDC Motor using BEMF method is given in Fig. 3[6].

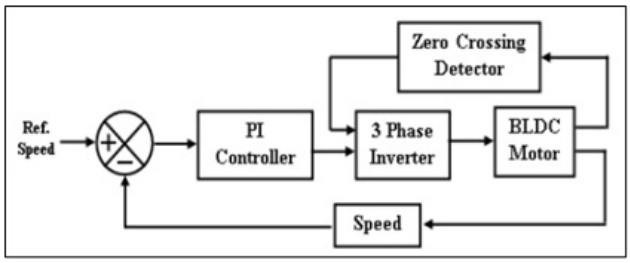

Fig.3 Block Diagram of BLDC Motor using BEMF Method

However, sensorless speed control of BLDC motor using back EMF also has some drawbacks, such as[1]:

Authorized licensed use limited to: Universidad Nacional Autonoma De Mexico (UNAM). Downloaded on January 20,2026 at 19:36:21 UTC from IEEE Xplore. Restrictions apply.

i). Zero Crossing detection

ii). Low Speed Operation

iii) Standstill or Reverse Operation

IV. Sensorless Artificial Neural Network BEMF Method

Artificial Neural Networks (ANNs) are computational models inspired by the human brain's interconnected network of neurons. They consist of layers of nodes, or "neurons," that process information through weighted connections. ANNs learn to perform tasks by considering examples, generally without task-specific programming. They adaptively improve their performance as they receive more data. Their versatility and efficiency have revolutionized the field of artificial intelligence, offering insights and solutions across diverse industries[8], [9], [16].

Artificial Neural Network Back EMF estimation method uses an Artificial Neural Network to learn the nonlinear relationship between the motor's back EMF zero crossing signals and equivalent emf generated by Hall sensor. The estimated speed is then compared to a predefined reference speed. The outcomes are then fed into PID Controller. This controller generates switching signals, for the motor drive system.

Artificial Neural Networks have the ability to learn characteristics of motors and compensate for back EMF measurement errors and noise thereby enhancing accuracy and robustness in prediction and speed control. Additionally due to their adaptability to changes in motor attributes and dynamics, Artificial Neural Networks can operate effectively at low speeds and in speed/load change scenarios[8], [14], [16].

Block diagram of proposed ANN BEMF based method is shown in Fig. 4.

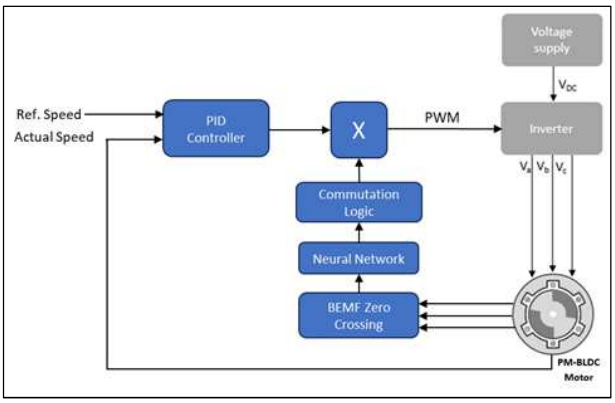

Fig. 4 Block Diagram of ANN BEMF Method

Simulink model for dataset collection is given in Fig. 7. For Simulation, the reference speed is taken as New European Driving Cycle. This Model runs the BLDC Motor using Hall sensor. In this model, BEMF zero crossing and Hall sensor's equivalent emf are saved in MATLAB workspace which will be used as input and output parameters for ANN model.

BLDC Motor parameters used in simulation and for hardware implementation is given in Table I.

Table I. BLDC Motor Parameter

BLDC Parameter	Values
No. of Phases	3
Back EMF	Trapezoidal
Pole Pair	5
Stator Resistance	2.015 Ω
d-axis Inductance	0.0023 H
q-axis Inductance	0.0023 H
BEMF Constant	8.36951
Torque Constant	0.0691326 Nm/A
Inertia	4.434e-6 kg-m^2

The ANN model has been trained using Scaled Conjugate Gradient Algorithm[9]. Fig. 5 and Fig. 6 shows the Regression plot and Performance Plot of the ANN model respectively. Simulink Model for Sensorless ANN BEMF Model has been developed and given in Fig. 8. In this model, zero-crossing of the Back EMF is taken as input to the ANN block and Hall EMF are output of the ANN block.

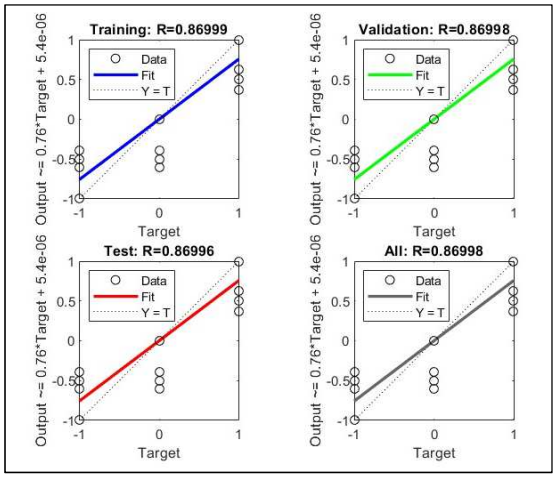

Fig. 5 Regression Plot of ANN Model for Simulation

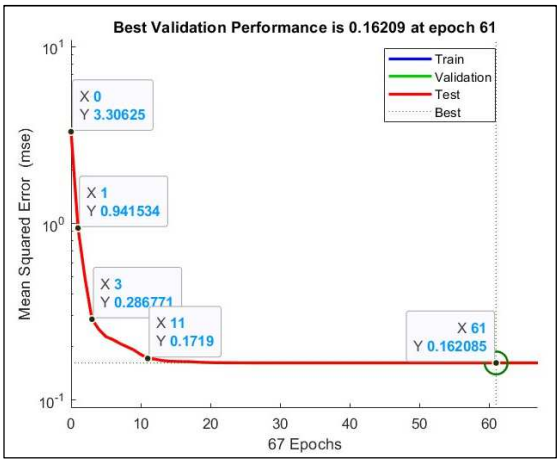

Fig. 6 Performance Plot of ANN Model for Simulation

Authorized licensed use limited to: Universidad Nacional Autonoma De Mexico (UNAM). Downloaded on January 20,2026 at 19:36:21 UTC from IEEE Xplore. Restrictions apply.

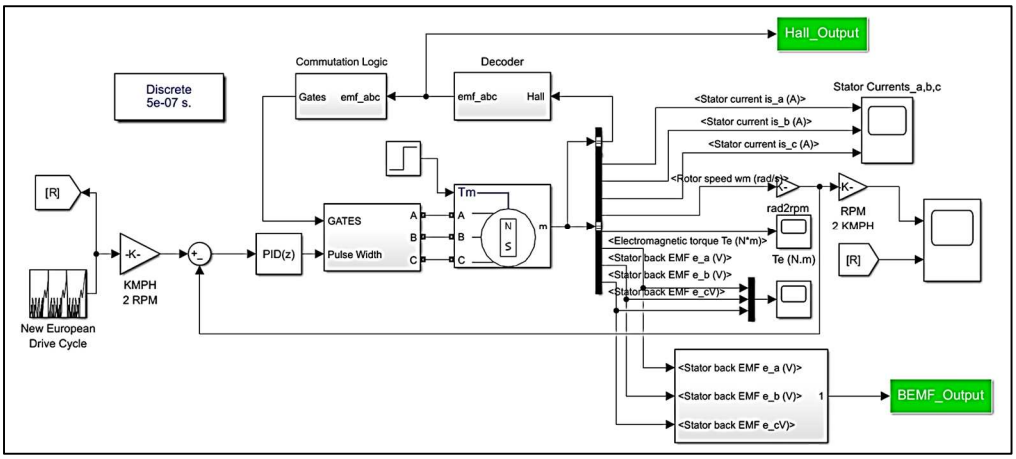

Fig. 7 Simulink model for Dataset Collect

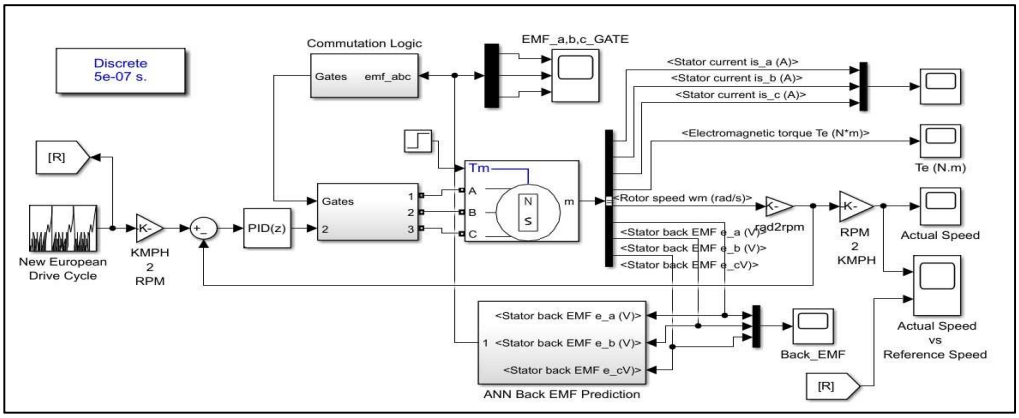

Fig. 8 Simulink Model of Sensorless ANN BEMF Method

V. Results

A. Simulation Results

All the three methods Hall Sensor Based, BEMF Based and ANN BEMF based run with constant speed of 50 km/h to observe the variation in Electromagnetic Torque and Stator Current developed in BLDC Motor with a step load torque applied. Fig. 9 shows the changes in Electromagnetic Torque developed and Fig. 10 shows changes in Stator Current in the Motor.

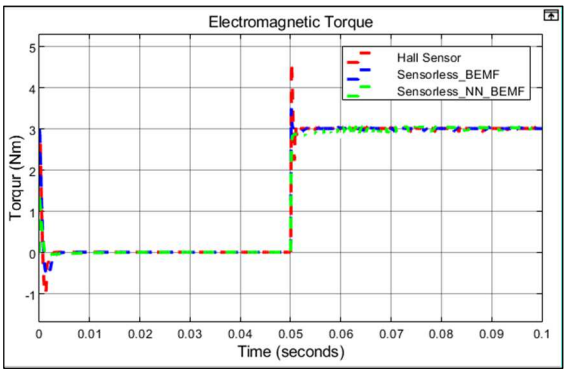

Fig. 9 Electromagnetic Torque Developed

From Fig. 9 (a), we can observe that the starting torque is high in Hall Sensor and BEMF methods as compared to ANN BEMF method. ANN BEMF method provides a better torque output as compared to the other two methods by having less overshoot and settling time during change in torque given in Fig. 9(b).

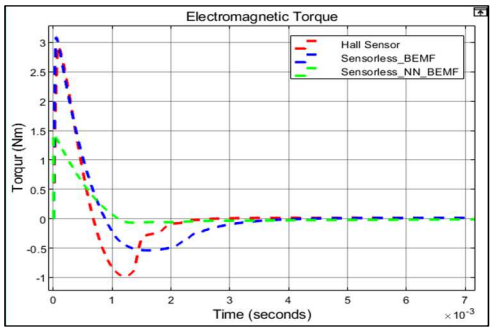

Fig. 9 (a) Starting Electromagnetic Torque

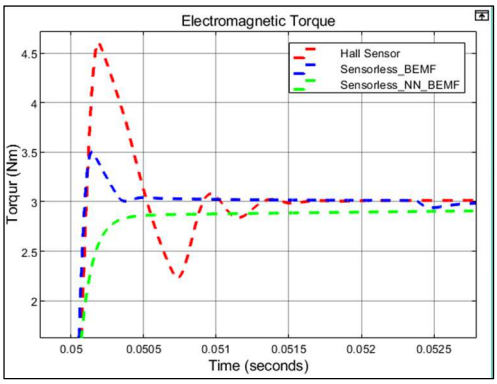

Fig. 9 (b) Change in Electromagnetic Torque

From Fig. 10 we can observe there is reduction in Stator current in ANN BEMF method as compared to both Hall Sensor and BEMF methods. Hall Sensor and BEMF method

Authorized licensed use limited to: Universidad Nacional Autonoma De Mexico (UNAM). Downloaded on January 20,2026 at 19:36:21 UTC from IEEE Xplore. Restrictions apply.

provides high current as compared to ANN BEMF methods for the same speed and load torque applied.

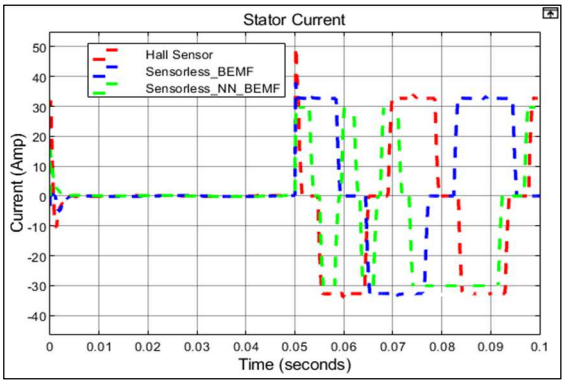

Fig. 10 Stator Current

Fig. 11 shows Reference Speed vs Actual Speed of all the model. From Fig. 12, we can observe that at a lower speed of 15 km/h, BEMF method is not able to trace its reference speed. It lags the reference speed by almost 1.5 km/h. Even Hall Sensor method is also not able to trace the reference speed and lags about 0.2 km/h, while Sensorless ANN method is able to trace the reference speed. With a high speed of 120 km/h, Hall Sensor and BEMF method still lags its reference speed with 0.5 km/h and 1.25 km/h respectively.

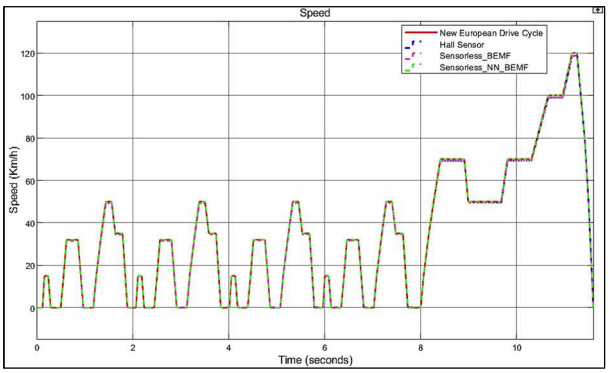

Fig. 11 Ref. Speed vs Actual Speed using Hall Sensor, BEMF and ANN BEMF Method for NEDC

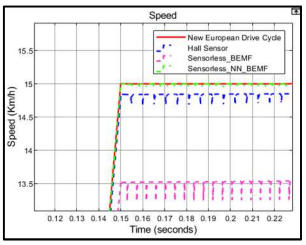

Speed at 15 km/h

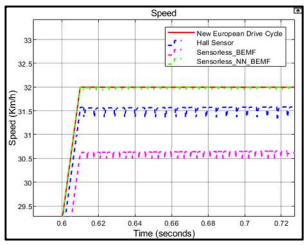

Speed at 32 km/h

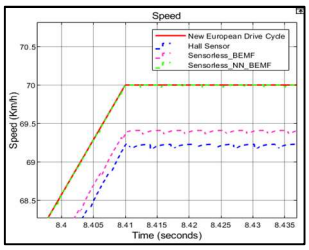

Speed at 70 km/h

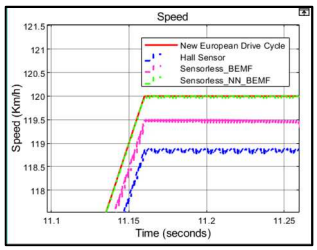

Speed at 120 km/h

Fig. 12 Ref. Speed vs Actual Speed at different speed levels from Fig.11

We can observe from Fig. 12 that more ripples are present in actual speed of all the other methods while Sensorless ANN model has very less or negligible ripples in the speed at different levels.

Table II. Comparison of all the three Methods

Method	Torque	Current	Speed
Hall Sensor	Highest during load torque change	Highest among all the three methods.	Lags about 0.2 km/h at low speed and 1 km/h at high speed along with the presence of ripples.
Back EMF	Highest at the starting.	Equals to Hall sensor with less transient change.	Lags about 1.5 km/h at low speed and 0.5 km/h at high speed with ripples present.
NN BEMF	Least at starting and no overshoot during change in load torque.	Least current among all the three methods.	Able to follow the reference at all speed levels with less or negligible ripples.

B. *Experimental setup and Results*

The experimental setup of the Sensorless ANN model has been developed using Texas Instruments Evaluation Boards. These boards comprises of a Inverter Module (DRV8305N 3-Phase Motor Drive Evaluation Module) along with Microcontroller Board (F28069M LaunchPad development kit for C2000 Piccolo MCU). Three phase 24 V BLDC Motor has been taken for the evaluation. The dataset has been taken using Hall Sensor method at various different speed. Overall Dataset has been taken for 24 min 16 sec at speed ranges from 0-3000 rpm.

Serial Transmission is used to send the data from the Microcontroller board to MATLAB[11]. Fig. 13 shows the experimental setup for Sensorless ANN BEMF model. Fig. 14 and Fig. 15 shows the Regression plot and performance plot obtained using the ANN model from the dataset obtained for the hardware model. The ANN model has been trained using Scaled Conjugate Gradient Algorithm. Overall efficiency of the model obtained is found to be 84.724% while the Mean Square Error (MSE) has been reduced from 3.429 to 0.165.

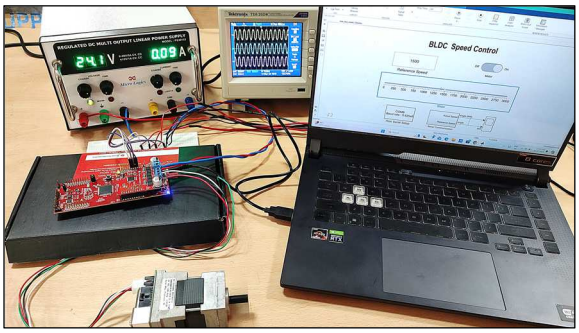

Fig. 13 Experimental setup for Sensorless ANN BEMF model

Authorized licensed use limited to: Universidad Nacional Autonoma De Mexico (UNAM). Downloaded on January 20,2026 at 19:36:21 UTC from IEEE Xplore. Restrictions apply.

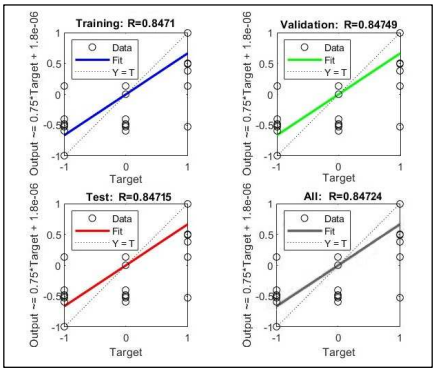

Fig. 14 Regression plot of ANN model for Hardware

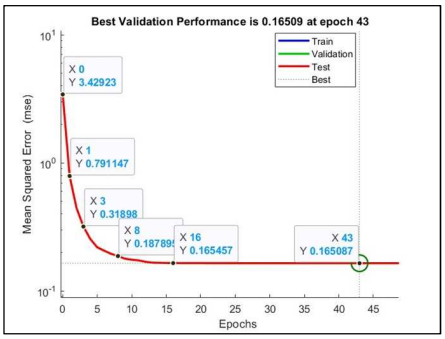

Fig. 15 Performance Plot of ANN model for Hardware

Fig. 16 shows the SIMULINK model to implement Sensorless ANN BEMF method. This model has the trained NN block where the inputs are taken from running the BLDC motor using Hall Sensor. The dataset has been taken with input as BEMF zero crossing point and output as equivalent emf generated by Hall Sensor using Serial Transmission.

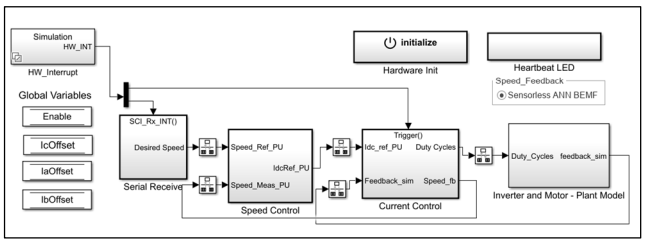

Fig. 16 Simulink model for Sensorless ANN BEMF method

Fig. 17 shows the ANN block implemented in SIMULINK model for Sensorless ANN BEMF method.

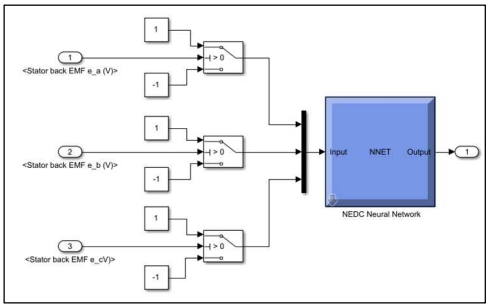

Fig. 17 ANN Block for Sensorless ANN BEMF model

Fig. 18 shows the variation of BEMF signals at different speeds. Fig. 18 (a) shows the BEMF signal at a speed of 50 rpm. We can find that at this very low speed, it's difficult to predict the zero crossing which helps to run the BLDC Motor using BEMF only. The ANN model has the advantage over it and compensate for the loss of zero crossing. ANN model provides the accurate zero crossing even for low speed by learning for the dataset being given to the model.

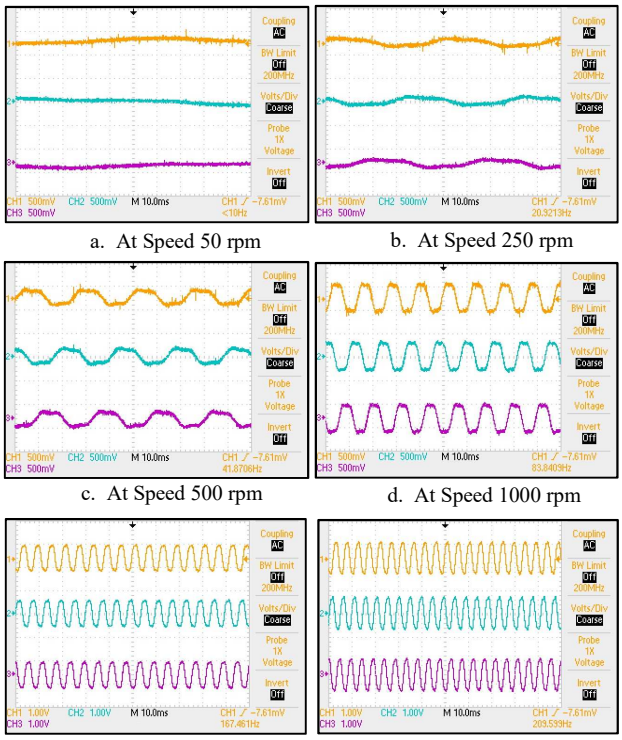

a. At Speed 50 rpm b. At Speed 250 rpm

c. At Speed 500 rpm d. At Speed 1000 rpm

e. At Speed 1500 rpm f. At Speed 2500 rpm

Fig. 18 Variation of BEMF Signals at different Speed (rpm)

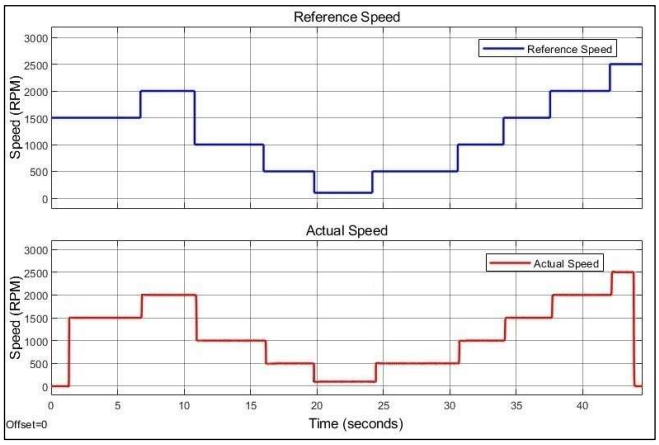

Fig. 19 Reference Speed vs Actual Speed for Hardware Model

Fig. 19 shows the Speed Comparison between reference speed and actual speed given to BLDC motor. We can able to find that the Sensorless ANN BEMF method is able to trace its reference speed at all speed changes without any overshoot and having settling time.

VI. Conclusion

This study develops the Sensorless ANN BEMF method for BLDC motor drive and tests its performance with a modelled NEDC. Considering torque, current, and speed control performance, the proposed Sensorless ANN BEMF approach is compared with the Hall Sensor and Sensorless BEMF methods. It has been found that the TI Evaluation Board is a better option for hardware implementation when it

Authorized licensed use limited to: Universidad Nacional Autonoma De Mexico (UNAM). Downloaded on January 20,2026 at 19:36:21 UTC from IEEE Xplore. Restrictions apply.

comes to improved speed regulation. In the NEDC scenario, where the reference speed is constantly fluctuating, Sensorless ANN BEMF provides optimal performance and dynamic response. In the future, the Sensorless ANN BEMF approach can be improved by increasing the number of datasets collected and by making algorithm testing and deployment simple.

REFERENCES

[1] D. Mohanraj et al., "A Review of BLDC Motor: State of Art, Advanced Control Techniques, and Applications," IEEE Access, vol. 10. Institute of Electrical and Electronics Engineers Inc., pp. 54833–54869, 2022. doi: 10.1109/ACCESS.2022.3175011.

[2] N. Prabhu, R. Thirumalaivasan, and B. Ashok, "Critical Review on Torque Ripple Sources and Mitigation Control Strategies of BLDC Motors in Electric Vehicle Applications," *IEEE Access*, vol. 11. Institute of Electrical and Electronics Engineers Inc., pp. 115699–115739, 2023. doi: 10.1109/ACCESS.2023.3324419.

[3] P. Ketaki and M. R. Sindhu, "Model Predictive Control (MPC) Based BLDC Drive for Indian Drive Cycle," in *2023 IEEE 8th International Conference for Convergence in Technology, I2CT 2023*, Institute of Electrical and Electronics Engineers Inc., 2023. doi: 10.1109/I2CT57861.2023.10126284.

[4] T. Govind and S. Sampath Kumar, "Speed Control of Smart Induction Motor using Model Predictive Direct Torque Control and Fuzzy Gain Scheduling," in *3rd International Conference on Smart Electronics and Communication, ICOSEC 2022 - Proceedings*, Institute of Electrical and Electronics Engineers Inc., 2022, pp. 8–13. doi: 10.1109/ICOSEC54921.2022.9951985.

[5] L. Wang, Z. Q. Zhu, H. Bin, and L. Gong, "A Commutation Optimization Strategy for High-Speed Brushless DC Drives With Voltage Source Inverter," *IEEE Trans Ind Appl*, vol. 58, no. 4, pp. 4722–4732, 2022, doi: 10.1109/TIA.2022.3170290.

[6] D. S. Sawant, Y. S. Rao, and R. R. Sawant, "Sensorless Control of a BLDC Motor using Back-EMF Detection Method," in *2023 International Conference for Advancement in Technology, ICONAT 2023*, Institute of Electrical and Electronics Engineers Inc., 2023. doi: 10.1109/ICONAT57137.2023.10079963.

[7] T. Li and J. Zhou, "High-Stability Position-Sensorless Control Method for Brushless DC Motors at Low Speed," *IEEE Trans Power Electron*, vol. 34, no. 5, pp. 4895–4903, May 2019, doi: 10.1109/TPEL.2018.2863735.

[8] Y. Lu, J. Huang, Z. Jiang, T. Tang, H. Tang, and L. Shi, "PID Adaptive Feedback Motor System Based on Neural Network," *IEEE Access*, 2024, doi: 10.1109/ACCESS.2024.3393029.

[9] X. B. Jin, X. Y. Zhang, K. Huang, and G. G. Geng, "Stochastic Conjugate Gradient Algorithm With Variance Reduction," *IEEE Trans Neural Netw Learn Syst*, vol. 30, no. 5, pp. 1360–1369, May 2019, doi: 10.1109/TNNLS.2018.2868835.

[10] A. Mamadapur and G. Unde Mahadev, "Speed Control of BLDC Motor Using Neural Network Controller and PID Controller," in 2019 2nd International Conference on Power and Embedded Drive Control (ICPEDC), 2019, pp. 146–151. doi: 10.1109/ICPEDC47771.2019.9036695.

[11] M. Rossi, N. Toscani, M. Mauri, and F. Castelli Dezza, Introduction to Microcontroller Programming for Power Electronics Control Applications: Coding with MATLAB® and SIMULINK®, Boca Raton, USA: CRC Press, 2021. Available: https://doi.org/10.1201/9781003196938.

[12] L. Yang, Z. Q. Zhu, L. Gong, and H. Bin, "PWM Switching Delay Correction Method for High-Speed Brushless DC Drives," IEEE Access, vol. 9, pp. 81717–81727, 2021, doi: 10.1109/ACCESS.2021.3085212.

[13] S. Raja and M. Rathinakumar, "A Comparative study on the effectiveness of sensor and sensor-less based techniques for a BLDC Motor drive with PI Controller," in 2019 2nd International Conference on Power and Embedded Drive Control (ICPEDC), 2019, pp. 179–184. doi: 10.1109/ICPEDC47771.2019.9036638.

[14] P. Shijil and M. R. Sindhu, "Braking control strategies based on single-pedal regenerative braking and neural network for Electric Vehicles," in 2021 IEEE International Power and Renewable Energy Conference, IPRECON 2021, Institute of Electrical and Electronics Engineers Inc., 2021. doi: 10.1109/IPRECON52453.2021.9640722.

[15] N. Praveen Kumar and T. B. Isha, "Application of empirical wavelet transform for analyzing inter-turn fault in FEM based closed loop speed controlled induction motor," in *9th IEEE International Conference on Power Electronics, Drives and Energy Systems, PEDES 2020*, Institute of Electrical and Electronics Engineers Inc., Dec. 2020. doi: 10.1109/PEDES49360.2020.9379411.

[16] S. Wongkhead, "State space model for speed control BLDC motor tuning by combination of PI - Artificial neural network controller," in ECTI-CON 2021 - 2021 18th International Conference on Electrical Engineering/Electronics, Computer, Telecommunications and Information Technology: Smart Electrical System and Technology, Proceedings, Institute of Electrical and Electronics Engineers Inc., May 2021, pp. 874–877. doi: 10.1109/ECTI-CON51831.2021.9454756.

Authorized licensed use limited to: Universidad Nacional Autonoma De Mexico (UNAM). Downloaded on January 20,2026 at 19:36:21 UTC from IEEE Xplore. Restrictions apply.