Check for updates

IET Electric Power Applications

Research Article

Rapid estimation and compensation method of commutation error caused by Hall sensor installation error for BLDC motors

ISSN 1751-8660
Received on 11th December 2018
Revised 25th April 2019
Accepted on 26th June 2019
E-First on 7th August 2019
doi: 10.1049/iet-epa.2018.5941
www.ietdl.org

Xuliang Yao[1] ✉, Chenwei Ma[1,2], Jicheng Zhao[1], Frederik De Belie[2]

[1]*Institute of Electrical Engineering, Harbin Engineering University, 145 Nantong Street, Harbin, People's Republic of China*
[2]*Department of Electrical Energy, Metals, Mechanical Constructions & Systems, Ghent University, Science Park 131, Ghent, Belgium*
✉ *E-mail: yaoxuliang@hrbeu.edu.cn*

Abstract: Hall sensors provide significant commutation signals for brushless DC (BLDC) motors. However, installation errors of Hall sensors are almost inevitable for BLDC motors, which can lead to commutation errors, further current ripples and torque ripples. Meanwhile, abnormal diode conducting in inactive phase can be aroused by large commutation errors at high speed. Therefore, the commutation errors make a negative influence on motor efficiency and degrade the performance of BLDC motors. Here, a simple and fast method to estimate the commutation error is proposed. Based on the analysis of the commutation process under commutation error, only the turn-off phase current at the commutation instant is required for the estimation of delayed commutation error, while only the time interval of the turn-off phase current decreasing to zero after commutation instant is needed when advanced commutation occurs. In order not to affect the dynamic performance of a BLDC motor, this study utilises a straightforward compensating method of commutation error. The experimental results represent that the proposed method is effective at different speeds, load torques, and under load-variation with good transient performance.

1 Introduction

Brushless DC (BLDC) motors with advantages of simple structure, high power density, high dynamic response, and simple control have been employed in many industrial areas. Such as manufacturing, robotics, electric vehicles, aerospace, and military [1–4]. In most cases, BLDC motors are driven by an inverter consisting of transistors, which commutate every 60 electrical degrees. The phase commutation relies on the information of rotor position. Therefore, the detection of the rotor position plays a significant role to the overall performance of BLDC motors [5, 6].

Generally, the detection of rotor position is realised by sensors or sensorless technique. For sensorless technique, rotor position can be identified by using motor back electromotive force (EMF), inductance, or flux linkage. Among these, the most prevalent sensorless control technique is the method based on back EMF, which can be further classified into three categories: the back-EMF zero-crossing points (ZCPs) detection [7–10], EMF third-harmonic detection, and freewheeling current sensing [11–14]. In particular, the back-EMF ZCP's detection is widely employed in various applications due to its good feasibility on implementation. The commutation instant can be determined through detecting the neutral point voltage based on the fact that a phase back-EMF ZCP takes place 30 electrical degrees before a commutation instant. Meanwhile, since the neutral point of BLDC motors is not extracted, a resistance network is required to acquire the neutral point voltage. However, the detection of back-EMF ZCPs may cause inexact commutation instants, simply because it is difficult to achieve accuracy on estimating the 30 electrical degrees during transient processes. In fact, during motor acceleration or deceleration, owning to the rotor speed change, an estimation error of 30 electrical degrees is generated. Consequently, such an estimation error makes adverse impact on the speed estimation and the drive performance when motor working in braking mode. The commutation inaccuracy caused by the estimation error can arouse an unexpected torque, which results in an increment in rotor speed and further commutation errors [15]. To solve this problem, a symmetrical threshold-tracking method is proposed in [16], which is based on the magnitude of back EMF rather than the back-EMF ZCPs. The main basis is the fact that the back-EMF magnitude decreases and reaches its former absolute value at the next commutation instant after a commutation instant when motor operates in steady state. This method results in better transient-state performance and more exact commutation instants.

On the other hand, to avoid the complex circuit for obtaining the virtual neutral point, the ZCP of line-to-line voltage can be detected to provide commutation signal [17], as the line-to-line voltage ZCP occurs accompany with the commutation instant. However, both methods suffer from the noise caused by pulse-width modulation (PWM) switching. Under this circumstance, a low-pass filter is required to eliminate the noise, which can lead to commutation instant shift. The maximum electromagnetic torque/ampere can be obtained only when BLDC motor commutating at ideal instants. Furthermore, commutation error can arouse motor efficiency reduction, acoustic noise, degradation of overall electromagnetic performance and reduce the operation range of BLDC motors. In addition, commutation error can also vary as motor parameters [17–19]. Thus, many researchers focus on compensation methods for the commutation error in recent years.

Compensation strategies of commutation error for sensorless BLDC motors are proposed in [18, 20–26]. The relationship between phase current waveform and the commutation error is analysed in [20, 21]. Then, a current index approach is proposed in [20], which uses the current waveform as an index for commutation error compensation. In [21], to compensate the commutation error, a current integral method based on forcing both of two 30° current integral values in one 60° conducting period to be equal is proposed. These two methods are effective and robust to variations in resistance and inductance. However, they need to conduct integral operation. Therefore, high-frequency sampling is required, which limits its implementation. In [22], a commutation error correction approach for coreless BLDC motors is proposed by analysing the relationships between no-load back EMF and the difference of inactive phase voltages. The commutation instant shift can be corrected in steady and variable speed conditions. However, it is not applicable for motor start-up stage due to the difficulty in detection of the back-EMF amplitude at low speed. Different from using phase voltage, the methods for compensating commutation error in [23] utilises the virtual neutral point. High reliable commutation signals replacing Hall signals can be achieved through the method. However, this method is proposed based on ironless stator motor, which neglects phase inductance. It

© The Institution of Engineering and Technology 2019

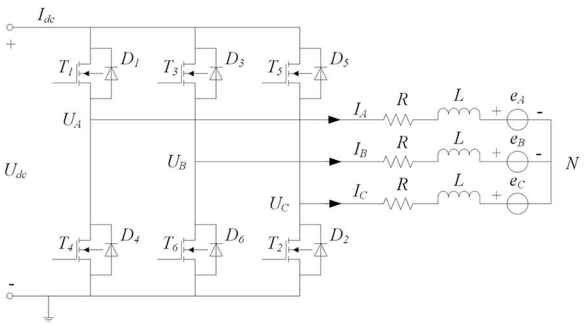

Fig. 1 *Equivalent circuit of BLDC drive system*

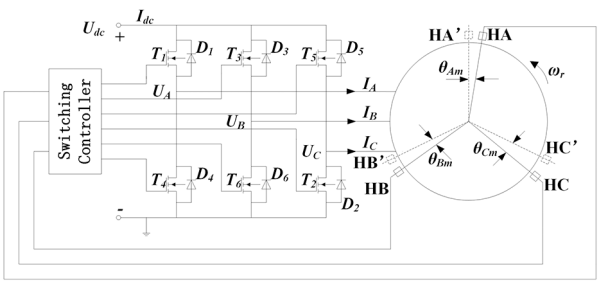

Fig. 2 *BLDC drive system with Hall sensors*

can limit the applications. On the other hand, a model-free adaptive control-based method for commutation error correction is proposed in [25], which is validated in high-speed operations. However, the complexity of the algorithm limits its applications. Authors in [26] propose a phase-delay compensation method based on Fourier series. The method improves the motor efficiency and torque, but it requires an extra designing inverter to realise the algorithm, which brings high cost to the control system.

All above approaches of dealing with commutation error are for sensorless control systems. Indeed, sensorless control is prevalent in recent years. However, there are some drawbacks with sensorless control, such as the detection of back EMF at low speed, which may significantly arouse limitations at start-up stage. Therefore, Hall sensors are still important and widely used in BLDC applications. However due to manufacturing technique, the Hall sensors may be misaligned or defective in many cases, which will bring about the commutation point error and further current ripples and torque ripples. Consequently, performance degradation and even system damage can be taken place. Hence, research of fault detection, identification, and related compensation methods for Hall sensor defection or installation error have been brought into focus [19, 27–32]. In [27], authors analyse the performance degradation of the BLDC while Hall sensor faults happened. In [28, 29], a fault-tolerant control (FTC) strategy for BLDC with errors of up to two Hall sensors is proposed. To identify the duration of fault diagnostic process (FDP), authors calculate and analyse the acceleration under fault conditions and employ a vector-tracking observer in [28] to determine the positions for the drive. Transient current and speed fluctuations can be eliminated. However, the algorithm is too complicated for implementation. In [30], based on the position error compensator, authors propose an input voltage- and current-based method to realise online advanced angle adjustment. This method can achieve balanced Hall signals and good operating performance. In [19], the influence of commutation error is analysed and a compensation of commutation error based on DC-link current difference is proposed. The compensation method is straightforward and effective. However, rather than giving a specific estimation of commutation error, the method utilises a weighted coefficient, which is not easy to be determined. In addition, the algorithm cannot realise fast convergence.

In this paper, a fast and low-cost estimated and compensated method of commutation error caused by misaligned Hall sensor for BLDC motors is proposed. The scientific contributions are listed as follows; First, commutation error caused by Hall sensor installation error is analysed and the detection method is investigated based on the differences of non-commutation phase current. Second, based on the analysis of the phase voltage, the phase current, and back-EMF variations during different periods, an easy and simple method to estimate commutation error is proposed. For delayed commutation, the commutation error can be easily obtained at actual commutation instant based on the phase current of this instant. For advanced commutation, the commutation error can be determined based on the variation time of the phase current. Therefore, different from the integral involved methods, the proposed strategy can compute the commutation error quickly without sampling at a high frequency. Furthermore, the proposed method takes the case diode of the inactive phase conducts into consideration under both ideal and non-ideal back EMF. In addition, a straightforward method to compensate the commutation error is proposed. Based on a half-period Hall signal and the estimated commutation error, the error can be compensated in the next half-period. It is effective and can converge rapidly. The proposed strategy is easy to implement without complicated software algorithms or additional hardware circuits. It is appropriate for low-cost applications, and its performance is verified through experimental results.

2 Analysis of Hall sensor installation error

The equivalent circuit of BLDC drive system is shown in Fig. 1, where R, L, N, $U_{\rm dc}$, and $U_{\rm dc}$ represent phase resistance, phase inductance, the neutral point of the motor, the DC-link voltage, and the DC-link current, respectively. U_k, I_k, and $\mathrm{e}_k(k = A, B, C)$ represent the phase voltage, the phase current, and the phase back EMF, respectively. With neglecting the iron and stray loss and assuming three-phase windings are symmetrical, the phase voltage equations of BLDC can be presented as

$$\begin{aligned} U_A &= \mathrm{R}I_A + L\frac{\mathrm{d}I_A}{\mathrm{d}t} + \mathrm{e}_A + U_N \\ U_B &= \mathrm{R}I_B + L\frac{\mathrm{d}I_B}{\mathrm{d}t} + \mathrm{e}_B + U_N \\ U_C &= \mathrm{R}I_C + L\frac{\mathrm{d}I_C}{\mathrm{d}t} + \mathrm{e}_C + U_N \end{aligned} \tag{1}$$

where U_N denotes the voltage of motor neutral point.

A typical type of BLDC drive system with Hall sensors is shown in Fig. 2. In the system, Hall sensors are responsible for providing position signals. Unfortunately, installation errors of Hall sensors can inevitably occur during the process of motor manufacturing. In Fig. 2, HA, HB, and HC represent the actual position of Hall sensors, HA′, HB′, and HC′ represent the ideal position of Hall sensors and $\theta_{\rm Am}$, $\theta_{\rm Bm}$, $\theta_{\rm Cm}$ are the mechanical angel errors. The electrical angel errors of Hall sensors can be represented as $\theta_x = p \cdot \theta_{\rm xm}$, where $x = A, B, C$ represent the three phases of BLDC and p denotes the number of pole pairs of the motor. It can be seen that a mechanical angle error may arouse a considerable electrical error, which can have an adverse impact on the performance of the system.

In the drive system, the switching controller decides the commutation instants according to the edges of the Hall signals, so the Hall sensors installation errors can result in commutation errors, arousing current, and torque ripples. The influence of commutation error is analysed in [19]. On the other hand, the ideal commutation instants can be determined by the intersections of phase back EMFs. Ideal phase back EMF, actual Hall signals (HA, HB, HC), ideal Hall signals (HA′, HB′, HC′), and their relationships are shown in Fig. 3.

3 Estimation of commutation error

In order to detect commutation error, the relationship between the differences of non-commutation phase current and commutation error is analysed first and then the estimation of commutation error under ideal back EMF and non-ideal back EMF are presented.

© The Institution of Engineering and Technology 2019

17518679, 2020, 3, Downloaded from https://ietresearch.onlinelibrary.wiley.com/doi/10.1049/iet-epa.2018.5941 by Luis Alvarez-Icaza - Universidad Nacional Autonoma De Mexico , Wiley Online Library on [01/12/2025]. See the Terms and Conditions (https://onlinelibrary.wiley.com/terms-and-conditions) on Wiley Online Library for rules of use; OA articles are governed by the applicable Creative Commons License

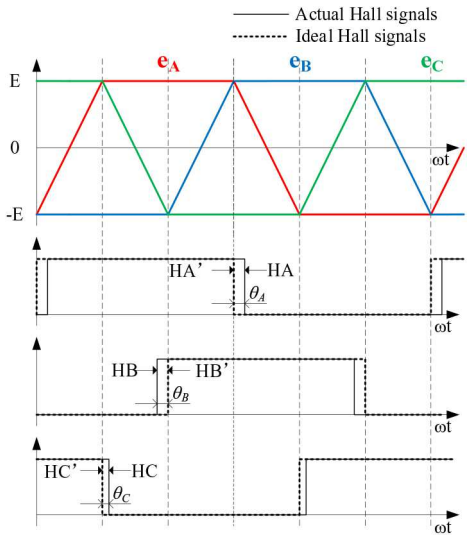

Fig. 3 *Hall signals and ideal back EMF of three phases*

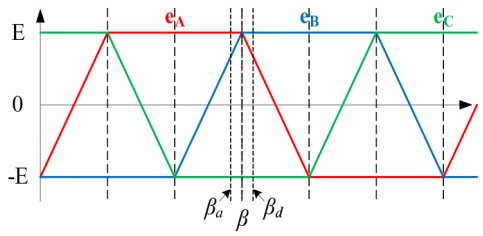

Fig. 4 *Ideal and non-ideal commutation points under ideal back EMF*

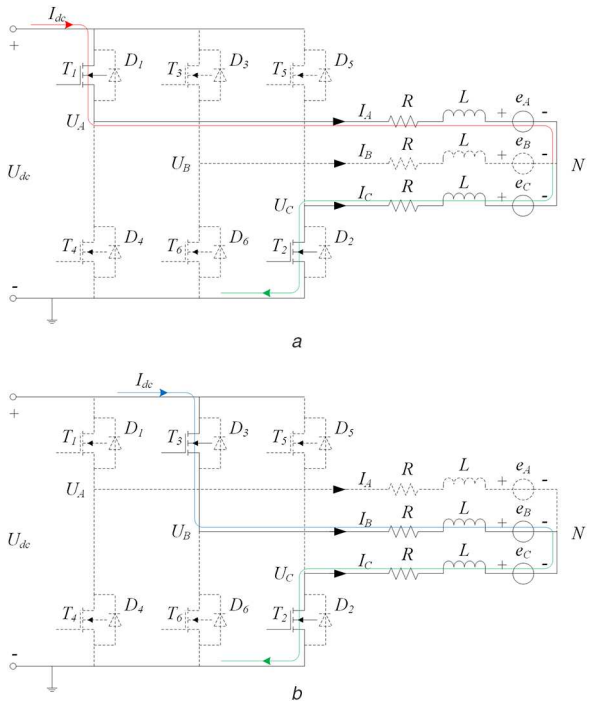

Fig. 5 *Current circuits before and after commutation without abnormal diode conducting in inactive phase*
(a) Before commutation, ***(b)*** After commutation

3.1 Detection of commutation error

Take current transferring from the upper bridge of phase A to that of phase B as an instance. In Fig. 4, β is the ideal commutation instant, β_a is the advanced commutation instant, β_d is the delayed commutation instant, e_A, e_B, and e_C are ideal phase back EMFs.

3.1.1 Differences of non-commutation phase current without abnormal diode conducting in inactive phase: Without considering the situation of the abnormal diode conducting in inactive phase before or after commutation, Phase A and phase C are conducting, while phase B is unexcited before commutation, Phase B and Phase C are conducting while Phase A is unexcited after commutation. Whether the commutation instant is ideal or not, the current circuits before and after commutation instants can be represented as Figs. 5*a* and *b*.

From Fig. 5*a*, it can be seen that $I_A = -I_C$ before commutation and the voltage equations before commutation can be expressed as

$$\begin{aligned} U_A(\omega t) &= I_A(\omega t)Z + e_A(\omega t) + U_N(\omega t) = DU_{dc} \\ U_C(\omega t) &= I_C(\omega t)Z + e_C(\omega t) + U_N(\omega t) = 0 \end{aligned} \tag{2}$$

where Z represents the impedance of the circuit and D is duty ratio. Thus, the current of non-commutation phase before commutation can be expressed as

$$I_{C1_bef}(\omega t) = \frac{e_A(\omega t) - e_C(\omega t) - DU_{dc}}{2Z} \tag{3}$$

Similarly, it can be seen from Fig. 5*b* that $I_B = -I_C$ is achieved after commutation and the current of non-commutation phase after commutation can be derived as

$$I_{C1_aft}(\omega t) = \frac{e_B(\omega t) - e_C(\omega t) - DU_{dc}}{2Z} \tag{4}$$

So, the difference value of non-commutation phase current after and before commutation instant can be expressed as

$$\Delta I_{C1}(\omega t) = I_{C1_aft}(\omega t) - I_{C1_bef}(\omega t) = \frac{e_B(\omega t) - e_A(\omega t)}{2Z} \tag{5}$$

Hence, it can be seen from Fig. 4 and (5) that the difference value of non-commutation phase current after and before commutation instant is zero only when the commutation occurs at the ideal instant β, namely $\Delta I_{C1}(\beta) = 0$, since the back EMF of phase A equals to that of phase B at this instant. Conversely, the difference value of non-commutation phase current is not equal to zero when commutation error exists. When the commutation is delayed and occurs at the instant β_d, the difference value of non-commutation phase current is >0, namely $\Delta I_{C1}(\beta_d) > 0$, while $\Delta I_{C1}(\beta_a) < 0$ is achieved when the advanced commutation occurs at the instant β_a because of the relationships between $e_B(\omega t)$ and $e_A(\omega t)$ at the instants β_d and β_a.

3.1.2 Differences of non-commutation phase current with abnormal diode conducting in inactive phase: Actually, large commutation error may cause abnormal diode conducting in inactive phase before or after commutation instant, which deserves further discussion. Take current transferring from the upper bridge of phase A to that of phase B as an instance, if delayed commutation occurs, the upper diode in phase B may conduct before commutation, the equivalent current circuit before commutation can be described as Fig. 6*a*. Conversely, advanced commutation may cause the abnormal upper diode conducting in phase A after commutation, the equivalent circuit is shown in Fig. 6*b*.

As shown in Fig. 6*a*, when commutation is delayed, the voltage equations before commutation are expressed as

$$\begin{aligned} U_A(\omega t) &= I_A(\omega t)Z + e_A(\omega t) + U_N(\omega t) = DU_{dc} \\ U_B(\omega t) &= I_B(\omega t)Z + e_B(\omega t) + U_N(\omega t) = DU_{dc} \\ U_C(\omega t) &= I_C(\omega t)Z + e_C(\omega t) + U_N(\omega t) = 0 \end{aligned} \tag{6}$$

Thus, when the commutation instant is β_d, the non-commutation phase current before commutation is

$$I_{C2_bef}(\beta_d) = \frac{e_A(\beta_d) + e_B(\beta_d) - 2e_C(\beta_d) - 2DU_{dc}}{3Z} \tag{7}$$

© The Institution of Engineering and Technology 2019

17518679, 2020, 3, Downloaded from https://ietresearch.onlinelibrary.wiley.com/doi/10.1049/iet-epa.2018.5941 by Luis Alvarez-Icaza - Universidad Nacional Autonoma De Mexico , Wiley Online Library on [01/12/2025]. See the Terms and Conditions (https://onlinelibrary.wiley.com/terms-and-conditions) on Wiley Online Library for rules of use; OA articles are governed by the applicable Creative Commons License

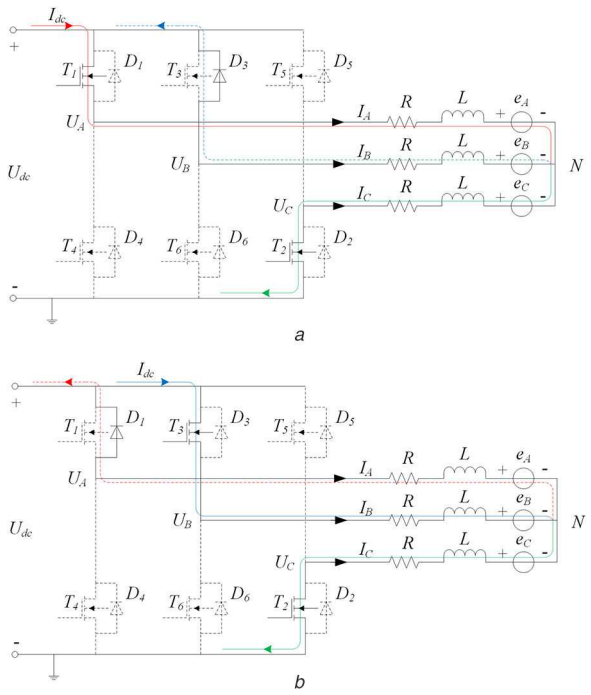

Fig. 6 *Current circuits before and after commutation with abnormal diode conducting in inactive phase*
(a) Before commutation, ***(b)*** After commutation

The current circuit after the delayed commutation instant β_d is the same as Fig. 5*b*, so the non-commutation phase current after commutation is as same as (4) and the difference value of non-commutation phase current after and before the commutation instant β_d can be expressed as

$$\begin{aligned}\Delta I_{C2}(\beta_d) &= I_{C1_\mathrm{aft}}(\beta_d) - I_{C2_\mathrm{bef}}(\beta_d)\\ &= \frac{\mathrm{DU_{dc}} - 2\mathrm{e}_A(\beta_d) + \mathrm{e}_B(\beta_d) + \mathrm{e}_C(\beta_d)}{6Z}\end{aligned} \tag{8}$$

It is reasonable to take $C_1 = [\mathrm{e}_B(\beta_d) - \mathrm{e}_A(\beta_d)]/3Z$ as a comparison object, which can be easily identified as a positive value. Then the difference between $\Delta I_{C2}(\beta_d)$ and C_1 can be deduced as

$$\Delta I_{C2}(\beta_d) - C_1 = \frac{\mathrm{DU_{dc}} - [\mathrm{e}_B(\beta_d) - \mathrm{e}_C(\beta_d)]}{6Z} \tag{9}$$

Since $\mathrm{DU_{dc}} > \max(|\mathrm{e}_{x1}| + |\mathrm{e}_{x2}|) > \mathrm{e}_B(\beta_d) - \mathrm{e}_C(\beta_d)$, $\Delta I_{C2}(\beta_d) - C_1 > 0$ is achieved and $\Delta I_{C2}(\beta_d) > 0$ can be deduced.

Correspondingly, when advanced commutation taken places at the instant β_a, it can be seen from Fig. 6*b* that the voltage equations after commutation is as same as (6) and the non-commutation phase current after commutation can be expressed as

$$I_{C2_\mathrm{aft}}(\beta_a) = \frac{\mathrm{e}_A(\beta_a) + \mathrm{e}_B(\beta_a) - 2\mathrm{e}_C(\beta_a) - 2\mathrm{DU_{dc}}}{3Z} \tag{10}$$

On the other hand, the current circuit before the advanced commutation instant β_a is the same as Fig. 5*a*, so the non-commutation phase current before commutation is as same as (3) and the difference value of non-commutation phase current after and before the commutation instant β_a can be expressed as

$$\begin{aligned}\Delta I_{C2}(\beta_a) &= I_{C2_\mathrm{aft}}(\beta_a) - I_{C1_\mathrm{bef}}(\beta_a)\\ &= \frac{-\mathrm{DU_{dc}} - \mathrm{e}_A(\beta_a) + 2\mathrm{e}_B(\beta_a) - \mathrm{e}_C(\beta_a)}{6Z}\end{aligned} \tag{11}$$

Similarly, take $C_2 = [\mathrm{e}_B(\beta_a) - \mathrm{e}_A(\beta_a)]/3Z$ as a comparison object, which is negative value, the difference between C_2 and $\Delta I_{C2}(\beta_a)$ can be deduced as

$$C_2 - \Delta I_{C2}(\beta_a) = \frac{\mathrm{DU_{dc}} - [\mathrm{e}_A(\beta_a) - \mathrm{e}_C(\beta_a)]}{6Z} \tag{12}$$

Since $\mathrm{DU_{dc}} > \max(|\mathrm{e}_{x1}| + |\mathrm{e}_{x2}|) > \mathrm{e}_A(\beta_a) - \mathrm{e}_C(\beta_a)$ is achieved, $\Delta I_{C2}(\beta_a) < 0$ can be deduced.

Generally, it can be concluded that no matter abnormal diode conducting occurs in inactive phase or not, the difference value of non-commutation phase current after and before commutation equals to zero only when commutation instant is ideal. If delayed commutation happens, the difference value of non-commutation phase current after and before commutation is greater than zero, and the difference value of non-commutation phase current after and before commutation is less than zero when commutation instant is advanced.

3.2 Estimation of commutation error for ideal back EMF

When delayed Hall sensor installation happens, the delayed commutation can lead to the current increment of the turn-off phase during the delayed period. Thus, the current of the turn-off phase at the actual commutation instant can be utilised to estimate the commutation angle error. Conversely, when advanced Hall sensor installation occurs, the time of the turn-off phase current decreasing from the stable value to zero can be detected to estimate the advanced commutation error.

3.2.1 Commutation error without abnormal diode conducting in inactive phase: Likewise, take current transferring from the upper bridge of phase A to that of phase B as an instance, when delayed commutation takes place, the phase currents and Hall signal HA are shown in Fig. 7*a*. It can be noticed in Fig. 7*a* that $t = 0$ denotes the ideal commutation instant while $t = t_d$ denotes the actual commutation instant, t_d denotes the delayed commutation time, so what need to be obtained is the delayed commutation angle $\omega \mathrm{t}_d$. During the delayed period $0 \sim t_d$, without considering the abnormal diode conducting in inactive phase, the voltage equations can be expressed as (2). From Fig. 3 it can be seen that the phase back EMFs during the period $0 \sim t_d$ can be expressed as

$$\begin{aligned}&\mathrm{e}_C = -\mathrm{e}_B = -E\\ &\mathrm{e}_A = E - \frac{6E}{\pi}\omega \mathrm{t} \quad (0 < t < t_d)\end{aligned} \tag{13}$$

where E represents the flat top value of back EMF.

Since resistance makes little difference to BLDC motor, the value of the resistance can be ignored to simplify the calculation. Under this circumstance, from (2) and (13) the current in turn-off phase A during the period $0 \sim t_d$ can be expressed as

$$I_{A1}(t) = I_0 + \frac{\mathrm{DU}_d - 2E}{2L}t + \frac{3\mathrm{E}\omega \mathrm{t}^2}{2\pi \mathrm{L}} \tag{14}$$

where I_0 represents the stable phase current value of the motor. So, the current of phase A at the instant t_d can be expressed as

$$I_{A1}(t_d) = I_0 + \frac{\mathrm{DU}_d - 2E}{2L}t_d + \frac{3\mathrm{E}\omega \mathrm{t}_d^2}{2\pi \mathrm{L}} \tag{15}$$

Thus, the delayed commutation angle can be deduced as

$$\omega \mathrm{t}_d = \frac{\pi(2E - \mathrm{DU_{dc}}) \pm \sqrt{\pi^2(\mathrm{DU_{dc}} - 2E)^2 - 24\pi\omega \mathrm{EL}(I_0 - I_{A1}(t_d))}}{6E} \tag{16}$$

© The Institution of Engineering and Technology 2019

17518679, 2020, 3, Downloaded from https://ietresearch.onlinelibrary.wiley.com/doi/10.1049/iet-epa.2018.5941 by Luis Alvarez-Icaza - Universidad Nacional Autonoma De Mexico , Wiley Online Library on [01/12/2025]. See the Terms and Conditions (https://onlinelibrary.wiley.com/terms-and-conditions) on Wiley Online Library for rules of use; OA articles are governed by the applicable Creative Commons License

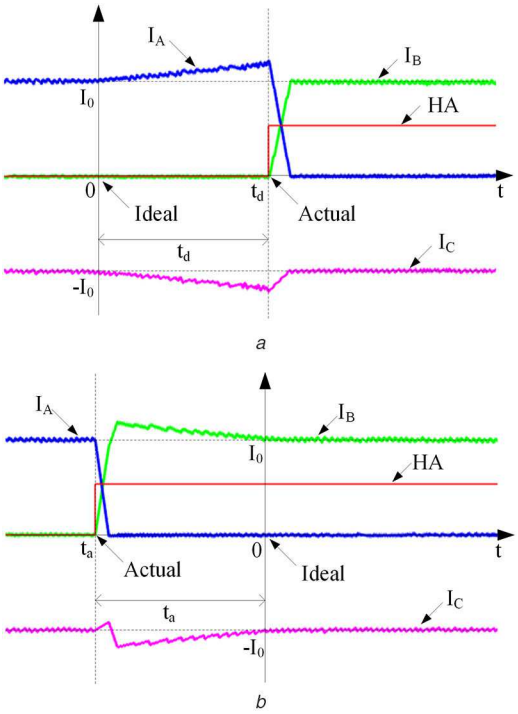

Fig. 7 *Phase currents and Hall signal under commutation error*
(a) Delayed commutation, ***(b)*** Advanced commutation

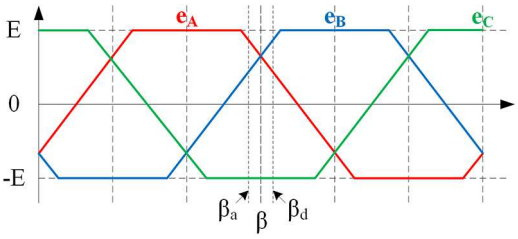

Fig. 8 *Ideal and non-ideal commutation points under non-ideal back EMF*

In (16), it is easy to learn that E, $\mathrm{DU_{dc}}$, ω, L, and I_0 are known values before calculation. Hence, when delayed commutation occurs, only the detection of the current in turn-off phase A at the actual commutation instant t_d is required to estimate the delayed commutation angle.

Conversely, when advanced commutation happens, the Hall signal HA is shown in Fig. 7*b*. In Fig. 7*b*, $t = 0$ denotes the actual commutation instant, $t = t_a$ denotes the ideal commutation instant, t_a, a negative value, denotes the advanced commutation time and $\omega \mathrm{t}_a$ is the advanced commutation angle, which need to be estimated. At the instant $t = 0$, commutation starts to happen, so during the commutation period, the voltage equations can be expressed as

$$\begin{aligned} U_A(\omega \mathrm{t}) &= I_A(\omega \mathrm{t})Z + \mathrm{e}_A(\omega \mathrm{t}) + U_N(\omega \mathrm{t}) = 0 \\ U_B(\omega \mathrm{t}) &= I_B(\omega \mathrm{t})Z + \mathrm{e}_B(\omega \mathrm{t}) + U_N(\omega \mathrm{t}) = \mathrm{DU_{dc}} \\ U_C(\omega \mathrm{t}) &= I_C(\omega \mathrm{t})Z + \mathrm{e}_C(\omega \mathrm{t}) + U_N(\omega \mathrm{t}) = 0 \end{aligned} \tag{17}$$

Due to the fact that the commutation interval is greatly short, the variation of the phase back EMFs during the commutation interval is negligible, so the phase back EMFs during the commutation period can be expressed as

$$\begin{aligned} \mathrm{e}_A &= -\mathrm{e}_C = E \\ \mathrm{e}_B &= E - \frac{6E}{\pi}\omega \mathrm{t}_a \end{aligned} \tag{18}$$

According to (17) and (18), neglecting the resistances, the current of the turn-off phase A during the commutation period can be derived as

$$I_{A2}(t) = I_0 - \left(\frac{\mathrm{DU_{dc}} + 2E}{3L} + \frac{2\mathrm{E}\omega \mathrm{t}_a}{\pi \mathrm{L}}\right)t \tag{19}$$

So, the time of the current in phase A decreasing to zero can be written as

$$t_{A0} = \frac{3\pi \mathrm{I}_0 L}{(\mathrm{DU_{dc}} + 2E)\pi + 6\mathrm{E}\omega \mathrm{t}_a} \tag{20}$$

Thus, the advanced commutation angle is given by

$$\omega \mathrm{t}_a = \frac{\pi \mathrm{I}_0 L}{2\mathrm{E}\mathrm{t}_{A0}} - \frac{\pi(\mathrm{DU_{dc}} + 2E)}{6E} \tag{21}$$

To calculate the advanced commutation angle, it can be noticed from (21) that only measuring the time of the current in the turn-off phase lasting to zero during the commutation period is needed.

3.2.2 Commutation error with abnormal diode conducting in inactive phase: On the other hand, when the abnormal diode conducting in inactive phase aroused by delayed commutation takes place, the upper diode in phase B conducts before commutation. Hence, during the delayed period $0 \sim t_d$ in Fig. 7*a*, the voltage equations can be represented as (6) and the phase back EMFs are as same as (13). In this case, the current of the turn-off phase A at t_d and the delayed commutation angle can be expressed as

$$I_{A1}(t_d) = I_0 + \frac{\mathrm{DU_{dc}} - 2E}{3L}t_d + \frac{2\mathrm{E}\omega \mathrm{t}_d^2}{\pi \mathrm{L}} \tag{22}$$

$$\omega \mathrm{t}_d = \frac{\pi(2E - \mathrm{DU_{dc}}) \pm \sqrt{\pi^2(\mathrm{DU_{dc}} - 2E)^2 - 72\pi\omega \mathrm{EL}(I_0 - I_{A1}(t_d))}}{12E} \tag{23}$$

respectively, which are obtained from (6) and (13) ignoring the phase resistance.

Conversely, when commutation is advanced, the calculation of the advanced commutation angle is based on the time of turn-off phase decreasing to zero during the commutation interval, so the abnormal diode conducting in inactive phase caused by advanced commutation after the commutation instant makes no difference to the estimation of the advanced commutation angle, so the result is (21).

3.3 Estimation of commutation error for non-ideal back EMF

The ideal back EMF of BLDC motor is assumed as trapezoidal waveform with 120° flat-top width. However, due the effect of the armature reaction, rotor magnetic structure and saturated magnetic field, it is difficult to achieve the ideal back-EMF waveform. Basically, the actual waveform of back EMF is somewhere in between trapezoidal waveform and sinusoidal waveform, which can be reasonably considered as trapezoidal waveform with flat-top less than 120° width [21]. Fig. 8 shows the non-ideal phase back EMFs with 90° width flat-tops. β is the ideal commutation instant when the current transferring from the phases AC to BC, while β_a and β_d are the advanced and delayed commutation instants, respectively.

3.3.1 Commutation error without abnormal diode conducting in inactive phase: Similar with the situation of ideal back EMF, in case delayed commutation occurs, the voltage equations during the period $0 \sim t_d$ in Fig. 7*a* are the same as (2) without considering the abnormal diode conducting in inactive phase. Furthermore, it is rational to assume that the commutation error angle is less than

© The Institution of Engineering and Technology 2019

17518679, 2020, 3, Downloaded from https://ietresearch.onlinelibrary.wiley.com/doi/10.1049/iet-epa.2018.5941 by Luis Alvarez-Icaza - Universidad Nacional Autonoma De Mexico , Wiley Online Library on [01/12/2025]. See the Terms and Conditions (https://onlinelibrary.wiley.com/terms-and-conditions) on Wiley Online Library for rules of use; OA articles are governed by the applicable Creative Commons License

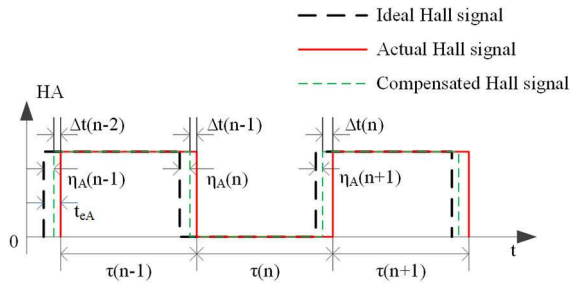

Fig. 9 *Ideal, actual and compensated Hall signals*

$\pi/12$, which is represented in Fig. 8, simply because the commutation error will be continually compensated and will eventually satisfy the assumption. Thus, the phase back EMFs during the delayed commutation period $0 \sim t_d$ can be expressed as

$$\begin{aligned} e_A &= E - \frac{6E}{\pi + 6 \times (\pi/12)}\left(\omega t + \frac{\pi}{12}\right) \\ e_B &= E - \frac{6E}{\pi + 6 \times (\pi/12)}\left(\frac{\pi}{12} - \omega t\right) \quad (0 < t < t_d) \\ e_C &= -E \end{aligned} \tag{24}$$

From (2) and (24), ignoring the phase resistance, the current of the turn-off phase A at t_d and the delayed commutation angle can be derived as

$$I_{A1}(t_d) = I_0 + \frac{3DU_{dc} - 5E}{6L} t_d + \frac{E\omega t_d^2}{\pi L} \tag{25}$$

$$\omega t_d = \frac{\pi(5E - 3DU_d) \pm \sqrt{\pi^2(3DU_{dc} - 5E)^2 - 144\pi\omega EL(I_0 - I_{A1}(t_d))}}{12E} \tag{26}$$

respectively.

Accordingly, when advanced commutation takes place, the voltage equations during the commutation period are as same as (17) and the phase back EMFs during the commutation period can be expressed as

$$\begin{aligned} e_A &= E - \frac{6E}{\pi + 6 \times (\pi/12)} \times \left(\frac{\pi}{12} - \omega t_a\right) \\ e_B &= E - \frac{6E}{\pi + 6 \times (\pi/12)} \times \left(\frac{\pi}{12} + \omega t_a\right) \\ e_C &= -E \end{aligned} \tag{27}$$

which can be seen from Fig. 8.

Similar with the calculation of the advanced error angle under ideal back EMF, the time of turn-off phase A decreasing to zero and the advanced commutation angle thus can be expressed as

$$t_{A0} = \frac{9\pi I_0 L}{(3DU_{dc} + 5E)\pi + 36E\omega t_a} \tag{28}$$

$$\omega t_a = \frac{\pi I_0 L}{4Et_{A0}} - \frac{\pi(3DU_{dc} + 5E)}{36E} \tag{29}$$

respectively.

3.3.2 Commutation error with abnormal diode conducting in inactive phase: For the case of abnormal diode conducting in inactive phase, only the calculation of the delayed error angle is different. During the delayed period $0 \sim t_d$ in Fig. 7*a*, the voltage equations and the phase back EMFs can be written as (6) and (27), respectively, which can yield the current of the turn-off phase A at t_d and the delayed commutation angle as follow:

$$I_{A1}(t_d) = I_0 + \frac{3DU_{dc} - 5E}{9L} t_d + \frac{2E\omega t_d^2}{\pi L} \tag{30}$$

$$\omega t_d = \frac{\pi(5E - 3DU_{dc}) \pm \sqrt{\pi^2(3DU_{dc} - 5E)^2 - 648\pi\omega EL(I_0 - I_{A1}(t_d))}}{36E} \tag{31}$$

Thus, the estimated electrical angle error of the Hall sensor HA can be expressed as

$$\theta'_A = \begin{cases} p \cdot \omega t_d, & \text{when commutation is delayed} \\ p \cdot \omega t_a, & \text{when commutation is advanced} \end{cases} \tag{32}$$

It should be noticed that when commutation is delayed, θ'_A is positive. Conversely, θ'_A is negative when commutation is advanced. In general, commutation error can be easily estimated by the proposed method. When delayed commutation happens, only the detection of the turn-off phase current at the actual commutation instant is required to calculate the delayed commutation error angle, while the time of the turn-off phase decreasing from stable value to zero after the beginning of the actual commutation instant is sufficient to calculate the advanced commutation error angle in case advanced commutation occurs.

4 Compensation of commutation error

Taking the Hall signal HA as an example, according to the analysis above, the estimated commutation time error can be expressed as

$$t'_{es} = \frac{\theta'_A}{p \cdot \omega'} \tag{33}$$

where ω' represents the angular velocity of BLDC at the compensation instant of commutation error.

On the basis of the estimated commutation time error, the actual Hall signals can be compensated to generate exact commutation signals. Fig. 9 shows the compensation process.

In Fig. 9, the interval between the ideal Hall signal and the actual Hall signal is the exact commutation time error t_{eA}, which is a constant value and needs to be compensated. In practice, however, the estimated commutation time error cannot be precisely equivalent with the exact commutation error, so the commutation error is required to be estimated and compensated every Hall signal half-period. It is shown in Fig. 9 that $\Delta t(n-1)$ is the '$(n-1)$th' compensated interval to the exact commutation time error. Based on $\Delta t(n-1)$, the exact commutation time error turns to be $\eta_A(n)$. However, the estimated commutation time error, which can be expressed as $t'_{es}(n)$, may be different from $\eta_A(n)$, because of calculation errors. Therefore, the next compensation time interval can be deduced as $\Delta t(n) = \Delta t(n-1) + t'_{es}(n)$.

$\tau(n-1)$ is the '$(n-1)$th' time interval of the actual Hall signal half-period, it can be seen as equivalent with the next Hall signal half-period when BLDC operating in steady state. Hence, the 'nth' compensation can be implemented based on the difference between the '$(n-1)$th' time interval of the actual Hall signal half-period and the 'nth' compensated time interval, which is written as $\tau(n-1) - \Delta t(n)$. Analogously, utilising this strategy every Hall signal half-period, the commutation error can be compensated online and restricted to an ideal range.

It should be noticed that the electrical angle error of Hall sensor θ'_A is a constant value for a certain motor, which can be computed during steady state. When the BLDC motor operates in transient state, such as speed variations, θ'_A should be calculated a priori using the proposed method during steady state. Meanwhile, some filters, such as the extrapolating filter of [33] can be used to estimate the rotor speed and the next half-period of Hall signal. Then, the commutation time error can be obtained by (33) and compensated during transient process [19].

© The Institution of Engineering and Technology 2019

17518679, 2020, 3, Downloaded from https://ietresearch.onlinelibrary.wiley.com/doi/10.1049/iet-epa.2018.5941 by Luis Alvarez-Icaza - Universidad Nacional Autonoma De Mexico , Wiley Online Library on [01/12/2025]. See the Terms and Conditions (https://onlinelibrary.wiley.com/terms-and-conditions) on Wiley Online Library for rules of use; OA articles are governed by the applicable Creative Commons License

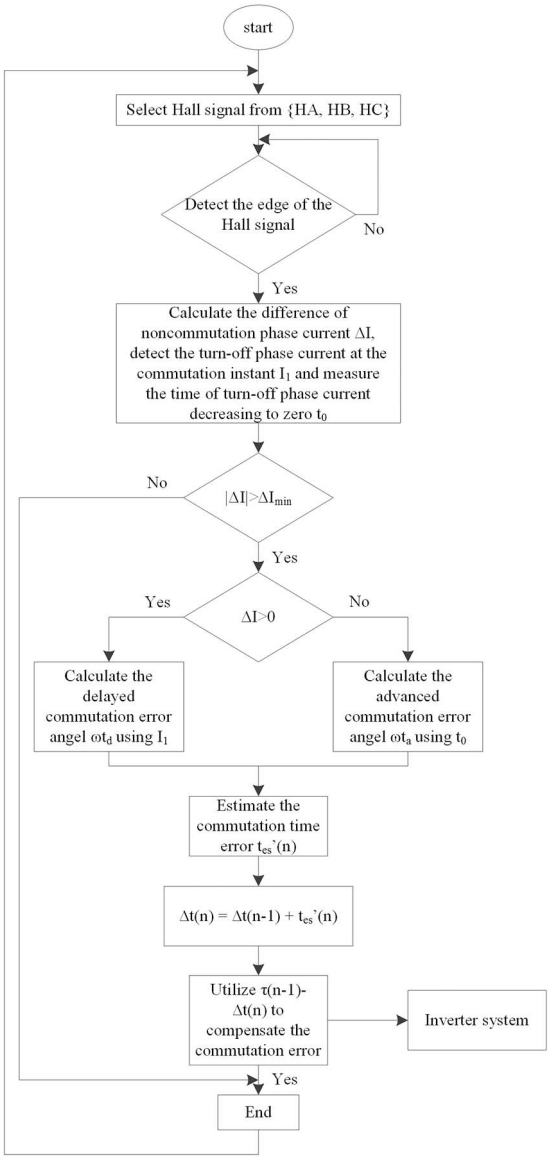

Fig. 10 *Flowchart of the estimating and compensating strategy for commutation error*

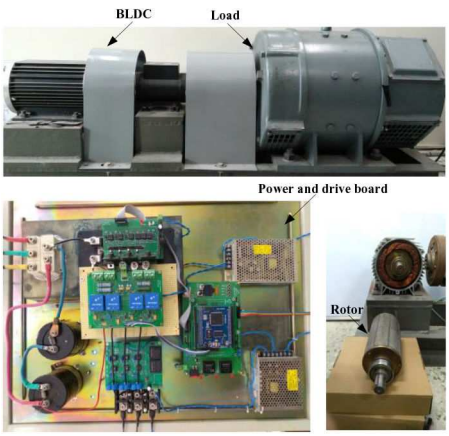

Fig. 11 *Experimental setup*

A flowchart of the proposed estimating and compensating strategy for commutation error is shown in Fig. 10. It can be learnt from the analysis in Section 1, part 2 that the commutation error is proportional to the difference value of non-commutation phase current after and before commutation. Meanwhile, a slight difference value may be caused by measuring error, which hardly influences the precision of the calculation and can be ignored. Therefore, to reduce the computation burden, it can be noted in

Table 1 Motor parameters

Motor parameter	Value	Unit
rated voltage	300	V
rated power	2.5	KW
rated speed	1500	r/min
rated torque	20	N·m
pole pairs	4	—
phase inductance	1.234	mH
phase resistance	0.0246	Ω
back-EMF coefficient	0.528	V/(rad/s)

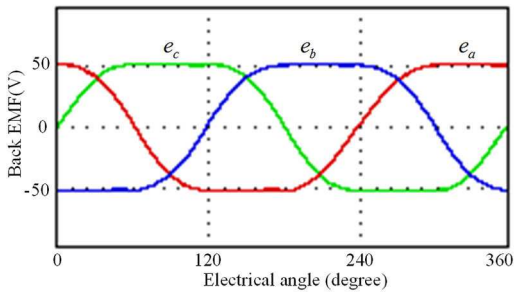

Fig. 12 *Waveform of phase back EMF*

Fig. 10 that ΔI_{min} is a threshold value to enable the estimation and compensation of commutation error, which can be set as the time interval of 2 electrical degrees. Only when the absolute value of the difference of non-commutation phase current after and before commutation is $>\Delta I_{min}$, the commutation error is deserved to be estimated and compensated.

5 Experimental results

To verify the effectiveness of the proposed method, experiments have been performed using the experimental setup shown in Fig. 11 and the parameters of the BLDC in this study are listed in Table 1. It can be seen that the value of the phase resistance is small, which only marginally affects the control system, it can, therefore, be neglected.

The back-EMF flat-top width of the BLDC employed in the experiments is identified as 90° equivalently, which is shown in Fig. 12, so the estimation of commutation errors is performed under non-ideal back EMF.

Experiments have been performed at 800, 1500, and 500 rpm with 10, 20 N·m load torque, respectively. Meanwhile, the proposed commutation error estimation and compensation strategy is verified under delayed and advanced commutation caused by Hall sensor installation error, respectively. Fig. 13*a* shows relationship among Hall signal, commutation instant and the phase currents of BLDC with non-ideal back EMF under delayed commutation at 800 rpm with 10 N·m load torque, the commutation error is set to be 10 electrical degrees. Fig. 14*a* shows the relationship under delayed commutation at 800 rpm with 20 N·m load torque. It can be seen that the phase current curls up at the actual commutation instant due to delayed commutation. The relationships under 10° advanced commutation with 10 and 20 N·m load torque are, respectively, shown in Figs. 13*b* and 14*b*. Similarly, the advanced commutation arouses distorted phase current. It should be noticed in Figs. 13*a*, 13*b*, 14*a* and 14*b* that the diode in inactive phase does not conduct, so the commutation error can be estimated without considering abnormal diode conducting in inactive phase. Figs. 13*c* and 14*c* show the relationships between Hall signal and phase current after commutation error compensation. It can be seen that the phase current fluctuations are decreased.

Figs. 15 and 16 show the waveforms of phase current under commutation error and the implementation of the proposed compensation method at 1500 rpm, the commutation error is set to be 18 electrical degrees. The relationships among Hall signal, commutation instant and the phase current under delayed

© The Institution of Engineering and Technology 2019

17518679, 2020, 3, Downloaded from https://ietresearch.onlinelibrary.wiley.com/doi/10.1049/iet-epa.2018.5941 by Luis Alvarez-Icaza - Universidad Nacional Autonoma De Mexico , Wiley Online Library on [01/12/2025]. See the Terms and Conditions (https://onlinelibrary.wiley.com/terms-and-conditions) on Wiley Online Library for rules of use; OA articles are governed by the applicable Creative Commons License

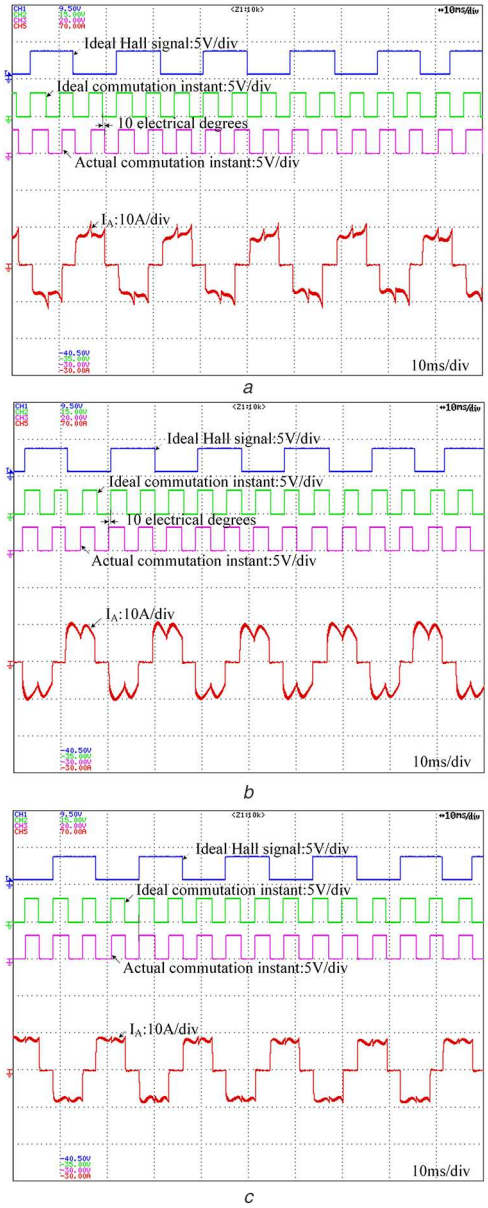

Fig. 13 *Relationships among ideal Hall signal, ideal commutation signal, actual commutation signal and phase current under 10° commutation errors and after compensation with 10 N·m loads at 800 r/min*
(a) Delayed commutation, ***(b)*** Advanced commutation, ***(c)*** After compensation

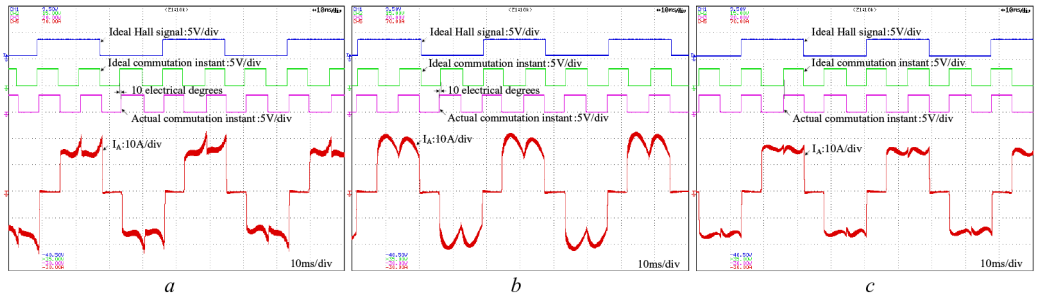

Fig. 14 *Relationships among ideal Hall signal, ideal commutation signal, actual commutation signal and phase current under 10° commutation errors and after compensation with 20 N·m loads at 800 r/min*
(a) Delayed commutation, ***(b)*** Advanced commutation, ***(c)*** After compensation

commutation with 10 and 20 N·m load torque are, respectively, shown in Figs. 15*a* and 16*a*. Since the commutation is seriously delayed, the abnormal diode conducting in inactive phase occurs, which deteriorates the phase current fluctuation as marked in the circles. Figs. 15*b* and 16*b* show the relationships under advanced commutation. Also, the diode conducting in inactive phase aroused by large advanced commutation intensifies the phase current distortion. Meanwhile, it can be observed in Figs. 15*a*, 15*b*, 16*a*, and 16*b* that the waveform fluctuations are larger than the case at 800 rpm, since the commutation error angle is larger than that case. Due to the abnormal diode conducting in inactive phase, the estimation of the commutation error should be conducted with considering this situation. The relationships among Hall signal, commutation instant, and phase current after the implementation of the proposed compensation method are shown in Figs. 15*c* and 16*c*. Obviously, the fluctuations of the phase current are

© The Institution of Engineering and Technology 2019

17518679, 2020, 3, Downloaded from https://ietresearch.onlinelibrary.wiley.com/doi/10.1049/iet-epa.2018.5941 by Luis Alvarez-Icaza - Universidad Nacional Autonoma De Mexico , Wiley Online Library on [01/12/2025]. See the Terms and Conditions (https://onlinelibrary.wiley.com/terms-and-conditions) on Wiley Online Library for rules of use; OA articles are governed by the applicable Creative Commons License

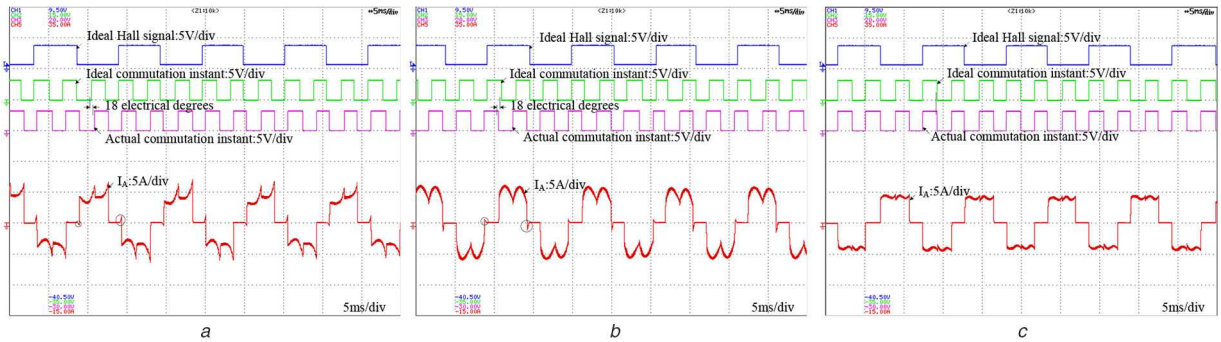

Fig. 15 *Relationships among ideal Hall signal, ideal commutation signal, actual commutation signal and phase current under 18° commutation errors and after compensation with 10 N·m at 1500 r/min*
(a) Delayed commutation, ***(b)*** Advanced commutation, ***(c)*** After compensation

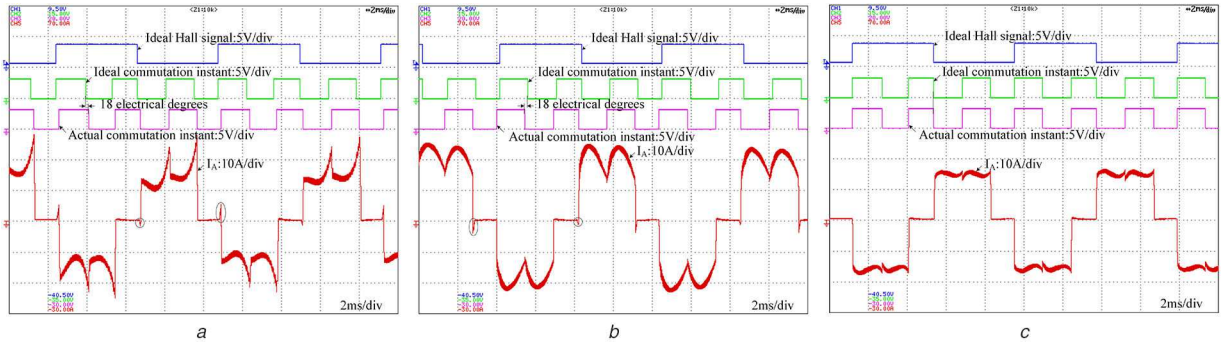

Fig. 16 *Relationships among ideal Hall signal, ideal commutation signal, actual commutation signal and phase current under 18° commutation errors and after compensation with 20 N·m loads at 1500 r/min*
(a) Delayed commutation, ***(b)*** Advanced commutation, ***(c)*** After compensation

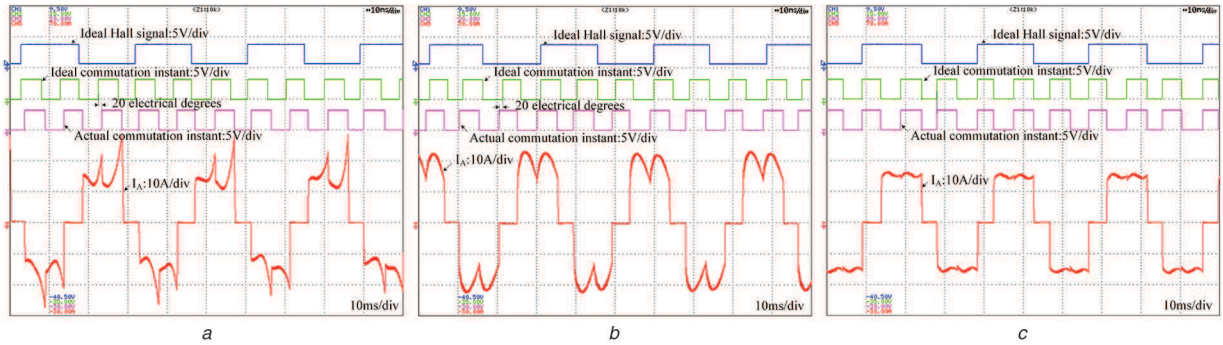

Fig. 17 *Relationships among ideal Hall signal, ideal commutation signal, actual commutation signal and phase current under 20° commutation errors and after compensation with 20 N·m loads at 500 r/min*
(a) Delayed commutation, ***(b)*** Advanced commutation, ***(c)*** After compensation

remarkably decreased and the phenomenon that abnormal diode conducts in inactive phase is disappeared.

To show the performance of low speed region, the results when the motor operating at 500 rpm are shown in Fig. 17. It can be easily seen that the phase current ripples caused by delayed and advanced commutations are reduced, though the commutation error angle is 20°.

In order to verify the good dynamic performance of the proposed method, the transient processes before and after compensation for commutation errors are captured. Fig. 18*a* shows the relationship among Hall signal, commutation instant and the phase current under delayed commutation and after error compensation at 800 rpm. Fig. 18*b* shows the relationship under advanced commutation and after error compensation. Fig. 19 shows the phase current waveform and commutation error under delayed commutation and after error compensation, the delayed commutation error is 10 electrical degrees. It is easy to learn that after the implementation of the proposed compensation method, the commutation error is practically eliminated and the distortions of the phase current are immediately relieved.

To verify the dynamic performance of the proposed method when load changing, the test that load suddenly increases from 10 to 16 N·m has been conducted. Fig. 20 shows the waveforms of the phase current and commutation error with sudden load change. It can be seen that the motor does not affected by the load change and even runs after that, which can validate the good performance of the proposed method for an instantaneous load condition.

Fig. 21 shows the motor proficiency and the power factor before and after the compensation for commutation error, the speed range is 500–1500 rpm. It can be seen that the motor proficiency and the power factor achieve considerable improvement after compensation, since the proposed method can make a positive difference to reducing torque ripple of the BLDC motor.

6 Conclusion

In this paper, a simple and easy method to estimate and compensate the commutation error caused by misplaced Hall sensors on BLDC motors is proposed. Based on the relationship between the commutation error and the differences of non-commutation phase current before and after commutation, the state of commutation

© The Institution of Engineering and Technology 2019

17518679, 2020, 3, Downloaded from https://ietresearch.onlinelibrary.wiley.com/doi/10.1049/iet-epa.2018.5941 by Luis Alvarez-Icaza - Universidad Nacional Autonoma De Mexico , Wiley Online Library on [01/12/2025]. See the Terms and Conditions (https://onlinelibrary.wiley.com/terms-and-conditions) on Wiley Online Library for rules of use; OA articles are governed by the applicable Creative Commons License

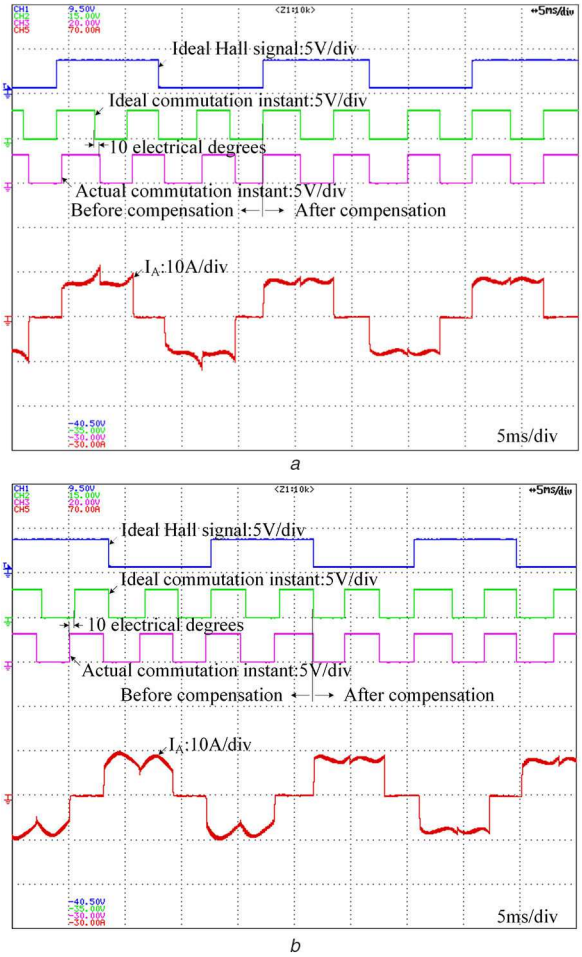

Fig. 18 *Relationships among ideal Hall signal, ideal commutation signal, actual commutation signal and phase current during transient compensating processes*

(a) From delayed commutation to ideal commutation after compensation, ***(b)*** From advanced commutation to ideal commutation after compensation

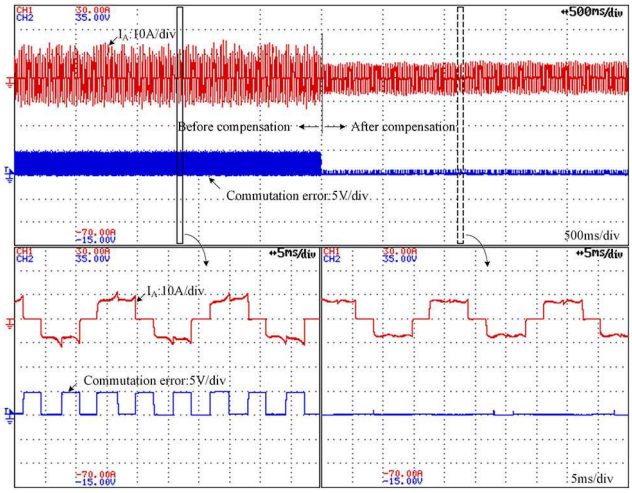

Fig. 19 *Phase current waveform and commutation error during dynamic process from delayed commutation to ideal commutation after compensation*

error is identified. When commutation is delayed, only the value of turn-off phase current at the actual commutation instant is required to estimate the commutation error, while only the time that turn-off phase current decreasing to zero need to be measured when advanced commutation occurs. Meanwhile, commutation error under non-ideal back EMF and the circumstance that diode conducting in inactive phase have been analysed. According to the estimated commutation error and previous half-period Hall signal, the commutation error can be compensated. The experiments show that the proposed method can perform in different speeds with different loads, and it can eliminate the abnormal diode conducting in inactive phase aroused by large commutation error. In addition, it has good dynamic performance even under the load-variation condition. Furthermore, the proficiency and power factor have been improved, which can result in better motor performance. On the other hand, although the resistance is omitted in the proposed estimating strategy, it is still highly parameter depending. However, the parameter variation, such as inductance, and system noise can naturally occur. They can affect the precise of the proposed strategy. Moreover, the delay caused by the drive system, such as filter, may result in the degradation of accuracy when detecting the commutation error. Thus, the negative aspects should be further investigated

© The Institution of Engineering and Technology 2019

17518679, 2020, 3, Downloaded from https://ietresearch.onlinelibrary.wiley.com/doi/10.1049/iet-epa.2018.5941 by Luis Alvarez-Icaza - Universidad Nacional Autonoma De Mexico , Wiley Online Library on [01/12/2025]. See the Terms and Conditions (https://onlinelibrary.wiley.com/terms-and-conditions) on Wiley Online Library for rules of use; OA articles are governed by the applicable Creative Commons License

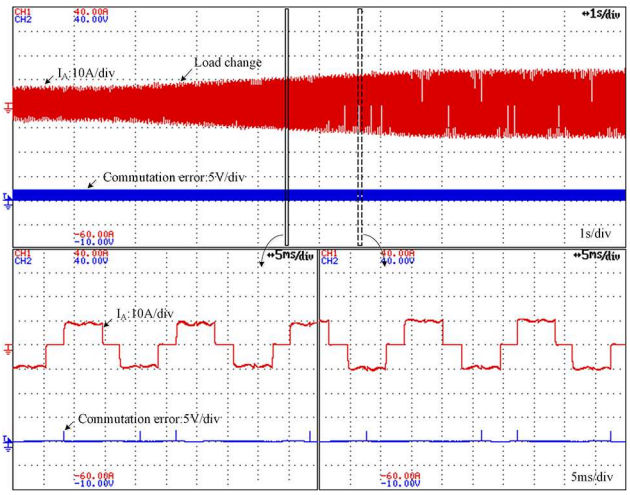

Fig. 20 *Waveforms of phase current and commutation error during loading change from 10 to 16 N·m*

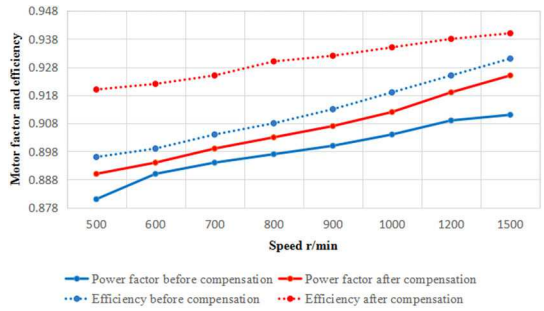

Fig. 21 *Motor power factor and efficiency before and after compensation for commutation error*

7 References

[1] Wang, S., Lee, A.-C.: 'A 12-step sensorless drive for brushless DC motors based on back-Emf differences', *IEEE Trans. Energy Convers.*, 2015, **30**, (2), pp. 646–654

[2] Cui, C., Liu, G., Wang, K.: 'A novel drive method for high-speed brushless DC motor operating in a wide range', *IEEE Trans. Power Electron.*, 2015, **30**, (9), pp. 4998–5008

[3] Tsotoulidis, S., Safacas, A.N.: 'Deployment of an adaptable sensorless commutation technique on Bldc motor drives exploiting zero sequence voltage', *IEEE Trans. Ind. Electron.*, 2015, **62**, (2), pp. 877–886

[4] Dunkl, S., Muetze, A., Schoener, G.: 'Design constraints of small single-phase permanent magnet brushless Dc drives for fan applications', *IEEE Trans. Ind. Appl.*, 2015, **51**, (4), pp. 3178–3186

[5] Jung, S.-Y., Kim, Y.-J., Jae, J., *et al.*: 'Commutation control for the low-commutation torque ripple in the position sensorless drive of the low-voltage brushless DC motor', *IEEE Trans. Power Electron.*, 2014, **29**, (11), pp. 5983–5994

[6] Cui, C., Liu, G., Wang, K., *et al.*: 'Sensorless drive for high-speed brushless DC motor based on the virtual neutral voltage', *IEEE Trans. Power Electron.*, 2015, **30**, (6), pp. 3275–3285

[7] Damodharan, P., Vasudevan, K.: 'Sensorless brushless DC motor drive based on the zero-crossing detection of back electromotive force (Emf) from the line voltage difference', *IEEE Trans. Energy Convers.*, 2010, **25**, (3), pp. 661–668

[8] Lin, C.T., Hung, C.W., Liu, C.W.: 'Sensorless control for four-switch three-phase brushless DC motor drives'. IEEE Ind. Applic. Soc., Tampa, USA, December 2006, pp. 2048–2053

[9] Johnson, P.M., Bai, K., Ding, X.F.: 'Back-Emf-based sensorless control using the Hijacker algorithm for full speed range of the motor drive in electrified automobile systems', *IEEE Trans. Transp. Electrific.*, 2015, **1**, (2), pp. 126–137

[10] Kim, J.-H., Lim, J., Kim, S.-K.: 'Commutation point estimation for sensorless brushless DC motor using back-electromagnetic force change rate by least-square method', *Electron. Lett.*, 2015, **51**, (1), pp. 31–33

[11] Shen, J.X., Iwasaki, S.: 'Sensorless control of ultrahigh-speed Pm brushless motor using Pll and third harmonic back Emf', *IEEE Trans. Ind. Electron.*, 2006, **53**, (2), pp. 421–428

[12] Liu, J.M., Zhu, Z.Q.: 'Improved sensorless control of permanent-magnet synchronous machine based on third-harmonic back Emf', *IEEE Trans. Ind. Appl.*, 2014, **50**, (3), pp. 1861–1870

[13] Shen, J.X., Zhu, Z.Q., Howe, D.: 'Sensorless flux-weakening control of permanent-magnet brushless machines using third harmonic back Emf', *IEEE Trans. Ind. Appl.*, 2004, **40**, (6), pp. 1629–1636

[14] Song, X., Han, B., Zheng, S., *et al.*: 'High-precision sensorless drive for high-speed BLDC motors based on the virtual third harmonic back-Emf', *IEEE Trans. Power Electron.*, 2018, **33**, (2), pp. 1528–1540

[15] Darba, A., De Belie, F., Melkebeek, J.A.: 'A back-Emf threshold self-sensing method to detect the commutation instants in Bldc drives', *IEEE Trans. Ind. Electron.*, 2015, **62**, (10), pp. 6064–6075

[16] Darba, A., De Belie, F., Melkebeek, J.: 'Sensorless commutation and speed control of brushless DC-machine drives based on the back-Emf symmetric threshold-tracking'. Proc. IEEE IEMDC, Chicago, USA, July 2013, pp. 492–497

[17] Tae-Won, C., Quang-Vinh, T., Hong-Hee, L., *et al.*: 'Sensorless control of Bldc motor drive for an automotive fuel pump using a hysteresis comparator', *IEEE Trans. Power Electron.*, 2014, **29**, (3), pp. 1382–1391

[18] Liu, G., Cui, C., Wang, K., *et al.*: 'Sensorless control for high-speed brushless DC motor based on the line-to-line back Emf', *IEEE Trans. Power Electron.*, 2016, **31**, (7), pp. 4669–4683

[19] Fang, J., Li, W., Li, H.: 'Self-compensation of the commutation angle based on Dc-link current for high-speed brushless DC motors with low inductance', *IEEE Trans. Power Electron.*, 2014, **29**, (1), pp. 428–439

[20] Lee, A.-C., Wang, S., Fan, C.-J.: 'A current index approach to compensate commutation phase error for sensorless brushless DC motors with nonideal back Emf', *IEEE Trans. Power Electron.*, 2016, **31**, (6), pp. 4389–4399

[21] Lee, A.-C., Fan, C.-J., Chen, G.-H.: 'Current integral method for fine commutation tuning of sensorless brushless DC motor', *IEEE Trans. Power Electron.*, 2017, **32**, (12), pp. 9249–9266

[22] Zhou, X., Chen, X., Zeng, F., *et al.*: 'Fast commutation instant shift correction method for sensorless coreless Bldc motor based on terminal voltage information', *IEEE Trans. Power Electron.*, 2017, **32**, (12), pp. 9460–9472

[23] Li, W., Fang, J., Li, H., *et al.*: 'Position sensorless control without phase shifter for high-speed Bldc motors with low inductance and nonideal back Emf', *IEEE Trans. Power Electron.*, 2016, **31**, (2), pp. 1354–1366

[24] Zhou, X., Chen, X., Lu, M., *et al.*: 'Rapid self-compensation method of commutation phase error for low- inductance Bldc motor', *IEEE Trans. Ind. Inf.*, 2017, **13**, (4), pp. 1833–1842

[25] Li, H., Zheng, S., Ren, H.: 'Self-correction of commutation point for high-speed sensorless Bldc motor with low inductance and nonideal back Emf', *IEEE Trans. Power Electron.*, 2017, **32**, (1), pp. 642–651

[26] Lee, M., Kong, K.: 'Fourier-series-based phase delay compensation of brushless DC motor systems', *IEEE Trans. Power Electron.*, 2018, **33**, (1), pp. 525–534

[27] Scelba, G., De Donato, G., Pulvirenti, M., *et al.*: 'Hall-effect sensor fault detection, identification and compensation in brushless DC drives', *IEEE Trans. Ind. Appl.*, 2015, **52**, pp. 1542–1554

[28] Dong, L., Huang, Y., Jatskevich, J., *et al.*: 'Improved fault-tolerant control for brushless permanent magnet motor drives with defective Hall sensors', *IEEE Trans. Energy Convers.*, 2016, **31**, (2), pp. 789–799

[29] Dong, L., Jatskevich, J., Huang, Y., *et al.*: 'Fault diagnosis and signal reconstruction of Hall sensors in brushless permanent magnet motor drives', *IEEE Trans. Energy Convers.*, 2016, **31**, (1), pp. 118–131

[30] Park, J.S., Lee, K.-D.: 'Online advanced angle adjustment method for sinusoidal Bldc motors with misaligned Hall sensors', *IEEE Trans. Power Electron.*, 2017, **32**, (11), pp. 8247–8253

[31] Park, J.S., Choi, J.-H., Lee, J.: 'Compensation method of position signal error with misaligned Hall-effect sensors of Bldc motor', *J. Electr. Eng. Technol.*, 2016, **11**, (4), pp. 889–897

[32] Seol, H.-S., Lim, J., Kang, D.-W., *et al.*: 'Optimal design strategy for improved operation of Ipm Bldc motors with low-resolution Hall sensors', *IEEE Trans. Ind. Electron.*, 2017, **64**, (12), pp. 9758–9766

[33] Ravaud, R., Lemarquand, G., Lemarquand, V.: 'Ironless permanent magnet motors: three-dimensional analytical calculation'. Proc. IEEE IEMDC, Miami, USA, May 2009, pp. 941–946

© The Institution of Engineering and Technology 2019

17518679, 2020, 3, Downloaded from https://ietresearch.onlinelibrary.wiley.com/doi/10.1049/iet-epa.2018.5941 by Luis Alvarez-Icaza - Universidad Nacional Autonoma De Mexico , Wiley Online Library on [01/12/2025]. See the Terms and Conditions (https://onlinelibrary.wiley.com/terms-and-conditions) on Wiley Online Library for rules of use; OA articles are governed by the applicable Creative Commons License