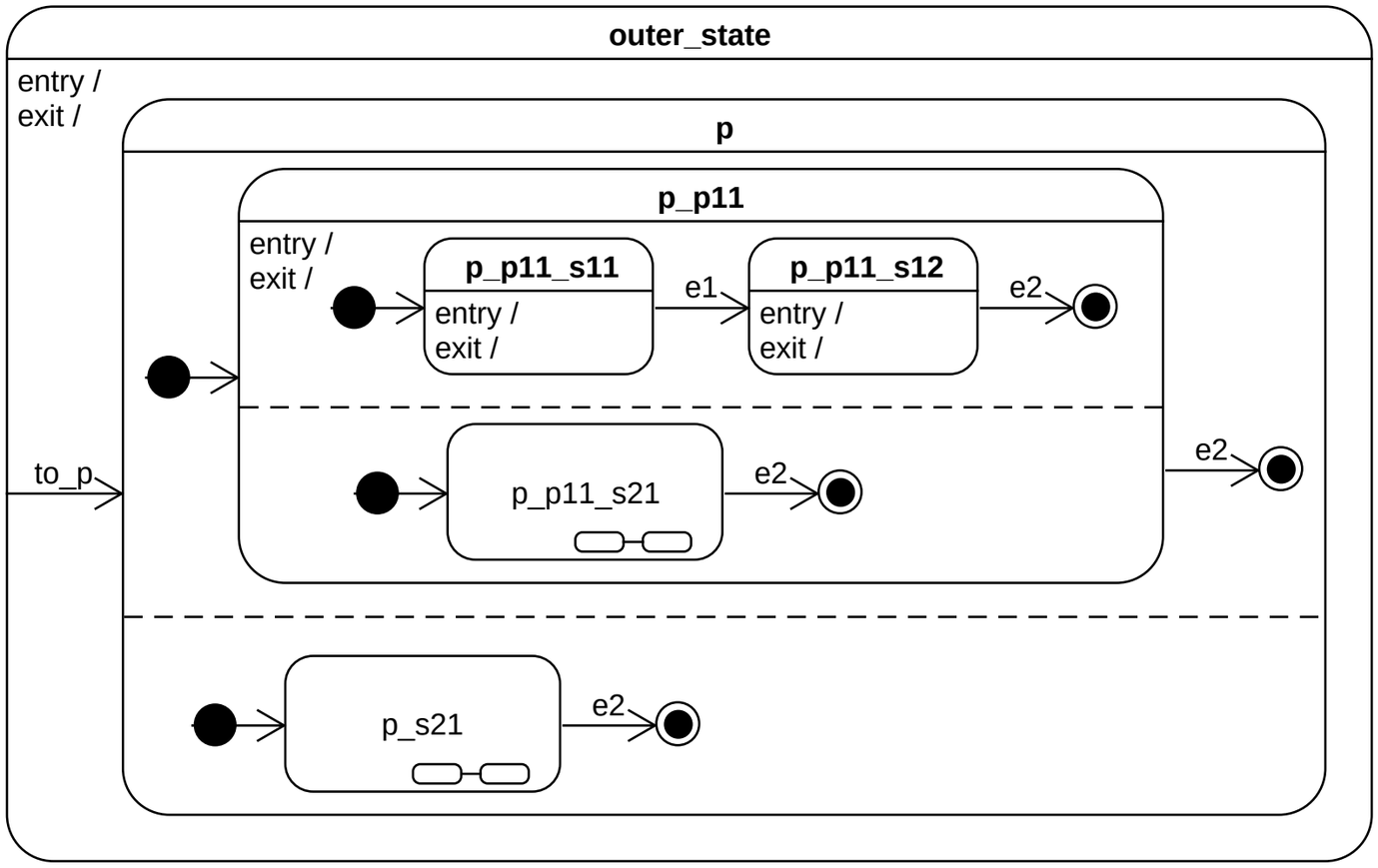

Harel Diagram
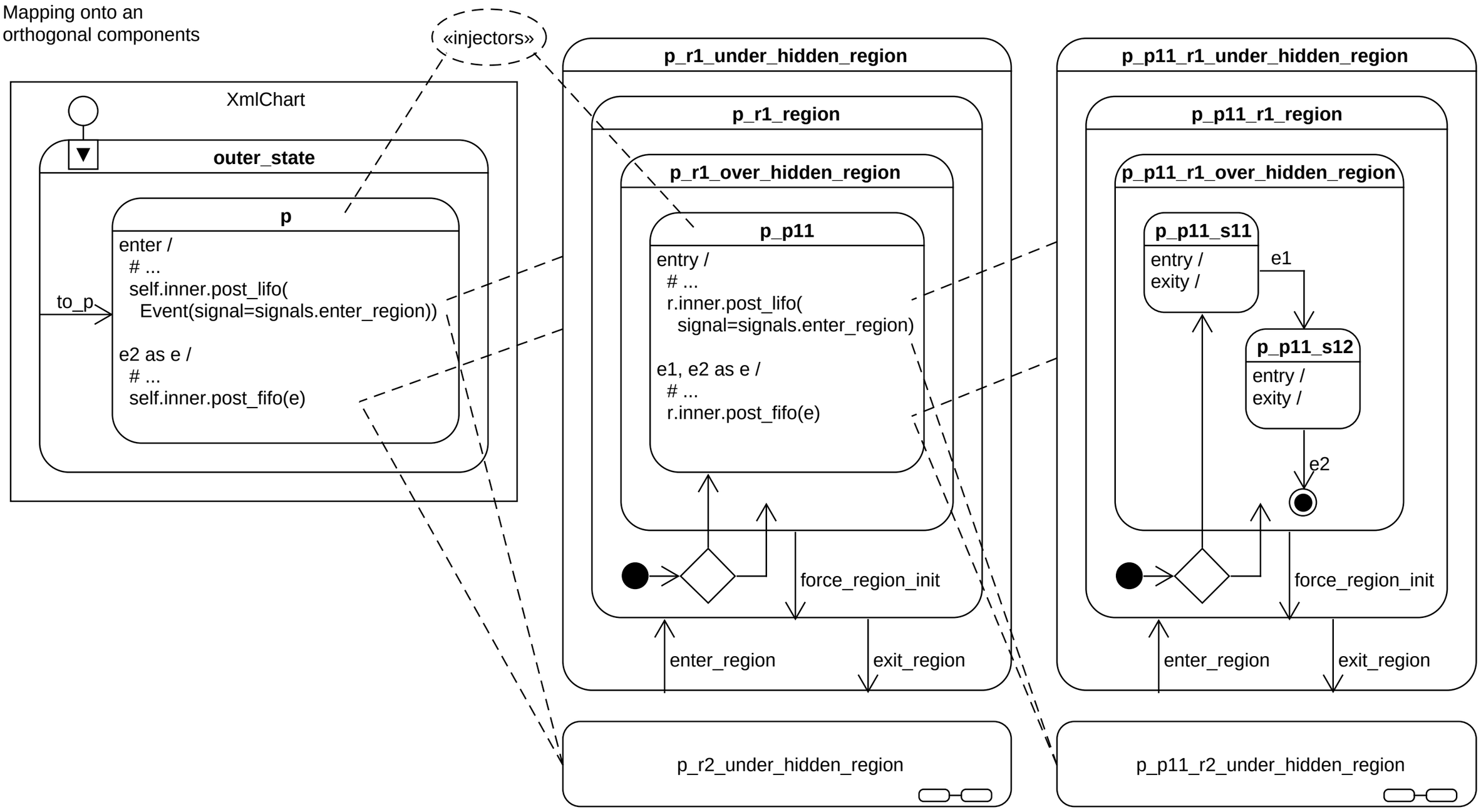
Mapping onto an
orthogonal components