ESP8266 module

Choose one, either bare ESP8266 or the one that has an USB and a 5V input.

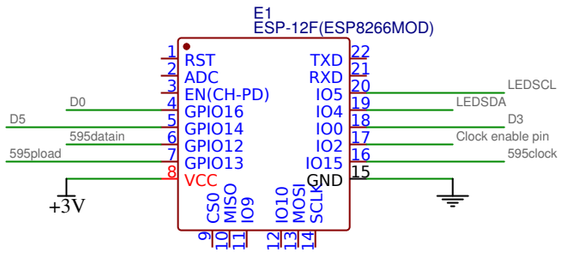

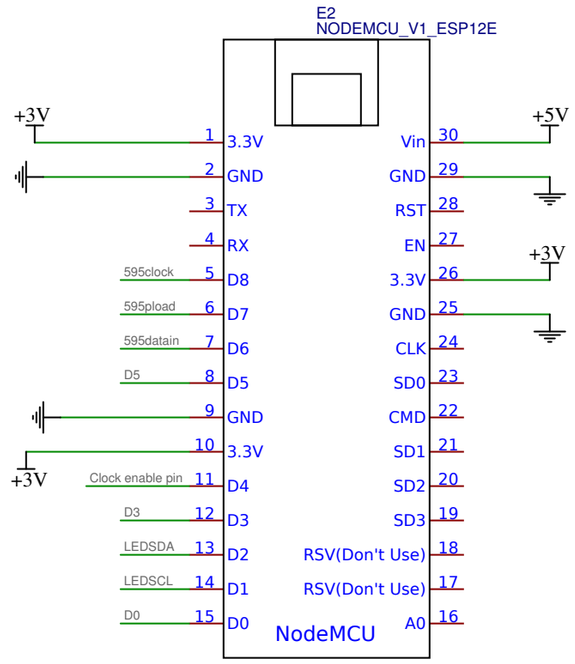

74HC165N Shift in register

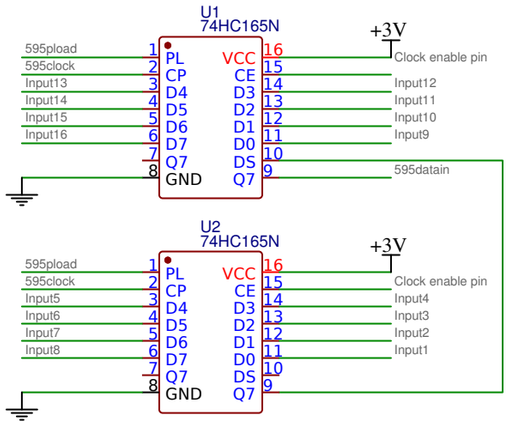

Buttons input filter

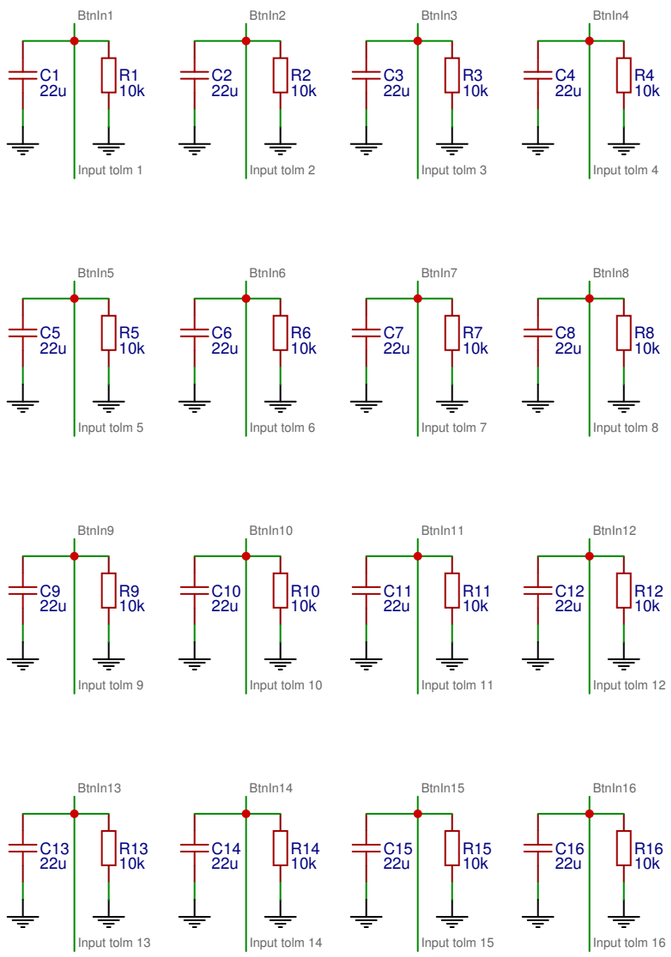

Input and output terminal

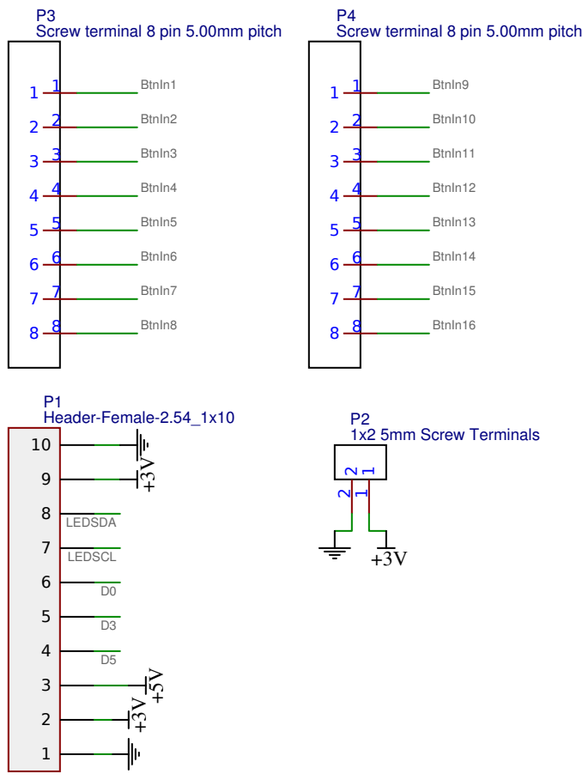

LM324N op amp

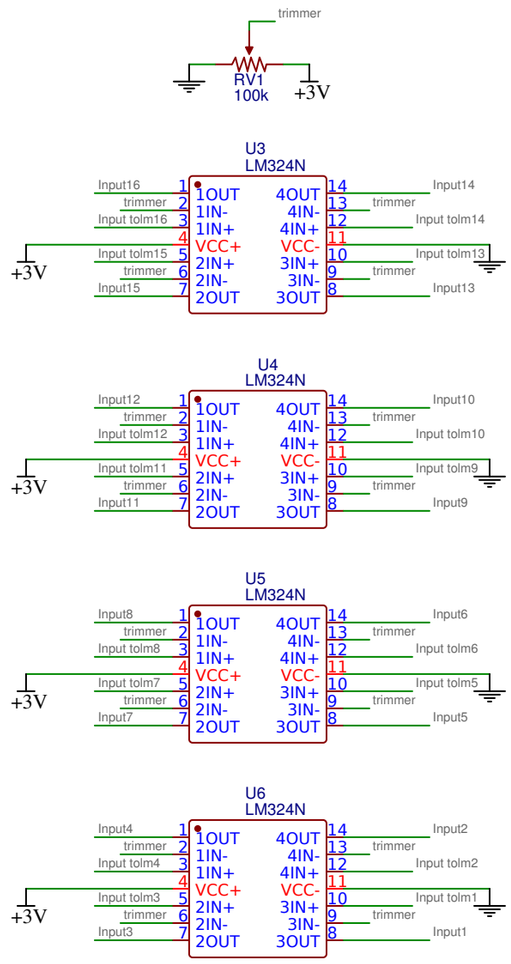

Before making a PCB check PCB footprints that match your components!

Test on a breadboard before making a PCB!

Be aware that shift in register (74HC165N) is a different thing as shift out (74HC595) register. One will work and the other won't.

Buttons should be connected to +3V and button in terminal.

This schematic should work, however double check. If any mistakes are found let me know so I will fix them.

Enjoy DIYing!

TITLE: UGS Wifi Pendant	REV: 1.0
Date: 2019-01-29	Sheet: 1/1
EASYEDA V5.9.41	Drawn By: aleslukek