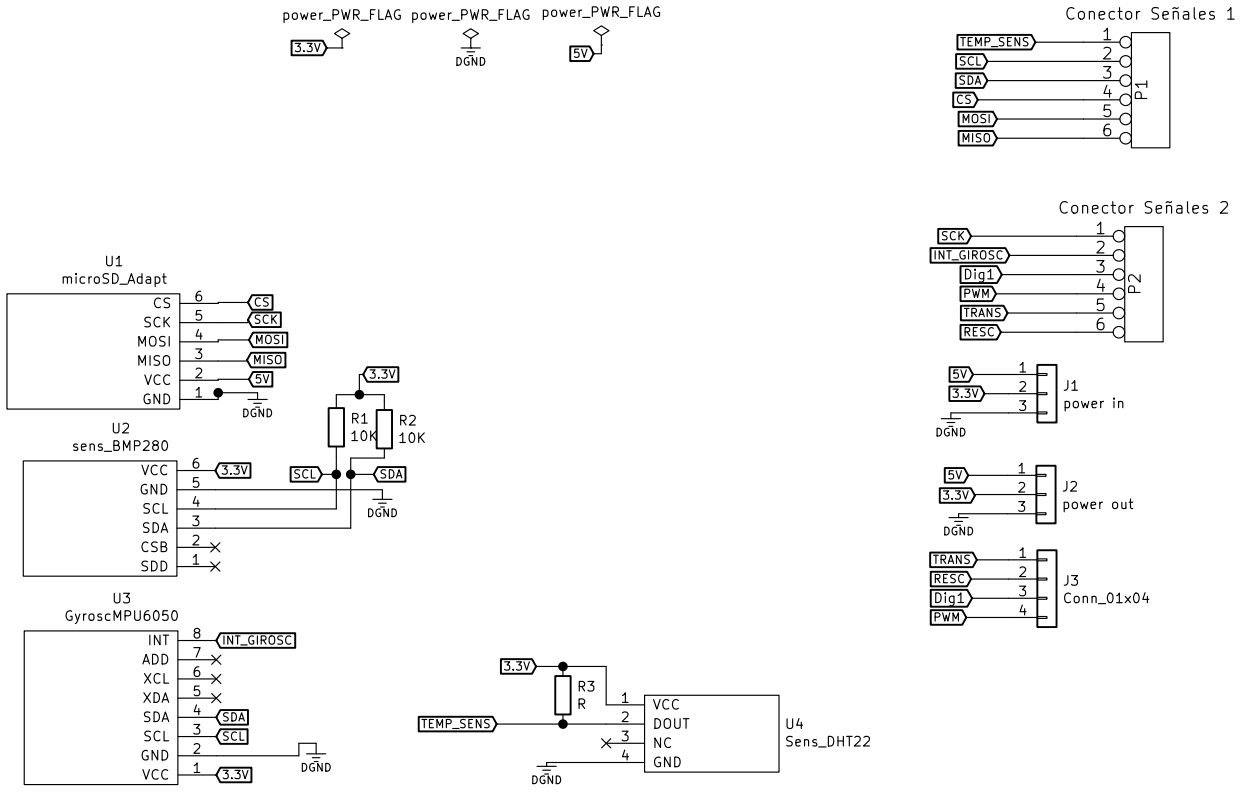

Arapy Tech

Sheet: /

File: placa_sensores.sch

Title: PCB de sensores

Size: A4	Date: 2020-01-09	**Rev: Alejandro Espinoza**
KiCad E.D.A. kicad (5.1.2)-2		Id: 1/1