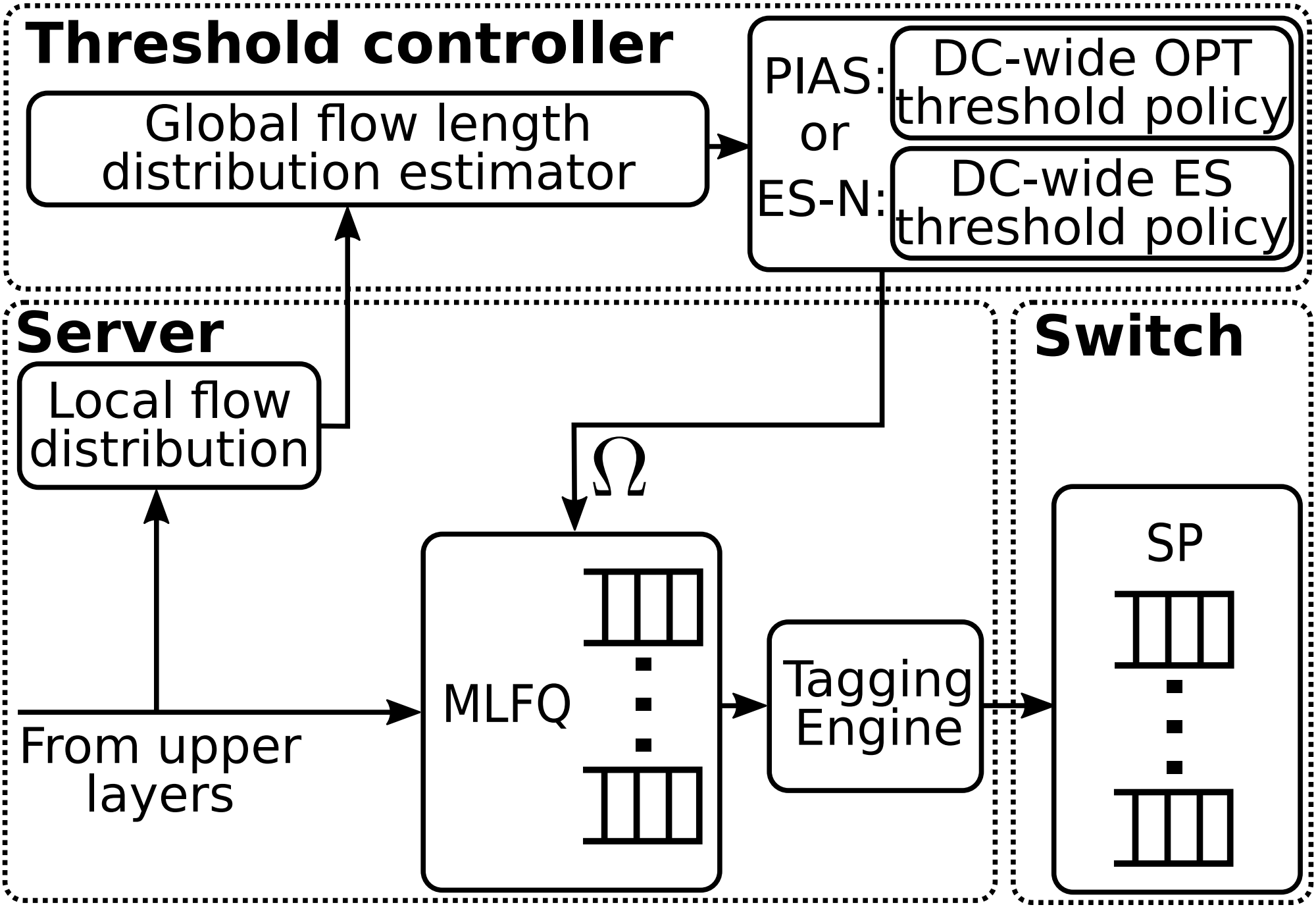
Threshold controller
Global flow length distribution estimator
PIAS: or ES-N:
DC-wide OPT threshold policy
DC-wide ES threshold policy
Server
Local flow distribution
Ω
MLFQ
Tagging Engine
From upper layers
Switch
SP