SERVICE MANUAL

notebook

N870EK1 / N871EK1

Notebook Computer

N870EK1 / N871EK1

Service Manual

Notice

The company reserves the right to revise this publication or to change its contents without notice. Information contained herein is for reference only and does not constitute a commitment on the part of the manufacturer or any subsequent vendor. They assume no responsibility or liability for any errors or inaccuracies that may appear in this publication nor are they in anyway responsible for any loss or damage resulting from the use (or misuse) of this publication.

This publication and any accompanying software may not, in whole or in part, be reproduced, translated, transmitted or reduced to any machine readable form without prior consent from the vendor, manufacturer or creators of this publication, except for copies kept by the user for backup purposes.

Brand and product names mentioned in this publication may or may not be copyrights and/or registered trademarks of their respective companies. They are mentioned for identification purposes only and are not intended as an endorsement of that product or its manufacturer.

Version 1.0
May 2018

Trademarks

Intel and Intel Core are trademarks of Intel Corporation.
Windows® is a registered trademark of Microsoft Corporation.
Other brand and product names are trademarks and /or registered trademarks of their respective companies.

HDMI™
HIGH-DEFINITION MULTIMEDIA INTERFACE

About this Manual

This manual is intended for service personnel who have completed sufficient training to undertake the maintenance and inspection of personal computers.

It is organized to allow you to look up basic information for servicing and/or upgrading components of the ***N870EK1 / N871EK1*** series notebook PC.

The following information is included:

Chapter 1, Introduction, provides general information about the location of system elements and their specifications.
Chapter 2, Disassembly, provides step-by-step instructions for disassembling parts and subsystems and how to upgrade elements of the system.

Appendix A, Part Lists
Appendix B, Schematic Diagrams
Appendix C, Updating the FLASH ROM BIOS

IMPORTANT SAFETY INSTRUCTIONS

Follow basic safety precautions, including those listed below, to reduce the risk of fire, electric shock and injury to persons when using any electrical equipment:

1. Do not use this product near water, for example near a bath tub, wash bowl, kitchen sink or laundry tub, in a wet basement or near a swimming pool.
2. Avoid using a telephone (other than a cordless type) during an electrical storm. There may be a remote risk of electrical shock from lightning.
3. Do not use the telephone to report a gas leak in the vicinity of the leak.
4. Use only the power cord and batteries indicated in this manual. Do not dispose of batteries in a fire. They may explode. Check with local codes for possible special disposal instructions.
5. This product is intended to be supplied by a Listed Power Unit as follows:

- AC Input of 100 - 240V, 50 - 60Hz, DC Output of 19.5V, 6.15A (**120** Watts) minimum AC/DC Adapter.

FCC Statement

This device complies with Part 15 of the FCC Rules. Operation is subject to the following two conditions:
This device may not cause harmful interference.
This device must accept any interference received, including interference that may cause undesired operation.

Instructions for Care and Operation

The notebook computer is quite rugged, but it can be damaged. To prevent this, follow these suggestions:

1. **Don't drop it, or expose it to shock.** If the computer falls, the case and the components could be damaged.

Do not expose the computer to any shock or vibration.	*Do not place it on an unstable surface.*	*Do not place anything heavy on the computer.*
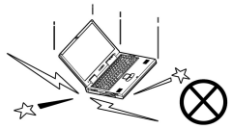	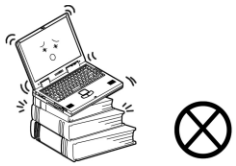	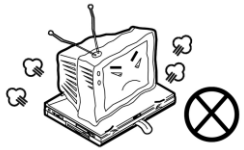

2. **Keep it dry, and don't overheat it.** Keep the computer and power supply away from any kind of heating element. This is an electrical appliance. If water or any other liquid gets into it, the computer could be badly damaged.

Do not expose it to excessive heat or direct sunlight.	*Do not leave it in a place where foreign matter or moisture may affect the system.*	*Don't use or store the computer in a humid environment.*	*Do not place the computer on any surface which will block the vents.*
		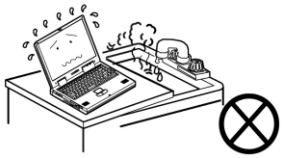	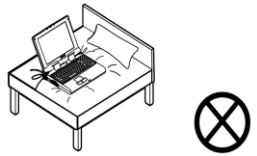

3. **Follow the proper working procedures for the computer**. Shut the computer down properly and don't forget to save your work. Remember to periodically save your data as data may be lost if the battery is depleted.

Do not turn off the power until you properly shut down all programs.	*Do not turn off any peripheral devices when the computer is on.*	*Do not disassemble the computer by yourself.*	*Perform routine maintenance on your computer.*
	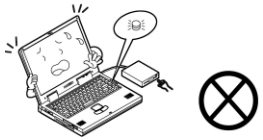		

4. **Avoid interference.** Keep the computer away from high capacity transformers, electric motors, and other strong magnetic fields. These can hinder proper performance and damage your data.
5. **Take care when using peripheral devices**.

Use only approved brands of peripherals.	*Unplug the power cord before attaching peripheral devices.*
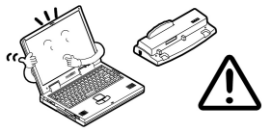	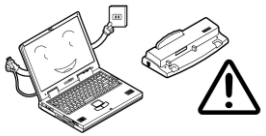

Power Safety

The computer has specific power requirements:

- Only use a power adapter approved for use with this computer.
- Your AC adapter may be designed for international travel but it still requires a steady, uninterrupted power supply. If you are unsure of your local power specifications, consult your service representative or local power company.
- The power adapter may have either a 2-prong or a 3-prong grounded plug. The third prong is an important safety feature; do not defeat its purpose. If you do not have access to a compatible outlet, have a qualified electrician install one.
- When you want to unplug the power cord, be sure to disconnect it by the plug head, not by its wire.
- Make sure the socket and any extension cord(s) you use can support the total current load of all the connected devices.
- Before cleaning the computer, make sure it is disconnected from any external power supplies.

Power Safety Warning

Before you undertake any upgrade procedures, make sure that you have turned off the power, and disconnected all peripherals and cables (including telephone lines and power cord). It is advisable to also remove your battery in order to prevent accidentally turning the machine on.

Do not plug in the power cord if you are wet.	*Do not use the power cord if it is broken.*	*Do not place heavy objects on the power cord.*
	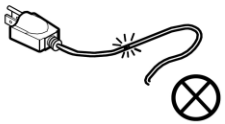	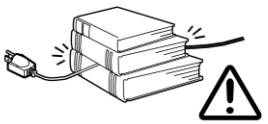

Battery Precautions

- Only use batteries designed for this computer. The wrong battery type may explode, leak or damage the computer.
- Do not continue to use a battery that has been dropped, or that appears damaged (e.g. bent or twisted) in any way. Even if the computer continues to work with a damaged battery in place, it may cause circuit damage, which may possibly result in fire.
- Recharge the batteries using the notebook's system. Incorrect recharging may make the battery explode.
- Do not try to repair a battery pack. Refer any battery pack repair or replacement to your service representative or qualified service personnel.
- Keep children away from, and promptly dispose of a damaged battery. Always dispose of batteries carefully. Batteries may explode or leak if exposed to fire, or improperly handled or discarded.
- Keep the battery away from metal appliances.
- Affix tape to the battery contacts before disposing of the battery.
- Do not touch the battery contacts with your hands or metal objects.

Battery Guidelines

The following can also apply to any backup batteries you may have.

- If you do not use the battery for an extended period, then remove the battery from the computer for storage.
- Before removing the battery for storage charge it to 60% - 70%.
- Check stored batteries at least every 3 months and charge them to 60% - 70%.

Battery Disposal

The product that you have purchased contains a rechargeable battery. The battery is recyclable. At the end of its useful life, under various state and local laws, it may be illegal to dispose of this battery into the municipal waste stream. Check with your local solid waste officials for details in your area for recycling options or proper disposal.

Caution

Danger of explosion if battery is incorrectly replaced. Replace only with the same or equivalent type recommended by the manufacturer. Discard used battery according to the manufacturer's instructions.

Battery Level

Click the battery icon in the taskbar to see the current battery level and charge status. A battery that drops below a level of 10% will not allow the computer to boot up. Make sure that any battery that drops below 10% is recharged within one week.

Related Documents

You may also need to consult the following manual for additional information:

User's Manual on CD/DVD

This describes the notebook PC's features and the procedures for operating the computer and its ROM-based setup program. It also describes the installation and operation of the utility programs provided with the notebook PC.

System Startup

1. Remove all packing materials.
2. Place the computer on a stable surface.
3. Insert the battery and make sure it is locked in position.
4. Securely attach any peripherals you want to use with the computer (e.g. keyboard and mouse) to their ports.
5. **When first setting up the computer use the following procedure** (as to safeguard the computer during shipping, the battery will be locked to not power the system until first connected to the AC/DC adapter and initially set up as below):
   - Attach the AC/DC adapter cord to the DC-In jack on the left of the computer, then plug the AC power cord into an outlet, and connect the AC power cord to the AC/DC adapter and **leave it there for 6 seconds or longer**.
   - Remove the adapter cord from the computer's DC-In jack, and then plug it back in again; the battery will now be unlocked.
6. Use one hand to raise the lid/LCD to a comfortable viewing angle (do not exceed 135 degrees); use the other hand (as illustrated in Figure 1) to support the base of the computer (**Note**: **Never** lift the computer by the lid/LCD).
7. Press the power button to turn the computer "on".

Powering the Computer On

After every disassembly, make sure that the bottom case's screws are all inserted and tightened before turning the computer on.

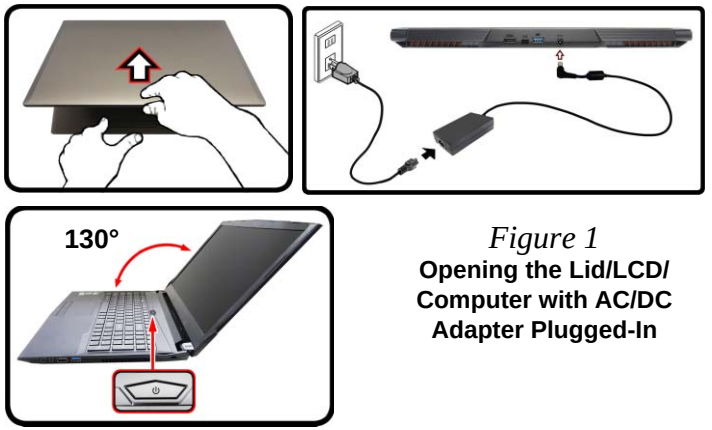

Figure 1
Opening the Lid/LCD/ Computer with AC/DC Adapter Plugged-In

Shut Down

Note that you should always shut your computer down by choosing the **Shut down** command in ***Windows*** (see below). This will help prevent hard disk or system problems.

Click the icon in the **Start Screen** and choose **Shut down** from the menu.

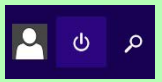

Or

Right-click the **Start button** at the bottom of the **Start Screen** or the **Desktop** and choose **Shut down or sign out > Shut down** from the context menu.

Contents

Introduction 1-1

Overview 1-1
Specifications 1-2
External Locator - Top View with LCD Panel Open 1-4
External Locator - Front & Right Side Views 1-5
External Locator - Left Side & Rear View 1-6
External Locator - Bottom View 1-7
Mainboard Overview - Top (Key Parts) 1-8
Mainboard Overview - Bottom (Key Parts) 1-9
Mainboard Overview - Top (Connectors) 1-10
Mainboard Overview - Bottom (Connectors) 1-11

Disassembly 2-1

Overview 2-1
Maintenance Tools 2-2
Connections 2-2
Maintenance Precautions 2-3
Disassembly Steps 2-4
Removing the Battery 2-5
Removing the Keyboard 2-6
Removing the Hard Disk Drive 2-7
Removing the System Memory (RAM) 2-9
Removing and Installing the M.2 SSD Module 2-10
Removing the Wireless LAN Module 2-11
Wireless LAN, Combo Module Cables 2-12
Removing the CPU Heat Sink 2-13
Removing the CCD 2-14

Part Lists A-1

Part List Illustration Location A-2
Top A-3
Bottom A-4
Main Board A-5
HDD A-6
LCD A-7

Schematic Diagrams.....B-1

System Block Diagram B-2
Processor 1/6 .....B-3
Processor 2/6 .....B-4
Processor 3/6 .....B-5
Processor 4/6 .....B-6
Processor 5/6 .....B-7
Processor 6/6 .....B-8
DDR4 CHA SO-DIMM B-9
DDR4 CHB SO-DIMM B-10
VGA PCI-E Interface B-11
VGA Frame Buffer Interface B-12
VGA Frame Buffer A B-13
VGA Frame Buffer A B-14
VGA Frame Buffer B B-15
VGA Frame Buffer B B-16
VGA I/O B-17
NVIDIA Power Sequence B-18
NVIDIA GPIO Level Shift B-19
VGA NVVDD Coupling B-20
MDP B-21
MDP B-22
Panel, Inverter B-23
HDMI B-24
PCH 1/9 .....B-25
PCH 2/9 .....B-26

PCH 3/9 ..... B-27
PCH 4/9 ..... B-28
PCH 5/9 ..... B-29
PCH 6/9 ..... B-30
PCH 7/9 ..... B-31
PCH 8/9 ..... B-32
PCH 9/9 ..... B-33
M.2 3G Card B-34
M.2 WLAN+BT, SSD B-35
USB Conn, USB Charger B-36
Card Reader / LAN RTL8411B B-37
HDD, Click TP, Audio, Hall Con. B-38
LED, CCD, TPM, Power SW Con. B-39
Audio Codec ALC269 VC2 ..... B-40
KBC-ITE IT8587 ..... B-41
RGB KB Only B-42
5V, 5VS, 3.3V, 3.3VS, 3.3VA B-43
VDD1.0V, VCCIO B-44
VDD3, VDD5 ..... B-45
DDR 1.2V / 0.6VS, 2.5V B-46
VCore, VCCGT Output Stage B-47
VCC_Core & VCCGT B-48
1.0DX_VCCSTG/VCCSFR_OC, 3.3VA B-49
VCCSA B-50
AC_In, Charger B-51
NVVDD B-52
FBVDDQ B-53
PEX_VDD/3V3/1.8V B-54
Audio Board B-55
Power Switch Board B-56
Hall Sensor Board B-57
Click Board B-58
LED Board B-59
Finger Print Board B-60
Power Sequence B-61

Updating the FLASH ROM BIOS..... C-1

Download the BIOS C-1
Unzip the downloaded files to a bootable CD/DVD or
USB Flash drive C-1
Set the computer to boot from the external drive C-1
Use the flash tools to update the BIOS C-2
Restart the computer (booting from the HDD) C-2

Chapter 1: Introduction

Overview

This manual covers the information you need to service or upgrade the ***N870EK1 / N871EK1*** series notebook computer. Information about operating the computer (e.g. getting started, and the *Setup* utility) is in the *User's Manual*. Information about dri-vers (e.g. VGA & audio) is also found in the *User's Manual*. The manual is shipped with the computer.

Operating systems (e.g. *Windows 10*, etc.) have their own manuals as do application softwares (e.g. word processing and database programs). If you have questions about those programs, you should consult those manuals.

The ***N870EK1 / N871EK1*** series notebook is designed to be upgradeable. See ***Disassembly on page 2 - 1*** for a detailed description of the upgrade procedures for each specific component. Please take note of the warning and safety information indicated by the " " symbol.

The balance of this chapter reviews the computer's technical specifications and features.

Specifications

Latest Specification Information

The specifications listed here are correct at the time of sending them to the press. Certain items (particularly processor types/speeds) may be changed, delayed or updated due to the manufacturer's release schedule. Check with your service center for more details.

CPU

The CPU is not a user serviceable part. Accessing the CPU in any way may violate your warranty.

Processor Options

Intel® Core™ i7 Processor
i7-8750H (2.20GHz)
9MB Smart Cache, **14nm**, DDR4-2666MHz, TDP 45W
Intel® Core™ i5 Processor
i5-8300H (2.30GHz)
9MB Smart Cache, **14nm**, DDR4-2666MHz, TDP 45W

Core Logic

Intel® HM370 Express Chipset

BIOS

128Mb SPI Flash ROM
AMI BIOS

Memory

Two 260 Pin SO-DIMM Sockets Supporting **DDR4 2400/ DDR4 2666MHz** Memory
Memory Expandable up to 32GB

(The real memory operating frequency depends on the FSB of the processor.)

LCD Options

17.3" (43.94cm), 16:9, FHD (1920x1080)

Audio

High Definition Audio Compliant Interface
2 * Built-In Speakers
Built-In Array Microphone
Sound Blaster™ Cinema 5

Video Adapter

Intel® Integrated GPU and NVIDIA® Discrete GPU

Supports Microsoft Hybrid Graphics

Intel Integrated GPU
Intel® UHD Graphics 630
Dynamic Frequency
Intel Dynamic Video Memory Technology
Microsoft DirectX®12 Compatible

NVIDIA® Discrete GPU
NVIDIA® GeForce GTX 1050 Ti
4GB GDDR5 Video RAM on board
Microsoft DirectX® 12 Compatible

Storage

One Changeable 2.5" 7.0mm (h) SATA3 HDD/SSD
(**Factory Option**) One M.2 **SATA/PCIe Gen3 x4** Solid State Drive (SSD)

Security

Security (Kensington® Type) Lock Slot
(**Factory Option**) TPM v2.0
(**Factory Option**) Fingerprint Reader Module
Intel PTT for systems without hardware TPM

Keyboard

Full Size White LED Illuminated Keyboard with Numeric Pad (**Factory Option**)
Full Size Colored RGB LED Illuminated Keyboard with Numeric Pad (**Factory Option**)

Pointing Device

Built-in Touchpad

Interface

One USB 2.0 Port
One USB 3.0 (USB 3.1 Gen 1) Type-A Port
One USB 3.1 Gen 2 Type-A Port
One USB 3.1 Gen 2 Type-C Port*

One HDMI-Out Port
Two Mini DisplayPorts
One External Monitor Port
One Headphone-Out Jack
One Microphone-In Jack
One RJ-45 LAN Jack
One DC-in Jack

USB 3.1 Gen 2

Note that when a single USB device is plugged in to a USB 3.1 Gen 2 port the data transfer speed will be 10Gbps, however when two devices are plugged in to both USB 3.1 Gen 2 ports, this bandwidth will be shared between the ports.

Card Reader

Embedded Multi-In-1 Card Reader
MMC (MultiMedia Card) / RS MMC
SD (Secure Digital) / Mini SD / SDHC/ SDXC

M.2 Slots

Slot 1 for **Combo WLAN and Bluetooth** Module
Slot 2 for **SATA** or **PCIe Gen3 x4 SSD**

Communication

Built-In Gigabit Ethernet LAN
1.0M HD PC Camera Module
(**Factory Option**) 2.0M FHD PC Camera Module

WLAN/ Bluetooth M.2 Modules:

(**Factory Option**) Intel® Dual Band Wireless-AC 9260 Wireless LAN (**802.11ac**) + Bluetooth
(**Factory Option**) Intel® Dual Band Wireless-AC 9560 Wireless LAN (**802.11ac**) + Bluetooth
(**Factory Option**) Intel® Dual band Wireless-AC 9462 Wireless LAN (**802.11ac**) + Bluetooth

Environmental Spec

Temperature
Operating: 5°C - 35°C
Non-Operating: -20°C - 60°C
Relative Humidity
Operating: 20% - 80%
Non-Operating: 10% - 90%

Power

Full Range AC/DC Adapter
AC Input: 100 - 240V, 50 - 60Hz
DC Output: 19.5V, 6.15A (**120W**)

(**Factory Option**) Removable 6 Cell Smart Lithium-Ion Battery Pack, 62WH
(**Factory Option**) Removable 6 Cell Smart Lithium-Ion Battery Pack, 47WH

Dimensions & Weight

418.5mm (w) * 288.7mm (d) * 27.4mm (h)
2.9kg (Barebone with 47WH Battery)

External Locator - Top View with LCD Panel Open

Figure 1
Top View

1. PC Camera
2. *PC Camera LED
   **When the PC camera is in use, the LED will be illuminated.*
3. Built-In Array Microphone
4. LCD
5. Power Button
6. Keyboard
7. Touchpad & Buttons

External Locator - Front & Right Side Views

FRONT VIEW

Figure 2
Front View

1. LED Indicator

RIGHT SIDE VIEW

Figure 3
Right Side View

1. Headphone-Out Jack
2. Microphone-In Jack
3. USB 2.0 Port
4. USB 3.0 (USB 3.1 Gen 1) Type A Port
5. Vent

External Locator - Left Side & Rear View

Figure 4
Left Side View

1. Security Lock Slot
2. DC-In Jack
3. RJ-45 LAN Jack
4. Mini Display Port
5. HDMI-Out Port
6. USB 3.1 Gen 2 Type C Port
7. USB 3.1 Gen 2 Type A Port
8. Multi-in-1 Card Reader

LEFT SIDE VIEW

REAR VIEW

Figure 5
Rear View

1. Vent

External Locator - Bottom View

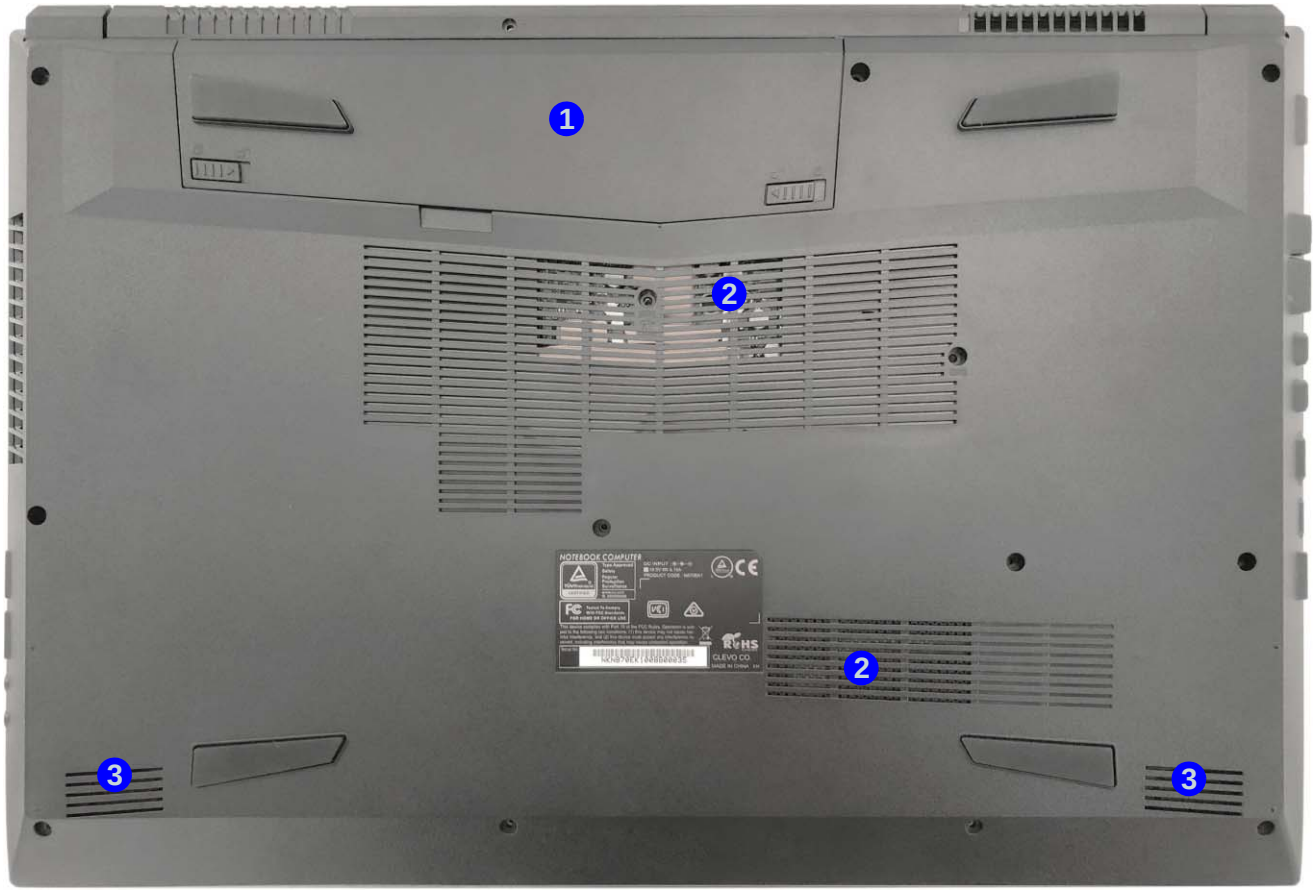

Figure 6
Bottom View

1. Battery
2. Vent
3. Speakers

Overheating

To prevent your computer from overheating, make sure nothing blocks any vent while the computer is in use.

Mainboard Overview - Top (Key Parts)

Figure 7
Mainboard Top Key Parts

1. KBC-ITE IT8587

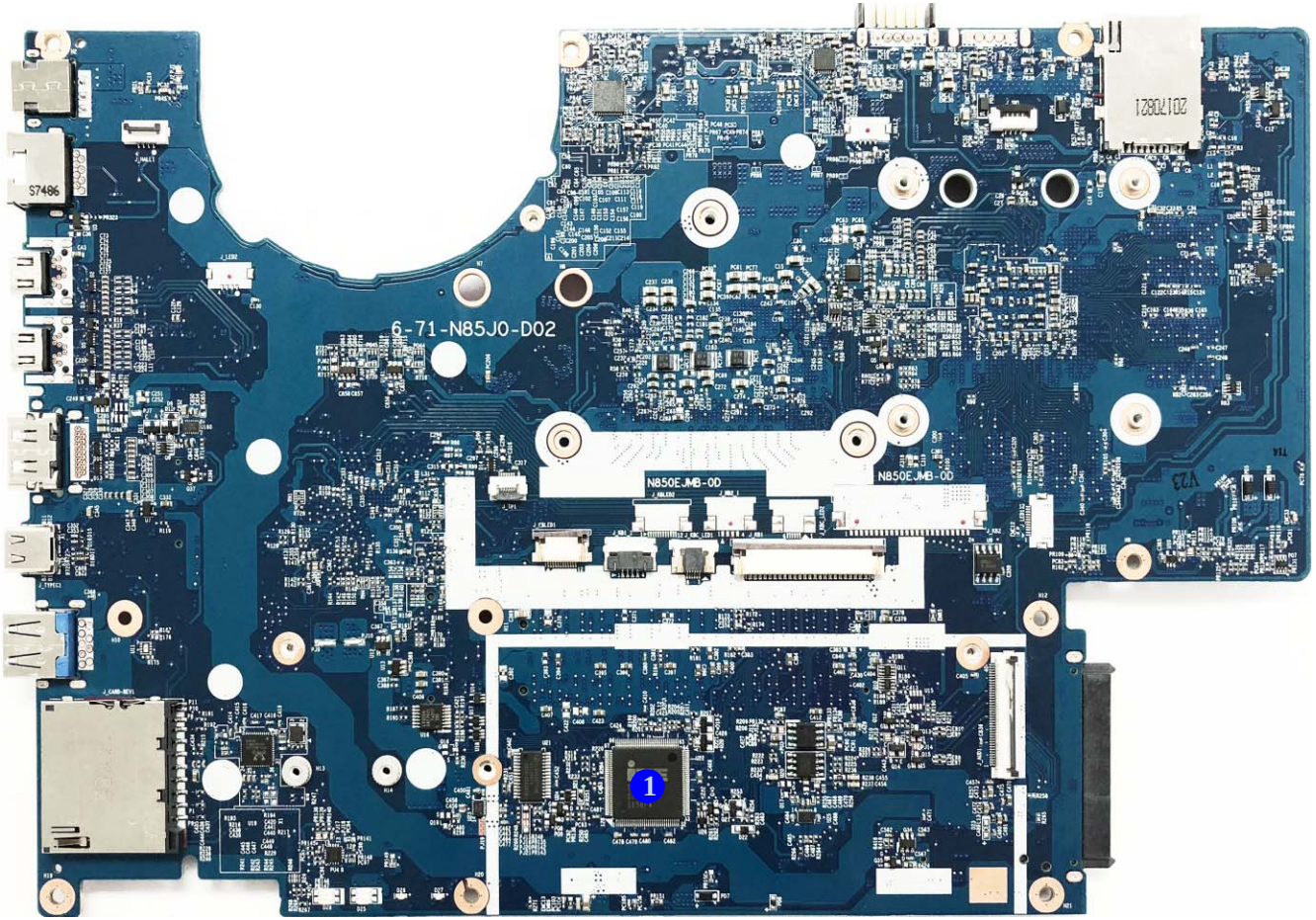

Mainboard Overview - Bottom (Key Parts)

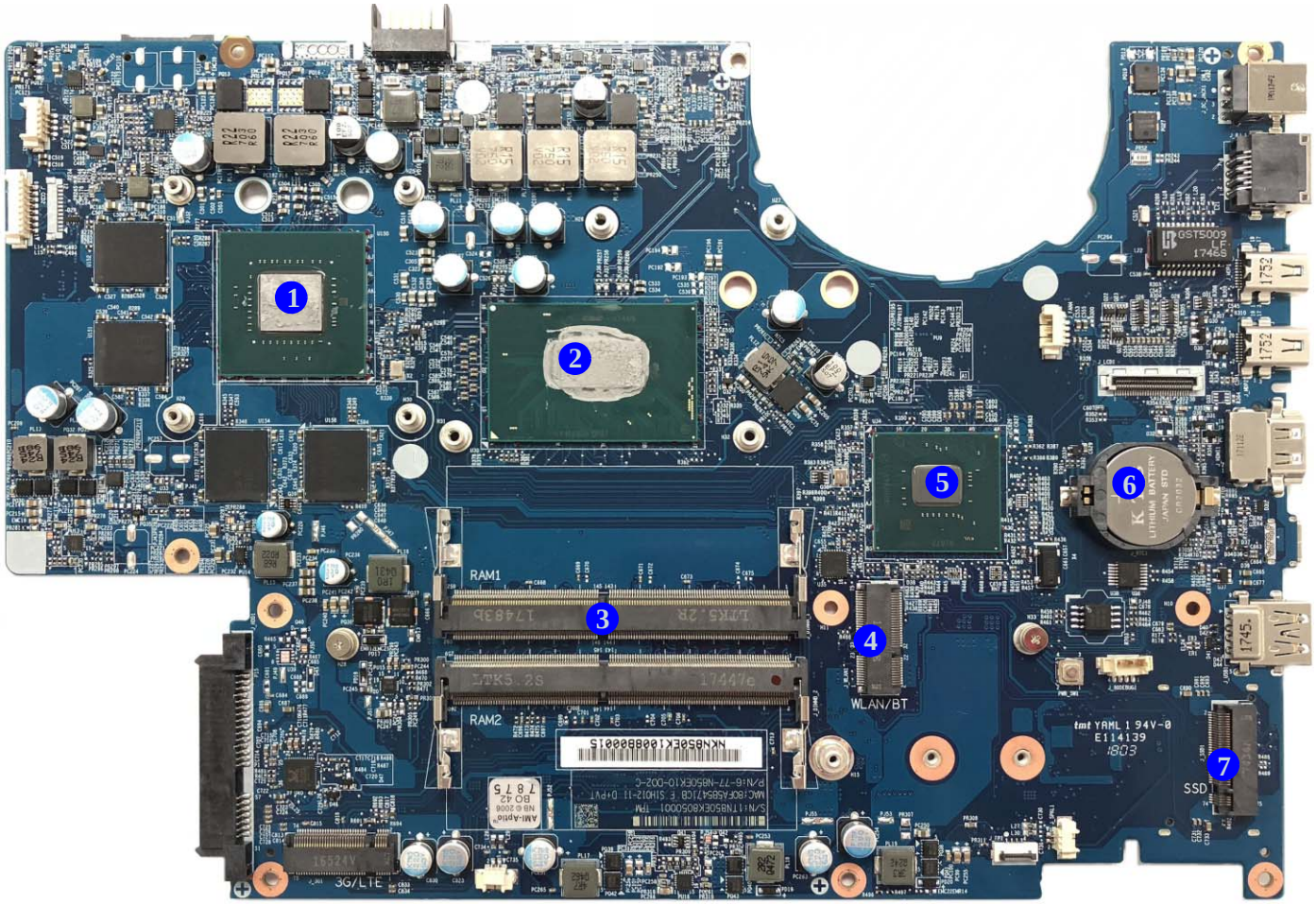

Figure 8
Mainboard Bottom Key Parts

1. GPU
2. CPU
3. Memory Slots DDR4 SO-DIMM
4. Mini-Card Connector (WLAN Module)
5. PCH
6. CMOS Battery
7. M.2-Card Connector (SSD Module)

Mainboard Overview - Top (Connectors)

Figure 9
Mainboard Top Connectors

1. DC-In Jack
2. RJ-45 LAN Jack
3. External Display Port
4. HDMI-Out Port
5. USB Port 3.0/3.1 (Type C) Connector
6. USB Port 3.0/3.1 (Type A) Connector
7. Multi-in-1 Card Reader
8. Keyboard Cable Connector

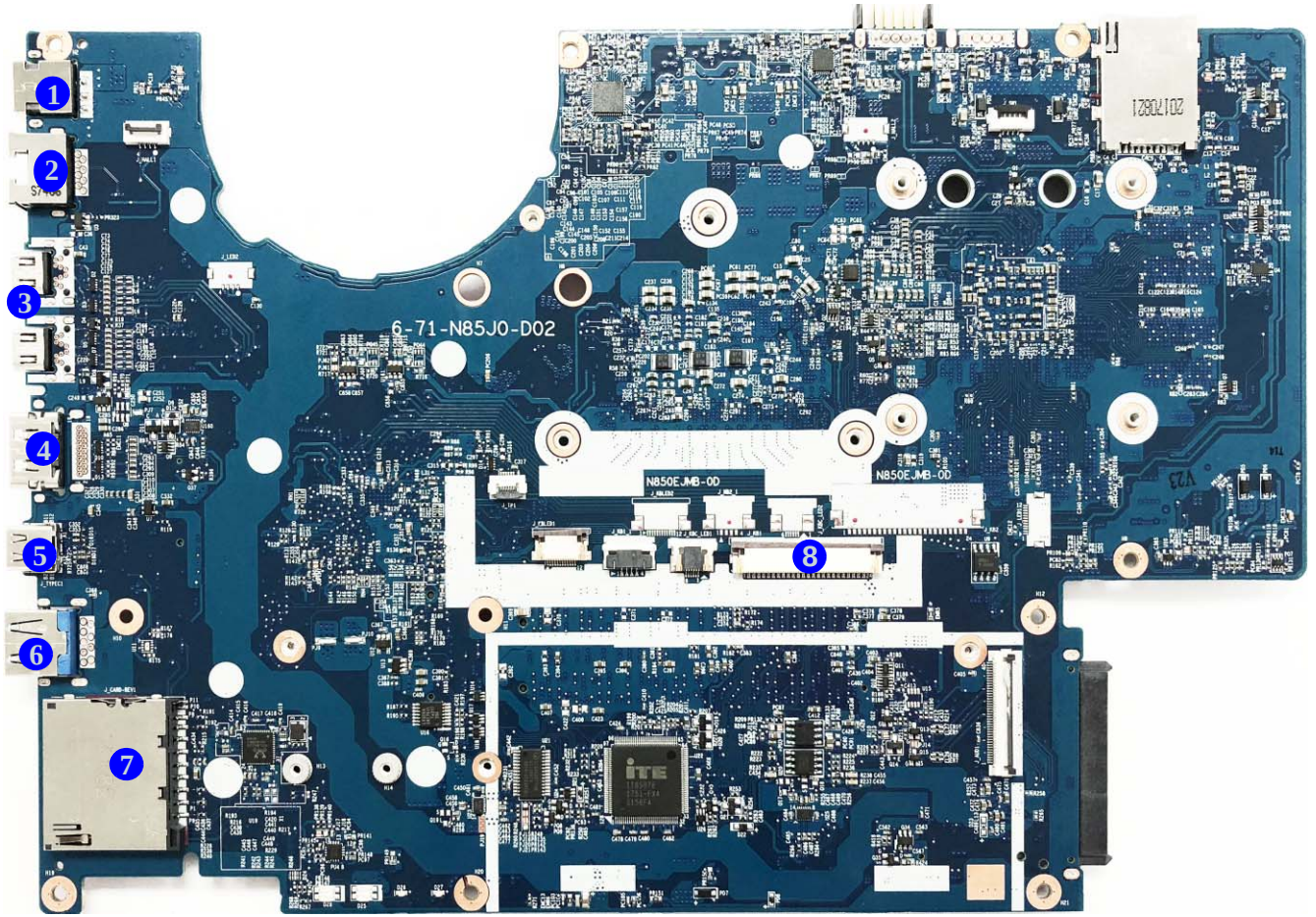

Mainboard Overview - Bottom (Connectors)

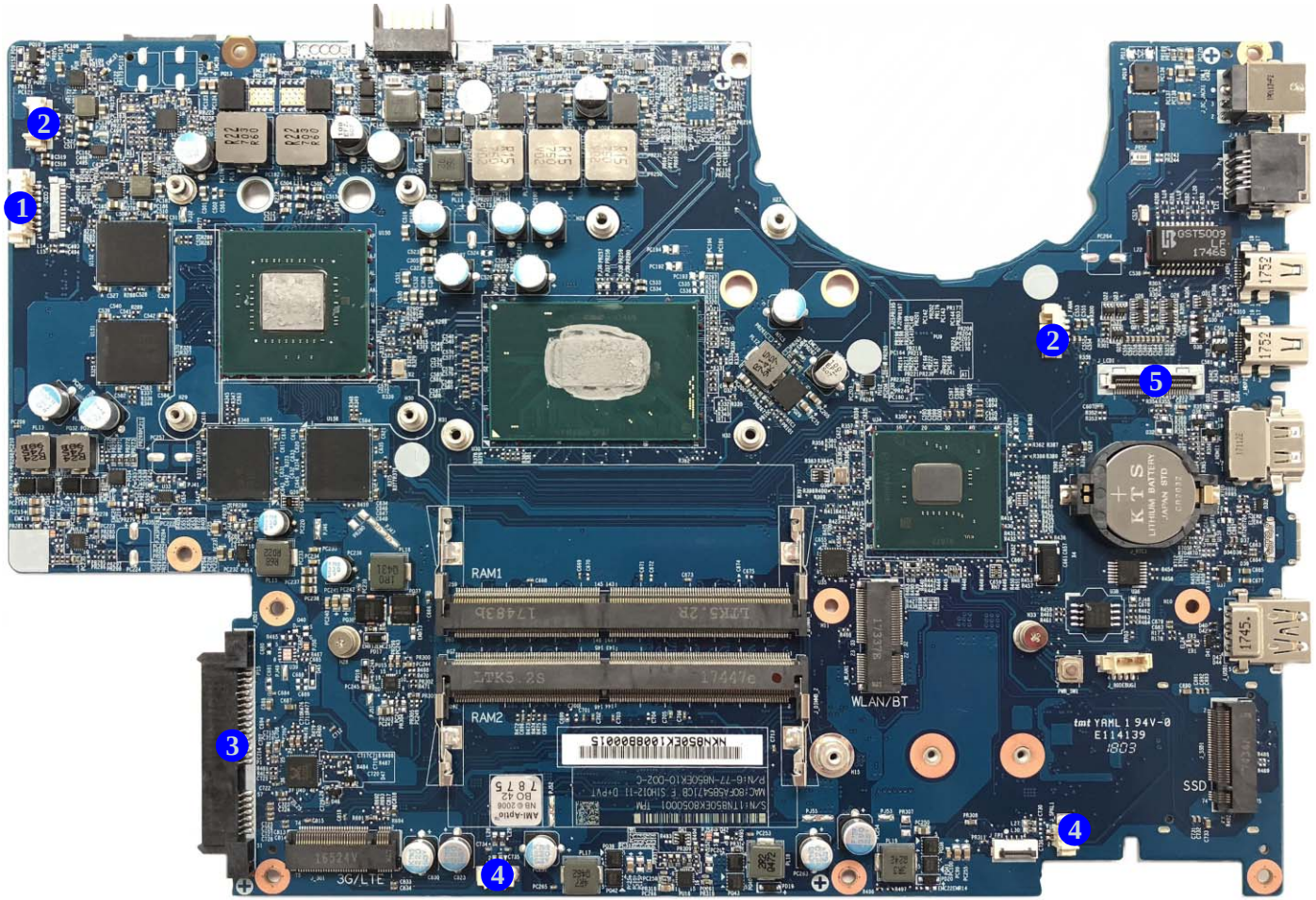

Figure 10
Mainboard Bottom Connectors

1. CCD Connector
2. Fan Connector
3. HDD Connector
4. Speaker Connector
5. LCD Connector

Chapter 2: Disassembly

Overview

This chapter provides step-by-step instructions for disassembling the ***N870EK1 / N871EK1*** series notebook's parts and subsystems. When it comes to reassembly, reverse the procedures (unless otherwise indicated).

We suggest you completely review any procedure before you take the computer apart.

Procedures such as upgrading/replacing the RAM, optical device and hard disk are included in the User's Manual but are repeated here for your convenience.

To make the disassembly process easier each section may have a box in the page margin. Information contained under the figure # will give a synopsis of the sequence of procedures involved in the disassembly procedure. A box with a lists the relevant parts you will have after the disassembly process is complete. **Note**: The parts listed will be for the disassembly procedure listed ONLY, and not any previous disassembly step(s) required. Refer to the part list for the previous disassembly procedure. The amount of screws you should be left with will be listed here also.

A box with a will also provide any possible helpful information. A box with a contains warnings.

An example of these types of boxes are shown in the sidebar.

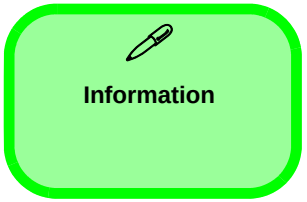

NOTE: All disassembly procedures assume that the system is turned **OFF**, and disconnected from any power supply (the battery is removed too).

Maintenance Tools

The following tools are recommended when working on the notebook PC:

- M3 Philips-head screwdriver
- M2.5 Philips-head screwdriver (magnetized)
- M2 Philips-head screwdriver
- Small flat-head screwdriver
- Pair of needle-nose pliers
- Anti-static wrist-strap

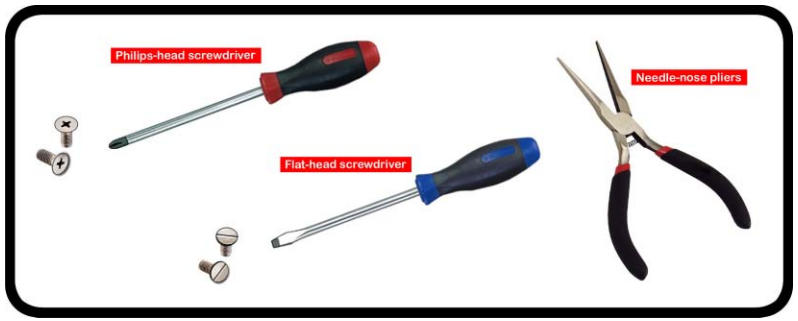

Connections

Connections within the computer are one of four types:

Locking collar sockets for ribbon connectors	To release these connectors, use a small flat-head screwdriver to gently pry the locking collar away from its base. When replacing the connection, make sure the connector is oriented in the same way. The pin1 side is usually not indicated.
Pressure sockets for multi-wire connectors	To release this connector type, grasp it at its head and gently rock it from side to side as you pull it out. Do not pull on the wires themselves. When replacing the connection, do not try to force it. The socket only fits one way.
Pressure sockets for ribbon connectors	To release these connectors, use a small pair of needle-nose pliers to gently lift the connector away from its socket. When replacing the connection, make sure the connector is oriented in the same way. The pin1 side is usually not indicated.
Board-to-board or multi-pin sockets	To separate the boards, gently rock them from side to side as you pull them apart. If the connection is very tight, use a small flat-head screwdriver - use just enough force to start.

Maintenance Precautions

The following precautions are a reminder. To avoid personal injury or damage to the computer while performing a removal and/or replacement job, take the following precautions:

1. **Don't drop it**. Perform your repairs and/or upgrades on a stable surface. If the computer falls, the case and other components could be damaged.
2. **Don't overheat it**. Note the proximity of any heating elements. Keep the computer out of direct sunlight.
3. **Avoid interference**. Note the proximity of any high capacity transformers, electric motors, and other strong magnetic fields. These can hinder proper performance and damage components and/or data. You should also monitor the position of magnetized tools (i.e. screwdrivers).
4. **Keep it dry**. This is an electrical appliance. If water or any other liquid gets into it, the computer could be badly damaged.
5. **Be careful with power**. Avoid accidental shocks, discharges or explosions.
   - Before removing or servicing any part from the computer, turn the computer off and detach any power supplies.
   - When you want to unplug the power cord or any cable/wire, be sure to disconnect it by the plug head. Do not pull on the wire.
6. **Peripherals** – Turn off and detach any peripherals.
7. **Beware of static discharge**. ICs, such as the CPU and main support chips, are vulnerable to static electricity. Before handling any part in the computer, discharge any static electricity inside the computer. When handling a printed circuit board, do not use gloves or other materials which allow static electricity buildup. We suggest that you use an anti-static wrist strap instead.
8. **Beware of corrosion**. As you perform your job, avoid touching any connector leads. Even the cleanest hands produce oils which can attract corrosive elements.
9. **Keep your work environment clean**. Tobacco smoke, dust or other air-born particulate matter is often attracted to charged surfaces, reducing performance.
10. **Keep track of the components**. When removing or replacing any part, be careful not to leave small parts, such as screws, loose inside the computer.

Power Safety Warning

Before you undertake any upgrade procedures, make sure that you have turned off the power, and disconnected all peripherals and cables (including telephone lines and power cord). It is advisable to also remove your battery in order to prevent accidentally turning the machine on.

Cleaning

Do not apply cleaner directly to the computer, use a soft clean cloth.

Do not use volatile (petroleum distillates) or abrasive cleaners on any part of the computer.

(For Computer Models Supplied with Light Blue Cleaning Cloth) Some computer models in this series come supplied with a light blue cleaning cloth. To clean the computer case with this cloth follow the instructions below.

- Power off the computer and peripherals.
- Disconnect the AC/DC adapter from the computer.
- Use a little water to dampen the cloth slightly.
- Clean the computer case with the cloth.
- Dry the computer with a dry cloth, or allow it time to dry before turning on.
- Reconnect the AC/DC adapter and turn the computer on.

Disassembly Steps

The following table lists the disassembly steps, and on which page to find the related information. **PLEASE PERFORM THE DISASSEMBLY STEPS IN THE ORDER INDICATED.**

To remove the Battery:

1. Remove the battery *page 2 - 5*

To remove the Keyboard:

1. Remove the keyboard *page 2 - 6*

To remove the HDD:

1. Remove the battery *page 2 - 5*
2. Remove the HDD *page 2 - 7*

To remove the System Memory:

1. Remove the battery *page 2 - 5*
2. Remove the HDD *page 2 - 7*
3. Remove the system memory *page 2 - 9*

To remove the M.2 SSD:

1. Remove the battery *page 2 - 5*
2. Remove the HDD *page 2 - 7*
3. Remove the SSD *page 2 - 10*

To remove the Wireless LAN Module:

1. Remove the battery *page 2 - 5*
2. Remove the HDD *page 2 - 7*
3. Remove the WLAN *page 2 - 11*

To remove the Heatsink:

1. Remove the battery *page 2 - 5*
2. Remove the HDD *page 2 - 7*
3. Remove the Heatsink *page 2 - 13*

To remove the CCD Module:

1. Remove the battery *page 2 - 5*
2. Remove the HDD *page 2 - 7*
3. Remove the CCD module *page 2 - 14*

Removing the Battery

1. Turn the computer **off**, and turn it over.
2. Slide the latch 1 in the direction of the arrow (***Figure 1a***).
3. Slide the latch 2 in the direction of the arrow.
4. While holding the latch 2, lift the battery 3 (***Figure 1b***) out of the compartment (***Figure 1c***).

a.

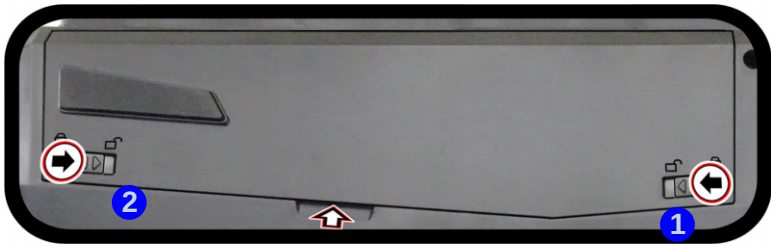

b.

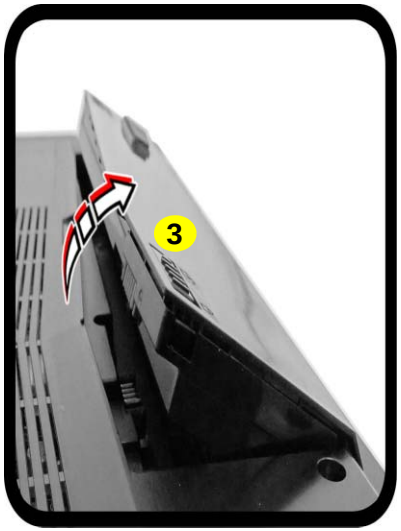

c.

Figure 1
Battery Removal

a. Slide the latch 1 in the direction of the arrow. and slide the latch 2 in the direction of the arrow.
b. Lift the battery.
c. Remove the battery.

3. Battery

Removing the Keyboard

1. Turn **off** the computer, turn it over.
2. Remove screws 1 - 2 from the bottom of the computer.
3. Open it up with the LCD on a flat surface before pressing at point 3 to release the keyboard module (use the special eject stick 4 to do this) while releasing the keyboard in the direction of the arrow 5 as shown (***Figure 2a***).
4. Carefully lift the keyboard 6 up, being careful not to bend the keyboard ribbon cable 7. Disconnect the keyboard ribbon cable 7 from the locking collar socket by using a flat-head screwdriver to pry the locking collar pins 8 away from the base (***Figure 2b***).
5. Carefully lift the keyboard 6 off the computer (***Figure 2c***).

Figure 2
Keyboard Removal

a. Remove the screws from the bottom of the computer and then eject the keyboard using a special eject stick to push the keyboard out while releasing the keyboard as shown.
b. Lift the keyboard up and disconnect the keyboard ribbon cable from the locking collar socket.
c. Remove the keyboard.

Re-inserting the Keyboard

When re-inserting the keyboard firstly, align the keyboard tabs at the bottom of the keyboard with the slots in the case.

4. Eject Stick
6. Keyboard

- 2 Screws

a.

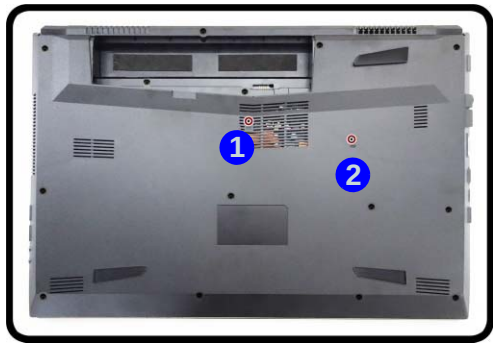

b.

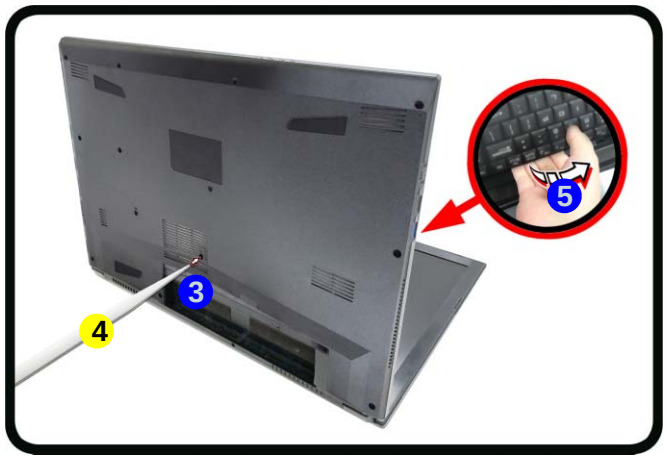

c.

Removing the Hard Disk Drive

The hard disk drive can be taken out to accommodate other 2.5" serial (SATA) hard disk drives with a height of 7mm (h). Follow your operating system's installation instructions, and install all necessary drivers and utilities (as outlined in **Chapter 4 of the User's Manual**) when setting up a new hard disk.

Hard Disk Disassembly Process

1. Turn **off** the computer, and remove the battery (*page 2 - 5*).
2. Remove the SD card cover 1 and screws 2 - 17 (*Figure 3a*).
3. Carefully push to release the bottom case 18 from point 19 and then lift it up from point 20 to release the bottom case and ports as indicated by the arrows (*Figure 3b*).
4. The HDD will be visible at point 21 on the mainboard (*Figure 3c*).

Figure 3
HDD Assembly Removal

a. Remove the SD card cover and screws.
b. Remove the bottom case.
c. Locate the HDD.

a.

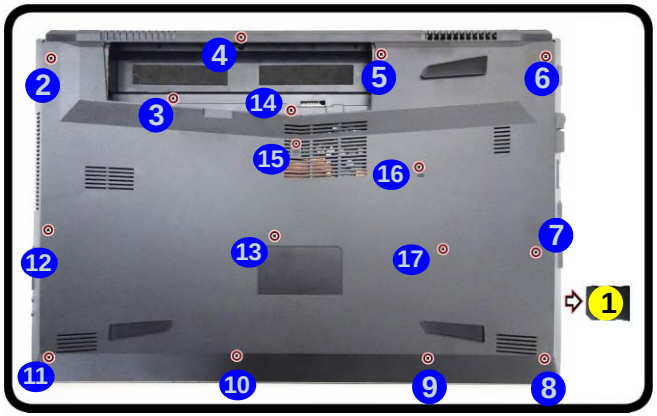

b.

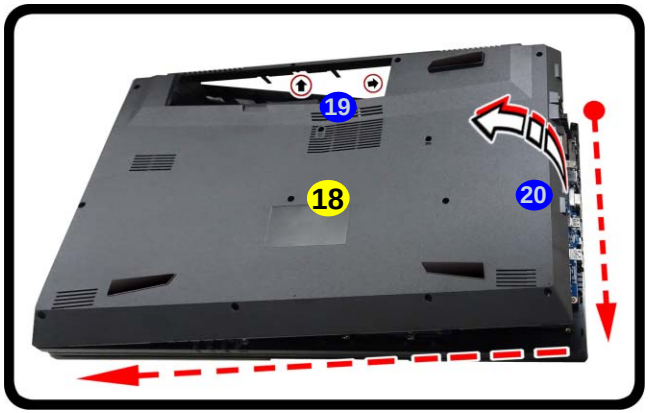

c.

Powering the Computer On

After every disassembly, make sure that the bottom case's screws are all inserted and tightened before turning the computer on.

18. Bottom Case

- 16 Screws

Figure 4
HDD Assembly Removal (cont'd.)

d. Remove the screws.
e. Slightly lift and pull the HDD in the direction of the arrow.
f. Lift the HDD assembly out of the bay.
g. Remove the screws and bracket from the HDD.

5. Remove screws 22 from the HDD assembly (***Figure 4b***).
6. Slightly lift and pull the hard disk assembly in the direction of arrow 23 (***Figure 4c***).
7. Lift the hard disk assembly 24 out of the bay 25 (***Figure 4d***).
8. Remove screws 26 - 27 and bracket 28 from the hard disk 29 (***Figure 4e***).
9. Reverse the process to install a new hard disk (do not forget to replace the screws).

d.

e.

f.

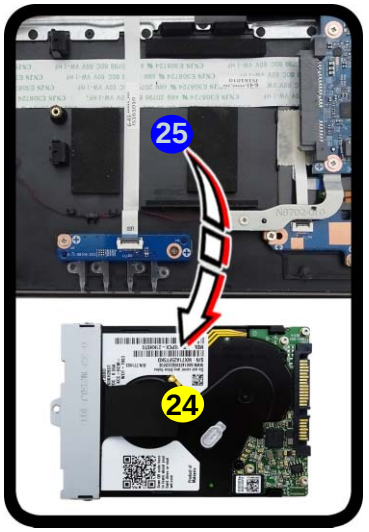

g.

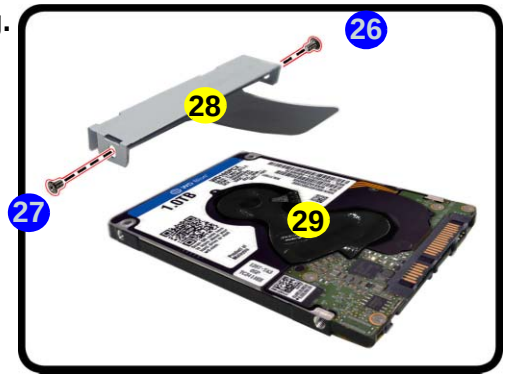

24. HDD Assembly
28. Bracket
29. HDD

- 2 Screws

HDD System Warning

New HDD's are blank. Before you begin make sure:

You have backed up any data you want to keep from your old HDD.

You have all the CD-ROMs and FDDs required to install your operating system and programs.

If you have access to the internet, download the latest application and hardware driver updates for the operating system you plan to install. Copy these to a removable medium.

Removing the System Memory (RAM)

The computer has two memory sockets for 260 pin Small Outline Dual In-line Memory Modules (SO-DIMM) supporting DDR4 2400 MHz. The main memory can be expanded up to 16GB. The total memory size is automatically detected by the POST routine once you turn on your computer.

Memory Upgrade Process

1. Turn **off** the computer, turn it over, remove the battery (*page 2 - 5*) and the bottom cover (*page 2 - 7*).
2. The RAM-2 modules will be visible at point 1 on the mainboard (*Figure 5a*).
3. Gently pull the two release latches (2 & 3) on the sides of the memory socket in the direction indicated by the arrows (*Figure 5b*). The RAM module 4 will pop-up (*Figure 5c*), and you can then remove it.
4. Pull the latches to release the second module if necessary.
5. Insert a new module holding it at about a 30° angle and fit the connectors firmly into the memory slot.
6. The module will only fit one way as defined by its pin alignment. Make sure the module is seated as far into the slot as it will go. DO NOT FORCE IT; it should fit without much pressure.
7. Press the module in and down towards the mainboard until the slot levers click into place to secure the module.
8. Replace the bottom cover and the screws (see *page 2 - 7*).
9. Restart the computer to allow the BIOS to register the new memory configuration as it starts up.

a.

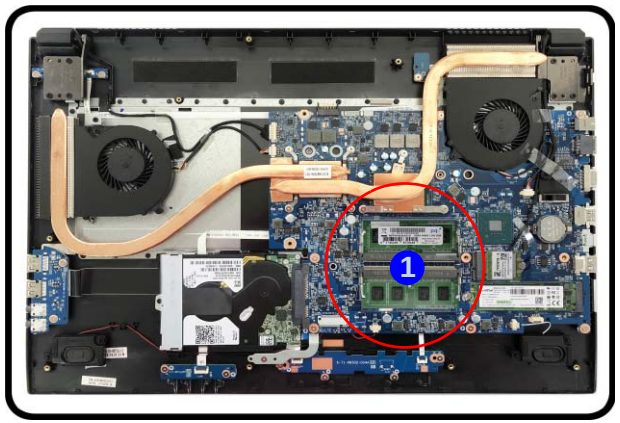

b.

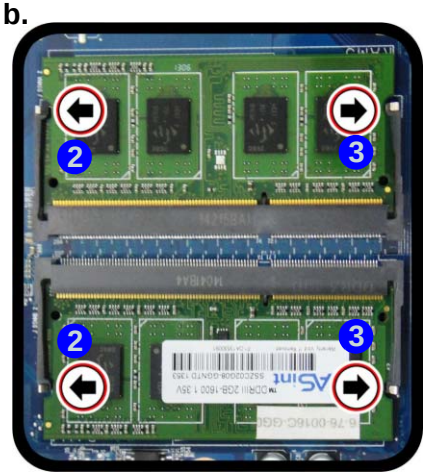

c.

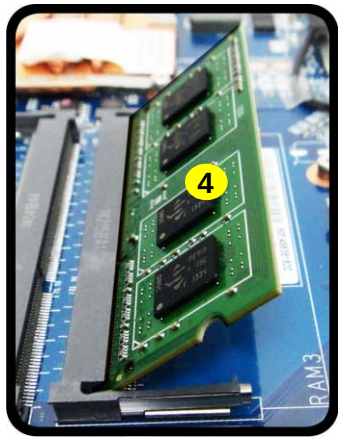

Figure 5
RAM Module Removal

a. The RAM modules will be visible at point 1 on the mainboard.
b. Pull the release latches.
c. Remove the module.

Contact Warning

Be careful not to touch the metal pins on the module's connecting edge. Even the cleanest hands have oils which can attract particles, and degrade the module's performance.

4. RAM Module

Figure 6
M.2 SSD Module Removal

a. Locate the M.2 SSD.
b. Remove the screw.
c. The M.2 SSD module will pop up.

Removing and Installing the M.2 SSD Module

M.2 SSD Module Removal Procedure

1. Turn **off** the computer, turn it over, remove the battery (***page 2 - 5***) and the bottom cover (***page 2 - 7***).
2. The M.2 SSD module will be visible at point 1 on the mainboard (***Figure 6a***).
3. Remove the screw 2 (***Figure 6b***)
4. The M.2 SSD module 3 (***Figure 6c***) will pop-up, and you can remove it from the computer.

a.

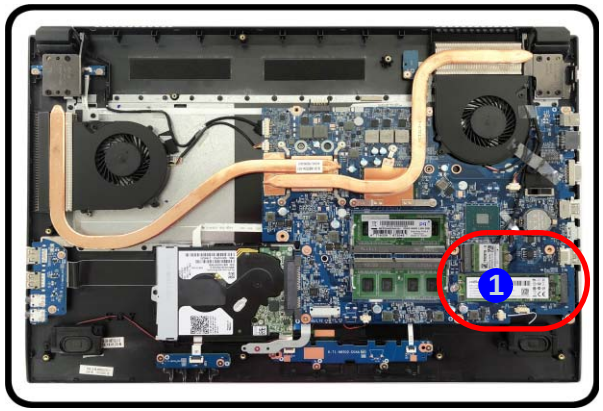

b.

c.

3.M2 SSD Module

- 1 Screw

Removing the Wireless LAN Module

1. Turn **off** the computer, turn it over, remove the battery (***page 2 - 5***) and the bottom cover (***page 2 - 7***).
2. The Wireless LAN module will be visible at point 1 on the mainboard (***Figure 7a***).
3. Carefully disconnect the cables 2 & 3, and then remove the screw 4 (***Figure 7b***)
4. The Wireless LAN module 5 (***Figure 7c***) will pop-up, and you can remove it from the computer.

a.

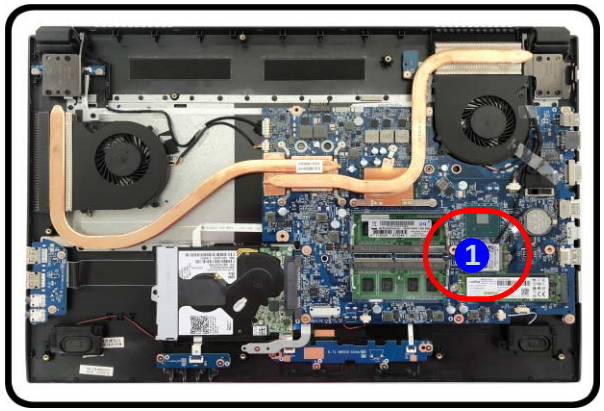

b.

c.

Figure 7
Wireless LAN Module Removal

a. Locate the WLAN.
b. Disconnect the cables and remove the screw.
c. The WLAN module will pop up.

Note: Make sure you reconnect the antenna cable to the "1 + 2" socket (***Figure 7b***).

5.Wireless LAN Module

- 1 Screw

Wireless LAN, Combo Module Cables

Note that the cables for connecting to the antennae on WLAN, WLAN & Bluetooth Combo modules are not labelled. The cables/covers (each cable will have either a black or transparent cable cover) are color coded for identification as outlined in the table below.

Module Type	Antenna Type	Cable Color	Cable Cover Type
WLAN/WLAN & Bluetooth Combo	WM 1	Black	Transparent
	WM 2	Black	White

Cable 1 is usually connected to antenna 1 (Main) on the module, and cable 2 to antenna 2 (Aux).

Removing the CPU Heat Sink

Heat Sink Removal Procedure

1. Turn **off** the computer, turn it over, remove the battery (*page 2 - 5*) and the bottom cover (*page 2 - 7*).
2. Loosen the CPU heat sink screws in the order 7, 6, 5, 4, 3, 2 & 1 (the reverse order as indicated *Figure 8a*).
3. Apply pressure to points A - C to lift carefully (it may be hot) the heat sink D off the mainboard (*Figure 8b*).

Figure 8
Heat Sink Removal

a. Remove the screws.
b. Carefully remove the heat sink unit.

a.

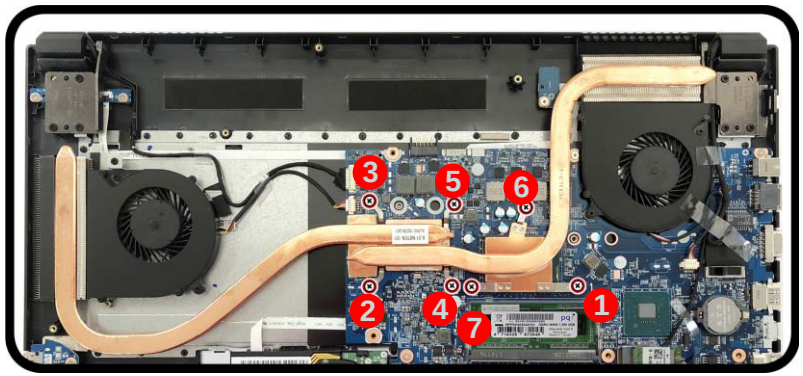

b.

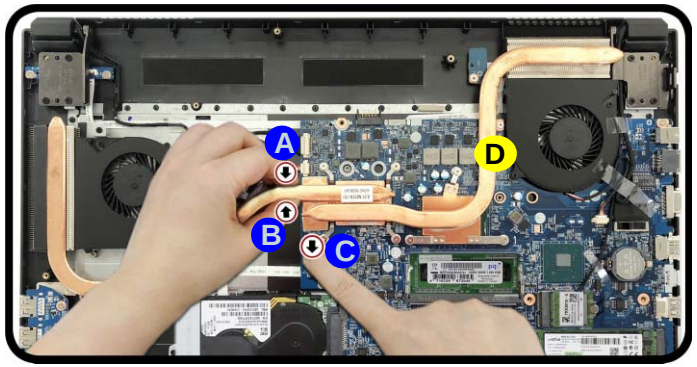

D. Heat Sink

- 7 Screws

Figure 9
CCD Removal

a. Remove rubber and screws and then carefully release the inner frame of the LCD panel at the points indicated by the arrows.
b. Remove the LCD front cover.

Removing the CCD

1. Turn **off** the computer, turn it over to remove the battery (*page 2 - 5*).
2. Lay the computer down on a flat surface with the top case up forming a 90 degree angle. Carefully remove the rubber covers 1 - 2 and screws 3 - 4.
3. Run your fingers around the inner frame of the LCD panel to lift at the upper point 5 as indicated by the arrows, and slightly push and lift up the inner frame at the middle points 6 - 7 as indicated by the arrows and then run your fingers around the inner frame at the lower point 8 as indicated by the arrows (*Figure 9a*).
4. Remove the LCD front cover 5 (*Figure 9b*).

a.

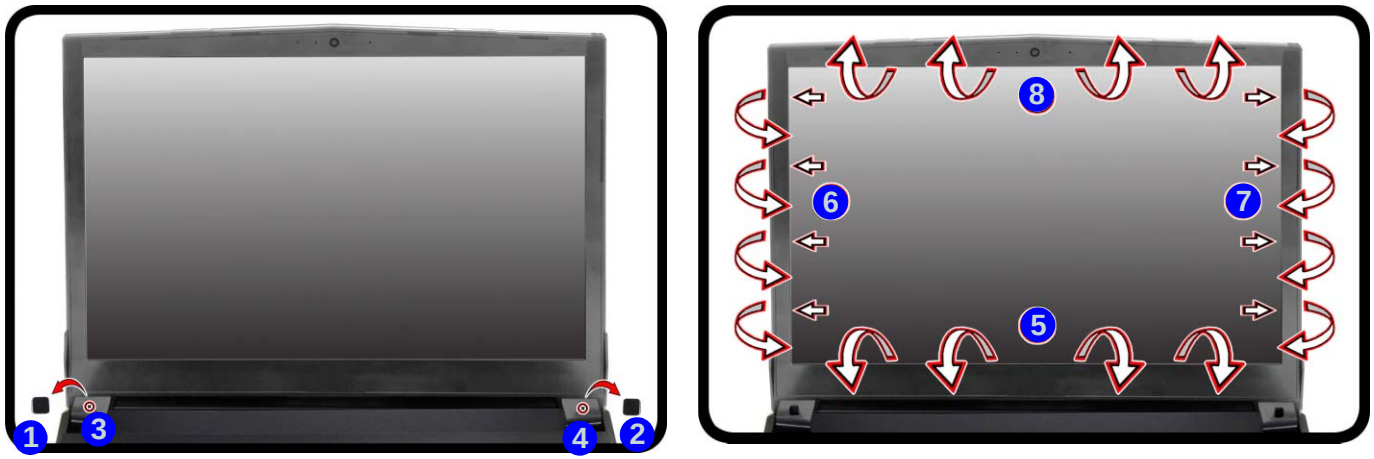

b.

9. LCD Front Cover

- 2 Screws

5. Disconnect the cable 10 (*Figure 10c*).
6. Remove the CCD module 11 (*Figure 10d*).
7. Reverse the process to install a new CCD module.

c.

d.

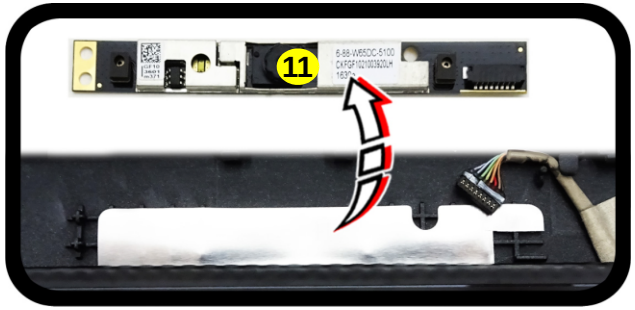

Figure 10
CCD Removal (cont'd)

c. Disconnect the cable.
d. Remove the CCD module.

11. CCD Module

Appendix A:Part Lists

This appendix breaks down the ***N870EK1 / N871EK1*** series notebook's construction into a series of illustrations. The component part numbers are indicated in the tables opposite the drawings.

Note: This section indicates the *manufacturer's* part numbers. Your organization may use a different system, so be sure to cross-check any relevant documentation.

Note: Some assemblies may have parts in common (especially screws). However, the part lists DO NOT indicate the total number of duplicated parts used.

Note: Be sure to check any update notices. The parts shown in these illustrations are appropriate for the system at the time of publication. Over the product life, some parts may be improved or re-configured, resulting in *new* part numbers.

Part List Illustration Location

The following table indicates where to find the appropriate part list illustration.

Table A - 1
Part List Illustration Location

Part	
Top	*page A - 3*
Bottom	*page A - 4*
Main Board	*page A - 5*
HDD	*page A - 6*
LCD	*page A - 7*

Top

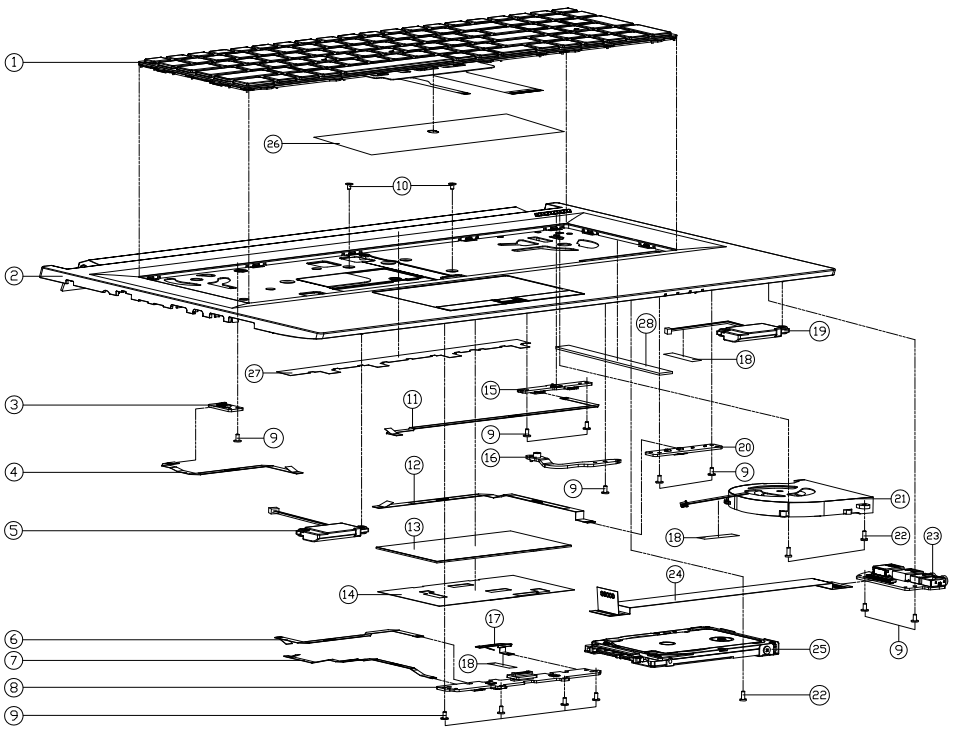

ITEM	PART NAME	PART NO	REMARK
1	MYLR 8L 10.6X8.0X0.125MM,PSA,NO MSK,BLACK,EQUATION WITH WIND KEY + A/B TAPE	6-80-N7500-012-1	
1	MYLR 8L 10.6X8.0X0.125MM,PSA,NO MSK,BLACK,EQUATION WITH WIND KEY + A/B TAPE	6-80-N8500-010-1	
2	TOP CASE MODULE W/ FPR N870HK1	6-39-N87K2-013	FOR W/FP
2	TOP CASE MODULE W/O FPR N870HK1	6-39-N87K2-022	FOR W/O FP
2	TOP CASE MODULE W/ FPR N871HK1	6-39-N87K2-111	FOR W/FP
2	TOP CASE MODULE W/O FPR N871HK1	6-39-N87K2-120	FOR W/O FP
2	TOP CASE MODULE N870HK1-Y	6-39-N87K2-022-Y	FOR W/O FP
3	HALL SENSOR BOARD V3.0A N850HC	6-77-N8501-D03A	
4	FFC HALLSENSOR TO MB 135MM 3.3V 4PIN N870HC(HT)	6-43-N8700-050	
5	SPK+CABLE L 23444 15W 4? 258M L125H2CXP (YY) NC9LU W/DD RUBBER)	6-23-5N250-1L2	
6	FFC CABLE CLICK-FPR TO MB 135MM 3V 4PIN N870HK1(HT)	6-43-N87K0-011	ONLY FOR W/ FP
7	FFC CLICK TO MB 143MM 3.3V 6PIN N870HC(HT)	6-43-N8700-010	
8	CLICK BOARD W/FP V2.0+FINGER BOARD V1.0 N870HJ1	6-77-N85HA-N02-A	FOR W/FP
8	CLICK BOARD W/O FP V2.0 N870HJ1	6-77-N85H2-D02-B	FOR W/O FP
9	SCREW M2*4L K1 NI ICT NY (DD=Ø4.5,DT=0.4)	6-35-B1120-4RE	
10	SCREW M2*3L K1 BZ ICT NY (DD=Ø4.5,DT=0.4)	6-35-B6120-3RD	
11	FFC POWER TO MB 226MM 3.3V 4PIN N870HC(HT)	6-43-N8700-041	
12	FFC LED TO MB 200MM 3V 12PIN N870HC(HT)	6-43-N8700-030	
13	TOUCH PAD SYNAPTICS TM-03163-002 P65SRS (108*65MM)	6-49-P65S3-010	
14	TOP TP MYLAR PET P775DM2	6-40-P7752-211	
15	POWER SW BOARD V3.0 N870HC	6-77-N850S-D03-B	
16	MB BRACKET (SGCC) N870HC	6-33-N8702-010	
17	FFC CLICK TO TP 55MM 3.3V 8IN N870HC(HT)	6-43-N8702-011	
18	TAPE MYLAR (C),MYLAR M550J	6-40-M55J2-030	
19	SPK+CABLE R 23444 15W 4? 258M L125H2CXP (YY) NC9LU W/DD RUBBER)	6-23-5N250-1R2	
20	LED BOARD V4.0 N870HC	6-77-N8704-D04	
21	FAN MODULE (FCN) PWM LINE-70MM N850EK1	6-31-N85J2-100	
22	SCREW M2*5L K1(T=0.8 D=4.0) BK/Z ICT NY	6-35-B6120-5R0	
23	AUDIO BOARD V1.0 N850EJ	6-77-N85J8-D01	
24	FFC AUDIO TO MB 202MM 5V 40PIN N870HC(HT)	6-43-N8700-020	
25	W/O HDD ASS'Y N870HC	6-79-N870HC0J-010	
25	W/ HDD ASS'Y N870HC	6-79-N870HC0J-020	
26	BACKLIGHT KB THERMAL(169.1*45.5) AL FOIL+3M467 NC59RC	6-47-N5507-010	
27	ALFOIL MYLAR TOP N870EK1	6-40-N8702-E10	
28	TOP VGA SIDE SPONGE 79*Ø1.15 (2R*382+6A000) N870EK1	6-47-0019A-796	

Figure A - 1
Top

Bottom

Figure A - 2
Bottom

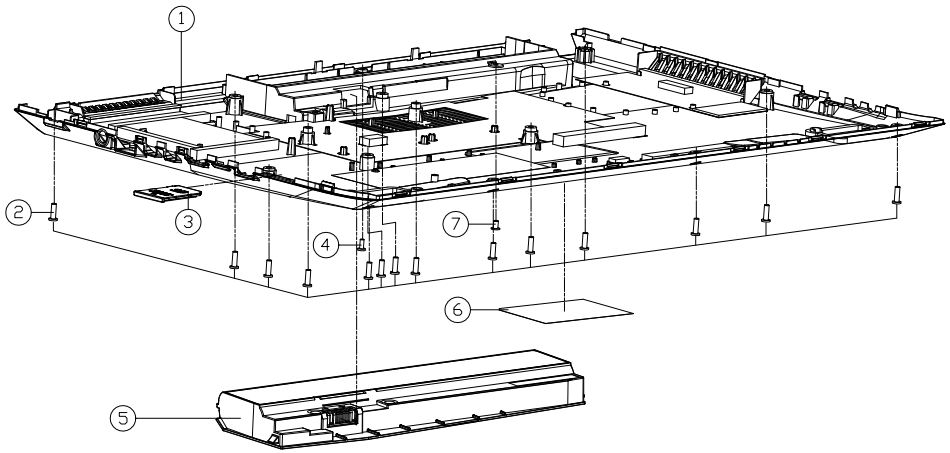

ITEM	PART NAME	PART NO	REMARK
1	BOTTOM CASE MODULE N870EK1	6-39-N8703-E10	
2	.SCREW M2.5*8L KI BK/Z NY ICT	6-35-B6125-8R0	
3	DUMMY 3DNI NON PUSH TYPE PC+ABS (C7230P-7101EX(CHANGE) W97050W	6-42-W9708-011	
4	SCREW M2*5L KI(T=0.8 D=4.0) BK/Z ICT NY	6-35-B6120-5R0	
5	BKIP S LI 10V/5.6AH/62WH 32P SHP/CIC (TEXTURE) CIC 0808CED 9987/0295F NBSHC	6-87-N850S-6E71	
5	BKIP S LI 10.8V/4.4AH/47WH 32P SHP/CIEI (TEXTURE) PSE/CCIC CIC 0808CED 9987/0295F NBSHC	6-87-N85HS-41C00	
5	BKIP S LI 10V/5.6AH/62WH 32P GETAC/SANYO (TEXTURE) CIC 5403866800E2 NBSHC	6-87-N850S-6U71	
5	BKIP S LI 10.8V/4.4AH/47WH 32P GETAC/SANYO (TEXTURE) PSE/CCIC 5403866800E1 NBSHC	6-87-N850S-4U41	
5	BKIP S LI 10V/5.6AH/62WH 32P SHP/CIC (TEXTURE) CIC 0808CED 9987/0295F NBSHC LABEL CHANGE	6-87-N850S-6E72	
6	PRODUCT LABEL FOR N870EJ1	6-45-N870EJ13-010	
6	PRODUCT LABEL FOR N870EK1	6-45-N870EK13-010	
6	PRODUCT LABEL FOR N871EJ1	6-45-N871EJ13-010	
6	PRODUCT LABEL FOR N871EK1	6-45-N871EK13-010	
6	PRODUCT LABEL FOR N870EK1-Y	6-45-N870EK1Y-010	
6	PRODUCT LABEL FOR N870EJ1-Y	6-45-N870EJ1Y-010	
7	.SCREW M2*4L KI NI ICT NY (DD=Φ4.5,DT=0.4)	6-35-B1120-4RE	

Main Board

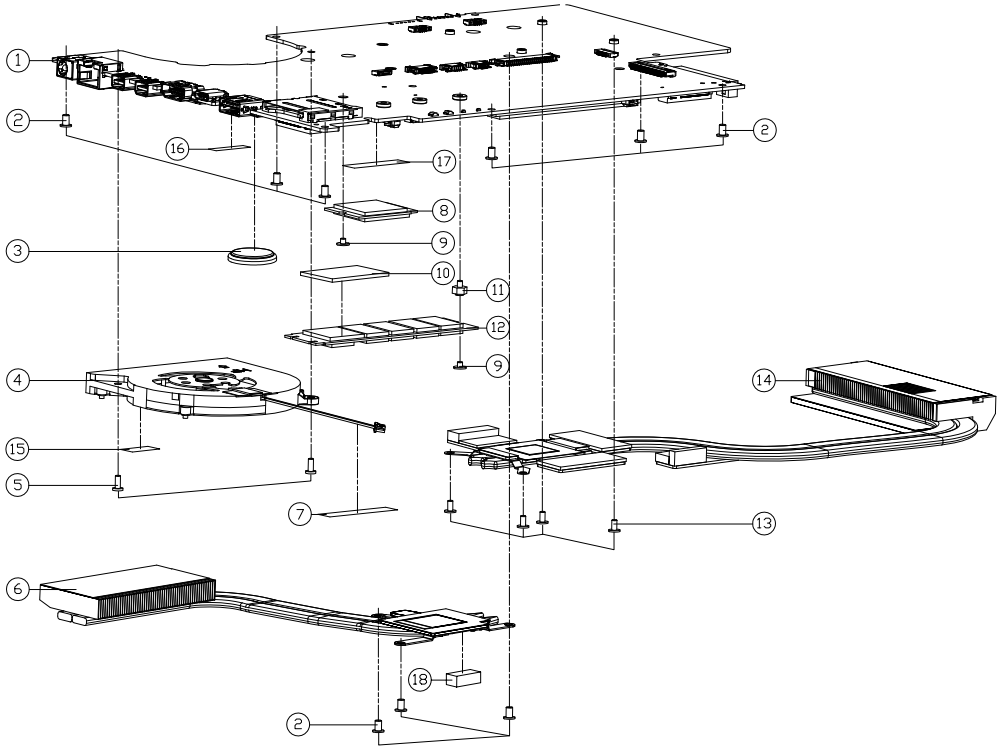

ITEM	PART NAME	PART NO	REMARK
1	MAIN BOARD(CPU/I7-8750H/2.2G) V2.0 (EIPXV/TPM) N870EK1	6-77-N870EK10-D02-C	
1	MAIN BOARD(CPU/I7-8750H/2.2G) V2.0 (EIPXV/D TPM) N870EK1	6-77-N870EK10-D02-1C	
1	MAIN BOARD(CPU/I5-8300H/2.3G) V2.0 (EIPXV/D TPM) N870EK1	6-77-N870EK10-D02-1D	
1	MAIN BOARD(CPU/I5-8300H/2.3G) V2.0 (EIPXV/TPM) N870EK1	6-77-N870EK10-D02-D	
1	MAIN BOARD(CPU/I7-8750H/2.2G) V2.0 (EIPXV/TPM) N870EJ1	6-77-N870EJ10-D02-C	
1	MAIN BOARD(CPU/I7-8750H/2.2G) V2.0 (EIPXV/D TPM) N870EJ1	6-77-N870EJ10-D02-1C	
1	MAIN BOARD(CPU/I5-8300H/2.3G) V2.0 (EIPXV/D TPM) N870EJ1	6-77-N870EJ10-D02-1D	
1	MAIN BOARD(CPU/I5-8300H/2.3G) V2.0 (EIPXV/TPM) N870EJ1	6-77-N870EJ10-D02-D	
2	.SCREW M2.5*4L KI NI ICT NY	6-35-21125-4R0	
3	BATTERY 3V 220MA BBBCR2032B (KTS)	6-23-6A2B2-030	
4	CPU FAN MODULE(FORCECOND PWM CONTROL N750WU	6-31-N75W2-101	
5	SCREW M2*5L KI(T=0.8 D=4.0) BK/Z ICT NY	6-35-B6120-5R0	
6	HEATSINK MODULE CPU45W N870EK1	6-31-N870N-EA0	
7	TAPE MYLAR (A),MYLAR M550J	6-40-M55J2-010	
8	WLAN+BT COMBO DUAL BAND INTEL 9560V PCIM 2X2AW+BT VPRO 2X2 IC+BT DT+2 M2 2230 P65SF	6-88-P65SF-4210	OPTION
8	WLAN+BT COMBO DUAL BAND INTEL TRIBEER PCIM 2 9560AW+BT VPRO 2X2 IC+BT DT+2 M2 2230 P75FF	6-88-P75FF-4210	OPTION
8	WLAN+BT COMBO INTEL WIRELESS-AC 3165 (CEDAR PEAK 1), 2T 2C + BT 3165NGWB M2(E M2 2230 N240U	6-88-N240F-4200	OPTION
8	WLAN+BT COMBO DUAL BAND INTEL ,STONEPEAK PCIM 2 9560AW+BT VPRO 2X2 IC+BT DT+2 M2 2230 N24F	6-88-N24GF-4220	OPTION
9	SCREW M2*2L KI NI ICT NY (DD=Φ5 ,T=0.5)	6-35-B1120-2R0	
10	THERMAL PAD RS300 (30*20*2.75TWM FOR M.2 SSD N850HC	6-48-N850S-010	
11	SCREW M2*2.5L (H=2.5 D=5) STEEL ICT NY FOR NGFF CARD(CHANGE)	6-35-ZA120-2R5-1	
12	SSD M2 2280 [illegible] SAMSUNG MZVLB512HAJQ-00000 (PM981) PCIE GEN3 3D TLC 64 LAYER	6-85-D511T-S00	OPTION
12	SSD M2 2280 512GB SAMSUNG MZVLB512HAJQ-00000 (PM981) PCIE GEN4 3D TLC 64 LAYERS	6-85-D515B-S08	OPTION
12	SSD M2 2280 512GB INTEL SSDPEKKA512G7 (660P) PCIE GEN4 3D TLC FWP3310C	6-85-D515B-Z00	OPTION
12	SSD M2 2280 256GB WESTERN MTFDHAX256TCH (SBX) SATA3 WESTERN 3D TLC 64 LAYERS	6-85-D51R6-101	OPTION
12	SSD M2 2280 256GB PHISON ESM256GBTC2-32 (SD) SATA3 (TOSHIBA 3D TLC 64 LAYERS) FW3A7B1	6-85-D51R6-H04	OPTION
12	SSD M.2 2280 ITR1000GCD) INTEL SSDSCKKW000X6 (540S) SATA3	6-85-D511T-Z00	OPTION
12	SSD M2 2280 1TB INTEL 760P(SSDPEKNW010T8X1) QLC PCIE GEN3 3D NAND	6-85-D5116-Z02	OPTION
13	.SCREW M2*4L KI NI ICT NY (DD=Φ4.5,DT=0.4)	6-35-B1120-4RE	
14	VGA&SW HEATSINK MODULE N870HK1 (2 HEAT PIPE 20 ANGLED)	6-31-N87K2-201	FOR DOUBLE PIPE
15	TAPE MYLAR TRANSPARENT (20*10*0.05) P180HM	6-40-P1803-020	
16	TAPE MYLAR TRANSPARENT (30*5*0.05) W25HPQ	6-40-W25P3-010	
17	TAPE MYLAR (C),MYLAR M550J	6-40-M55J2-030	
18	RUBBER (L12*W5*H7.15) W25AHS	6-47-W25S2-020	

Figure A - 3
Main Board

HDD

Figure A - 4
HDD

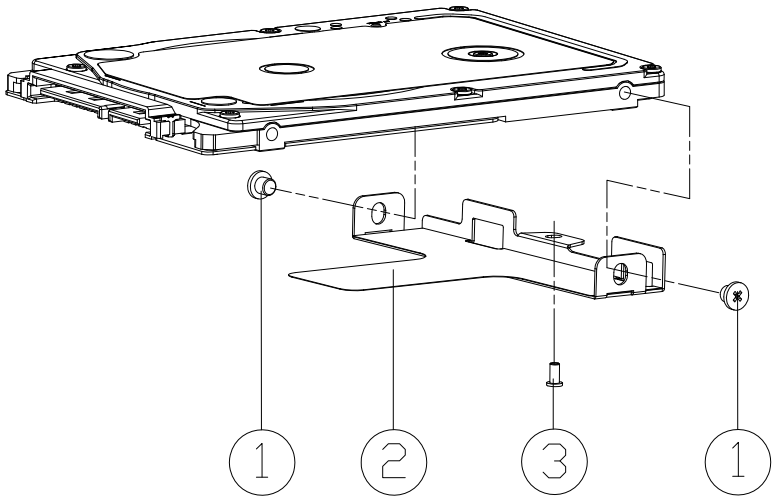

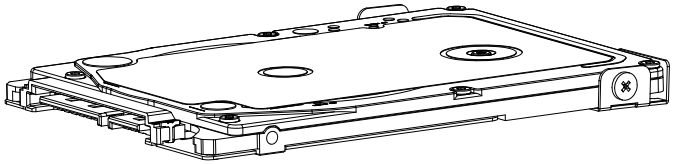

ITEM	PART NAME	PART NO	REMARK
1	SCREW M3*2.5L KI NI ICT NY	6-35-B1130-2R5	
2	HDD BKT 7MM SECC T=0.5 N250LU	6-33-N250J-011	
3	SCREW M2*5L KI(T=0.8 D=4.0) BK/Z ICT NY	6-35-B6120-5R0	

LCD

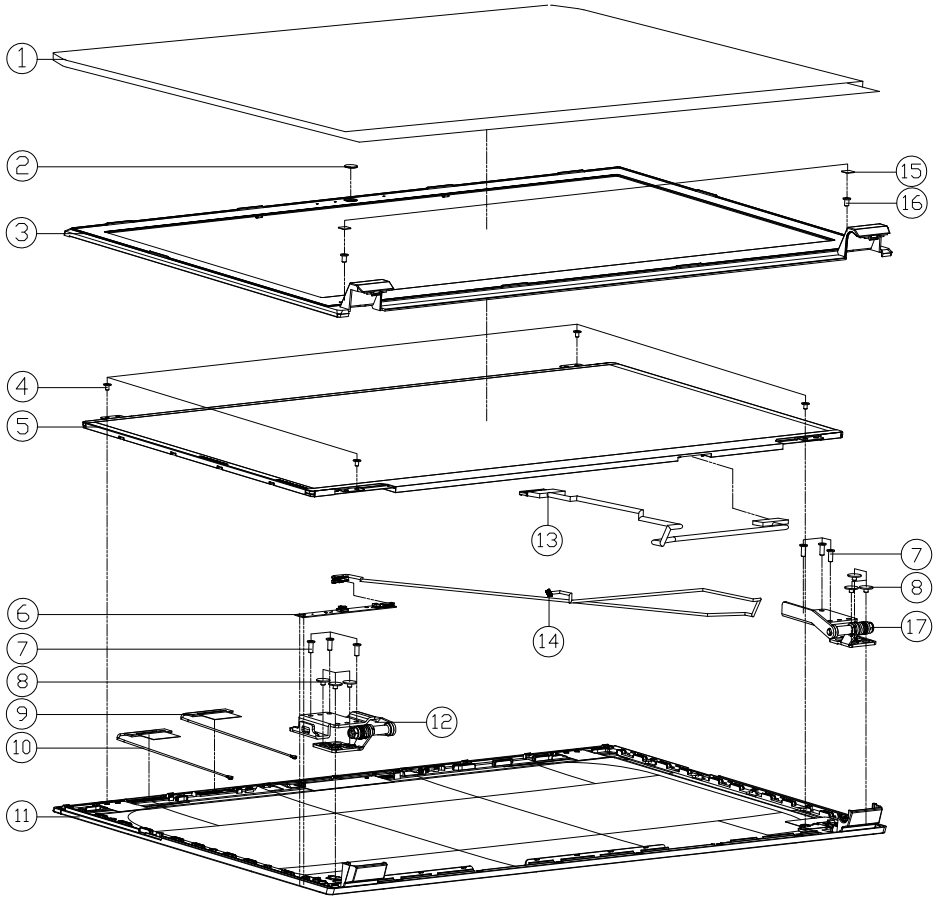

ITEM	PART NAME	PART NO	REMARK
1	BOPP MYLAR 272*437*T=0.05 FOR P670RS	6-40-P67S1-010	
2	LCD CCD LENS PMMA P177SM (SINTOYO)	6-42-P177T-010-2	
3	FRONT COVER MODULE N870HC	6-39-N8701-012	
4	SCREW M2*3L KI BZ ICT NY (DD=Ø4.5,DT=0.4)	6-35-B6120-3RD	
4	SCREW M2*3L KI CZ ICT NY (D=Ø4.5,DT=0.6,LADDER=1.0)	6-35-B3120-3R0	FOR 6-50-N1240-G00 6-50-NBB40-G040
5	LCD 17.3" FHD/ AAS / N17/EDP INNOLUX N173HCE-E31 (LED) 40 PIN	6-50-NB240-V00	
5	LCD 17.3" HD+/ EDP AU B173RTN02.1 (LED) 40PIN	6-50-NA140-G00	
5	LCD 17.3" HD+/ EDP INNOLUX N173FGA-E34(LED) 40PIN	6-50-NA140-V00	
5	LCD 17.3" UHD / IPS /5V 6-STRC/NON GT/ EDP AU B173ZAN01.2(F SUPPORT 5V) 6-STRC" LED 40PIN	6-50-N1240-G00	
5	LCD 17.3" FHD / IPS /5V 6-STRC/NON GT/ EDP LG LP173WF4-SPF5 (EDDIDS) LED 40PIN	6-50-NBB40-L080	
5	LCD 17.3" FHD / IPS /5V 6-STRC/NON GT/ EDP LG LP173WF4-SPF5 (EDDIDS) LED 40PIN	6-50-NBB40-L081	
5	LCD 17.3" FHD/(2592/N9/2RS/NON GT/EDP INNOLUX N173HHE-G32 (LED) 40 PIN	6-50-NBB40-V070	
5	LCD 17.3" FHD/WVA/N7/NON GT/EDP BOE NV173FHM-N41 (LED) 40 PIN (FG CODE:8940)	6-50-NBB40-Z021	
5	LCD 17.3" FHD/WVA/N7/NON GT/EDP INNOLUX N173HCE-E31 (LED) 40 PIN	6-50-NBB40-V020	
5	LCD 17.3" FHD/(2592/N9/2RS/NON GT/EDP INNOLUX N173HHE-G32 (WVACD) LED 40 PIN	6-50-NBB40-V072	
5	LCD 17.3" FHD/WVA/3482/WSR 6-STRC/N7/NON GT/EDP AU B173HAN02.1 LED 40PIN	6-50-NBB40-G040	
6	WC CAMERA CHICONY FIX CHF88C8028EB2-2R FHD (1X2.9) W/SUBC FIXED W/WHITE-LED W/O-MIC	6-88-W65DC-5110	OPTION
6	WC CAMERA CHICONY FIX CHF88C8028EB2-1R HD (1X2.9) W/SUBC FIXED W/WHITE-LED W/O-MIC	6-88-W51PC-5100	OPTION
6	WC CAMERA ICSON FIX (HD/WSTR-3H) 1R HD HYNIX H2BS W/SUBC FIXED W/WHITE-LED W/O-MIC	6-88-N650C-4910	OPTION
6	WC CAMERA CHICONY FIX CHF88C8028EB2-2R FHD (1X2.9) W/SUBC FIXED W/WHITE-LED W/O-MIC	6-88-W65DC-5100	OPTION
6	WC CAMERA ICSON FIX (HD/WSTR-2H) 2R FHD (1X2.9) P77SCH FIXED W/WHITE-LED W/O-MIC	6-88-P775C-4901	OPTION
6	WC CAMERA ICSON FIX(HD) (HD/WSTR-1H) 1R HD HYNIX H2TWH FIXED W/WHITE-LED W/O-MIC	6-88-N770C-4910	OPTION
6	WC CAMERA CHICONY FIX CHF88C8028EB2-1R HD (1X2.9) W/SUBC FIXED W/WHITE-LED W/O-MIC	6-88-W51PC-5110	OPTION
6	WC CAMERA ICSON FIX (HD/WSTR-3H) 1R HD HYNIX H2BS W/SUBC FIXED W/WHITE-LED W/O-MIC	6-88-N650C-4900	OPTION
7	.SCREW M2.5*8L KI BK/Z NY ICT	6-35-B6125-8R0	
8	SCREW M2.5*2.5L KI BK/Z ICT NY(Ø8,T=0.6)	6-35-B6125-2R5	
9	ANTENNA 1PEX4 WLAN WGT WL1 PCB AL 2.4G/5GHZ WL1=600MM P870DM	6-23-7P870-010	
10	ANTENNA 1PEX4 WLAN WGT WL-2 PCB AL 2.4G/5G WL-2= 530MM P640RE	6-23-7P640-020	
11	BACK COVER MODULE N870HC	6-39-N8701-023	
11	BACK COVER MODULE N871HC	6-39-N8711-021	
12	HINGE L (SECC) N870HC	6-33-N8701-0L0	
13	WIRE CABLE FOR EDP 45MM 15V 30PIN (D-0.81/A/V CONDUCTOR)BROWN N870HC	6-43-N8701-010-2N	
13	WIRE CABLE FOR EDP 4L 45MM 15V 30PIN (D-0.81/A/V CONN:HRS(40-22-HF) N87K1	6-43-N87K1-010-1N	
13	WIRE CABLE FOR EDP 4L 45MM 15V 30PIN (D-0.81/A/V CONN:HRS(40-22-HF) N87P1	6-43-N87P1-010-1N	
14	WIRE CABLE FOR CCD D-MIC 700MM 3.3V 8P (HT) N870HC	6-43-N870T-010-2	
15	FRONT COVER SCREW MYLAR PC P750ZM	6-40-P7508-030	
16	.SCREW M2.5*4L KI NI ICT NY	6-35-21125-4R0	
17	HINGE R (SECC) N870HC	6-33-N8701-0R0	

Figure A - 5
LCD

Appendix B: Schematic Diagrams

This appendix has circuit diagrams of the ***N870EK1 / N871EK1*** notebook's PCB's. The following table indicates where to find the appropriate schematic diagram.

Diagram - Page	Diagram - Page	Diagram - Page
System Block Diagram - Page B - 2	*PCH 1/9 - Page B - 25*	*VCC_Core & VCCGT - Page B - 48*
Processor 1/6 - Page B - 3	*PCH 2/9 - Page B - 26*	*1.0DX_VCCSTG/VCCSFR_OC, 3.3VA - Page B - 49*
Processor 2/6 - Page B - 4	*PCH 3/9 - Page B - 27*	*VCCSA - Page B - 50*
Processor 3/6 - Page B - 5	*PCH 4/9 - Page B - 28*	*AC_In, Charger - Page B - 51*
Processor 4/6 - Page B - 6	*PCH 5/9 - Page B - 29*	*NVVDD - Page B - 52*
Processor 5/6 - Page B - 7	*PCH 6/9 - Page B - 30*	*FBVDDQ - Page B - 53*
Processor 6/6 - Page B - 8	*PCH 7/9 - Page B - 31*	*PEX_VDD/3V3/1.8V - Page B - 54*
DDR4 CHA SO-DIMM - Page B - 9	*PCH 8/9 - Page B - 32*	*Audio Board - Page B - 55*
DDR4 CHB SO-DIMM - Page B - 10	*PCH 9/9 - Page B - 33*	*Power Switch Board - Page B - 56*
VGA PCI-E Interface - Page B - 11	*M.2 3G Card - Page B - 34*	*Hall Sensor Board - Page B - 57*
VGA Frame Buffer Interface - Page B - 12	*M.2 WLAN+BT, SSD - Page B - 35*	*Click Board - Page B - 58*
VGA Frame Buffer A - Page B - 13	*USB Conn, USB Charger - Page B - 36*	*LED Board - Page B - 59*
VGA Frame Buffer A - Page B - 14	*Card Reader / LAN RTL8411B - Page B - 37*	*Finger Print Board - Page B - 60*
VGA Frame Buffer B - Page B - 15	*HDD, Click TP, Audio, Hall Con. - Page B - 38*	*Power Sequence - Page B - 61*
VGA Frame Buffer B - Page B - 16	*LED, CCD, TPM, Power SW Con. - Page B - 39*	
VGA I/O - Page B - 17	*Audio Codec ALC269 VC2 - Page B - 40*	
NVIDIA Power Sequence - Page B - 18	*KBC-ITE IT8587 - Page B - 41*	
NVIDIA GPIO Level Shift - Page B - 19	*RGB KB Only - Page B - 42*	
VGA NVVDD Coupling - Page B - 20	*5V, 5VS, 3.3V, 3.3VS, 3.3VA - Page B - 43*	
MDP - Page B - 21	*VDD1.0V, VCCIO - Page B - 44*	
MDP - Page B - 22	*VDD3, VDD5 - Page B - 45*	
Panel, Inverter - Page B - 23	*DDR 1.2V / 0.6VS, 2.5V - Page B - 46*	
HDMI - Page B - 24	*VCore, VCCGT Output Stage - Page B - 47*	

Table B - 1
SCHEMATIC DIAGRAMS

Version Note

The schematic diagrams in this chapter are based upon version 6-7P-N85J7-002-1. If your mainboard (or other boards) are a later version, please check with the Service Center for updated diagrams (if required).

System Block Diagram

Sheet 1 of 60
System Block Diagram

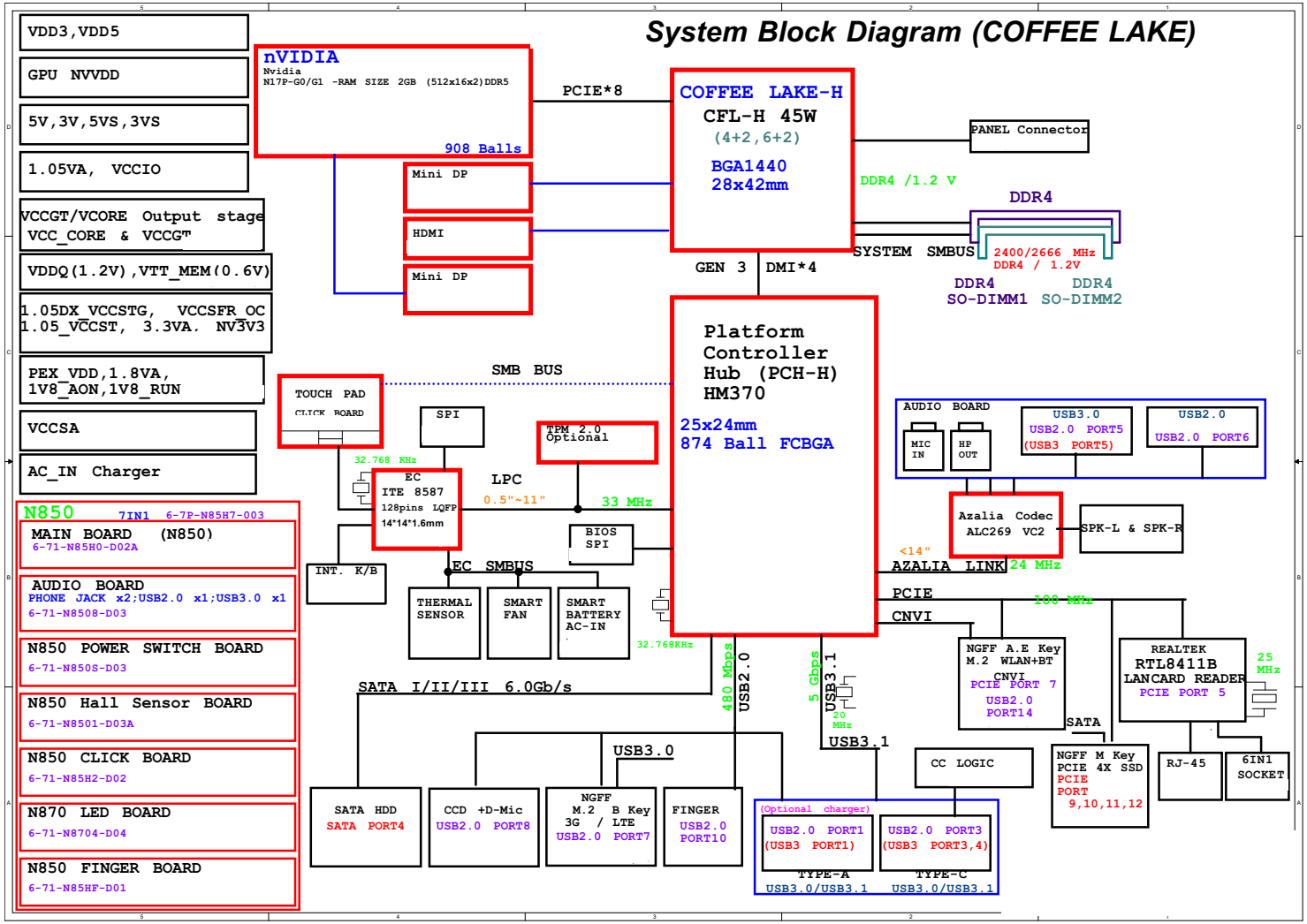

Processor 1/6

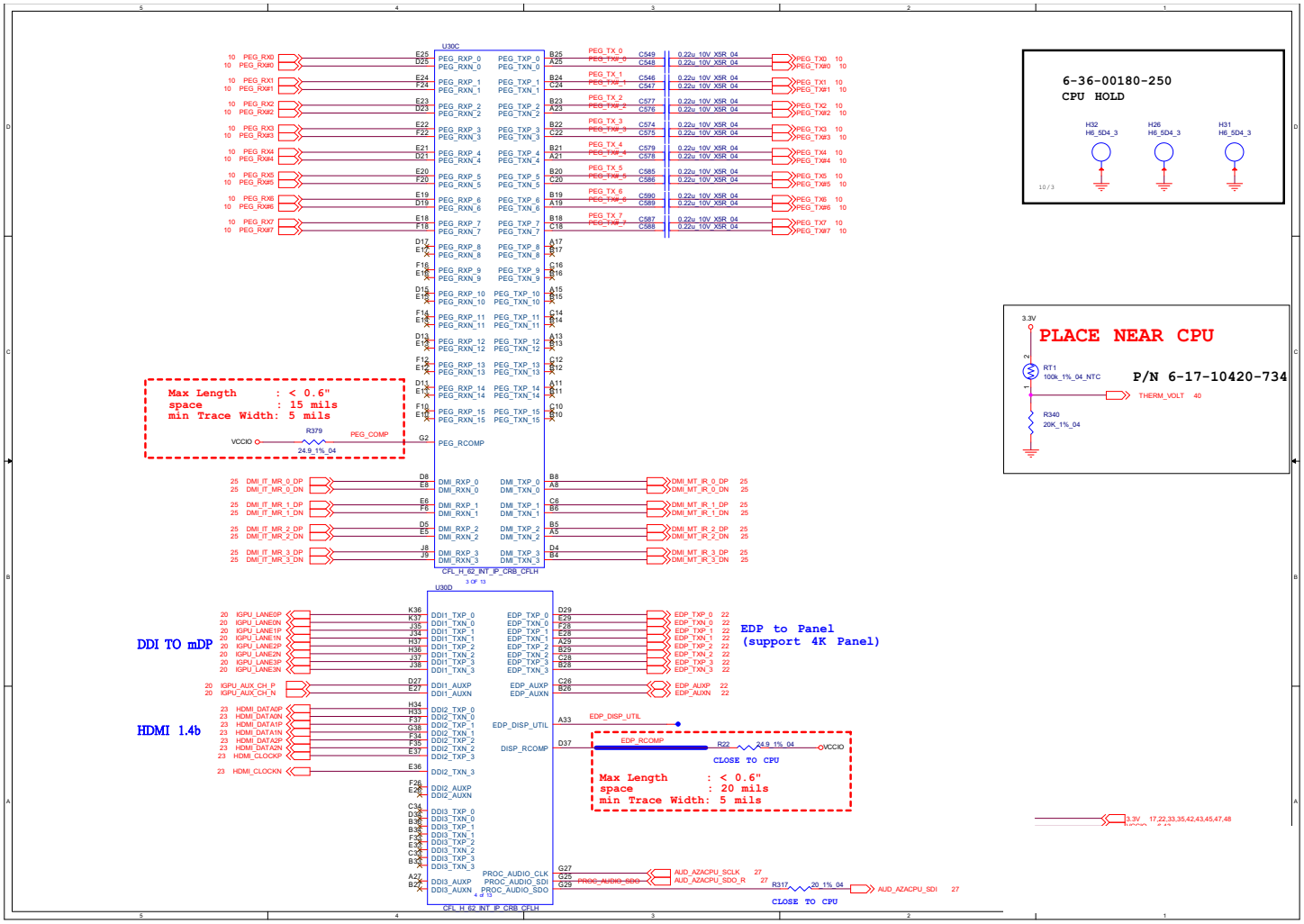

Sheet 2 of 60
Processor 1/6

Processor 2/6

Sheet 3 of 60
Processor 2/6

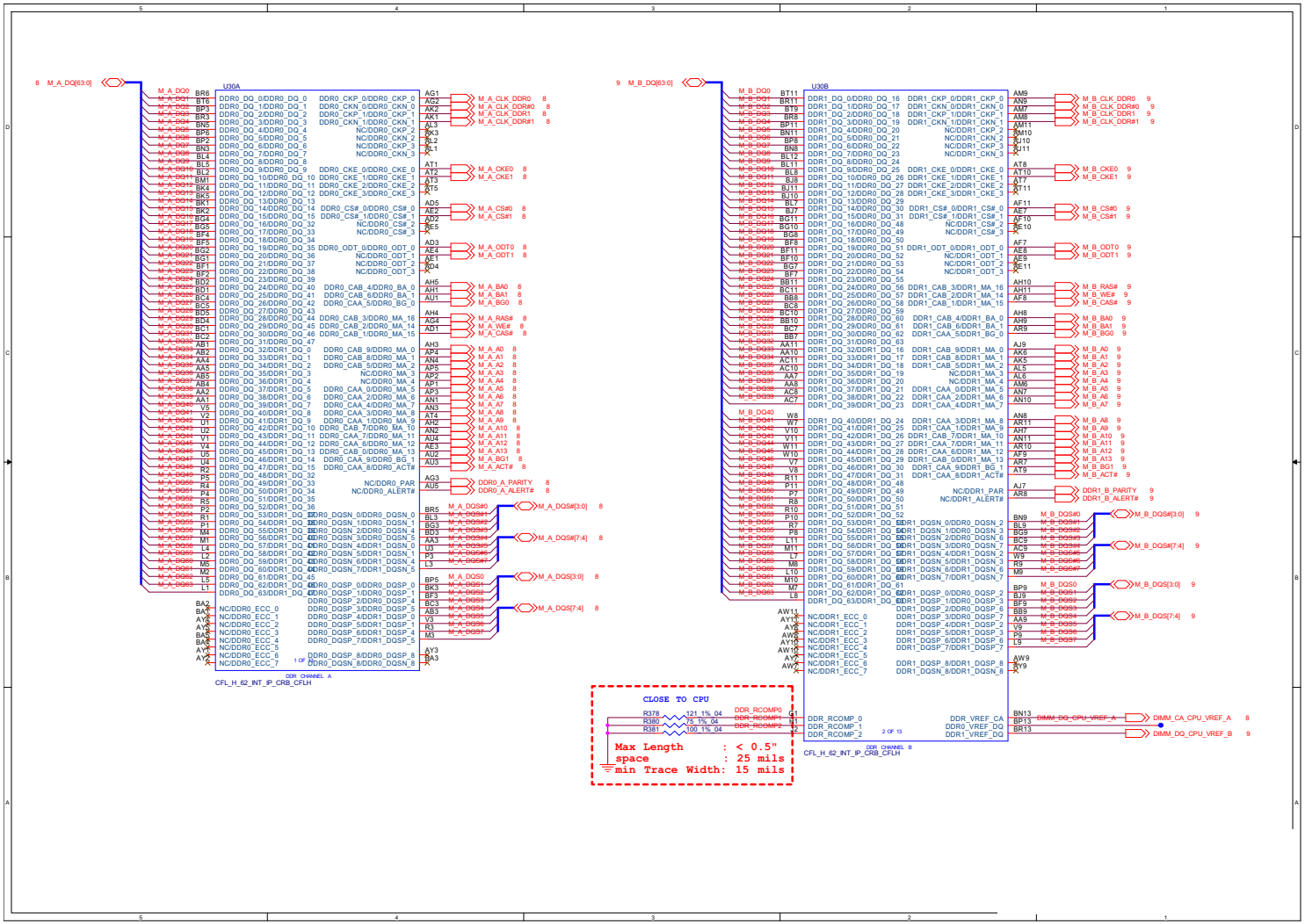

Processor 3/6

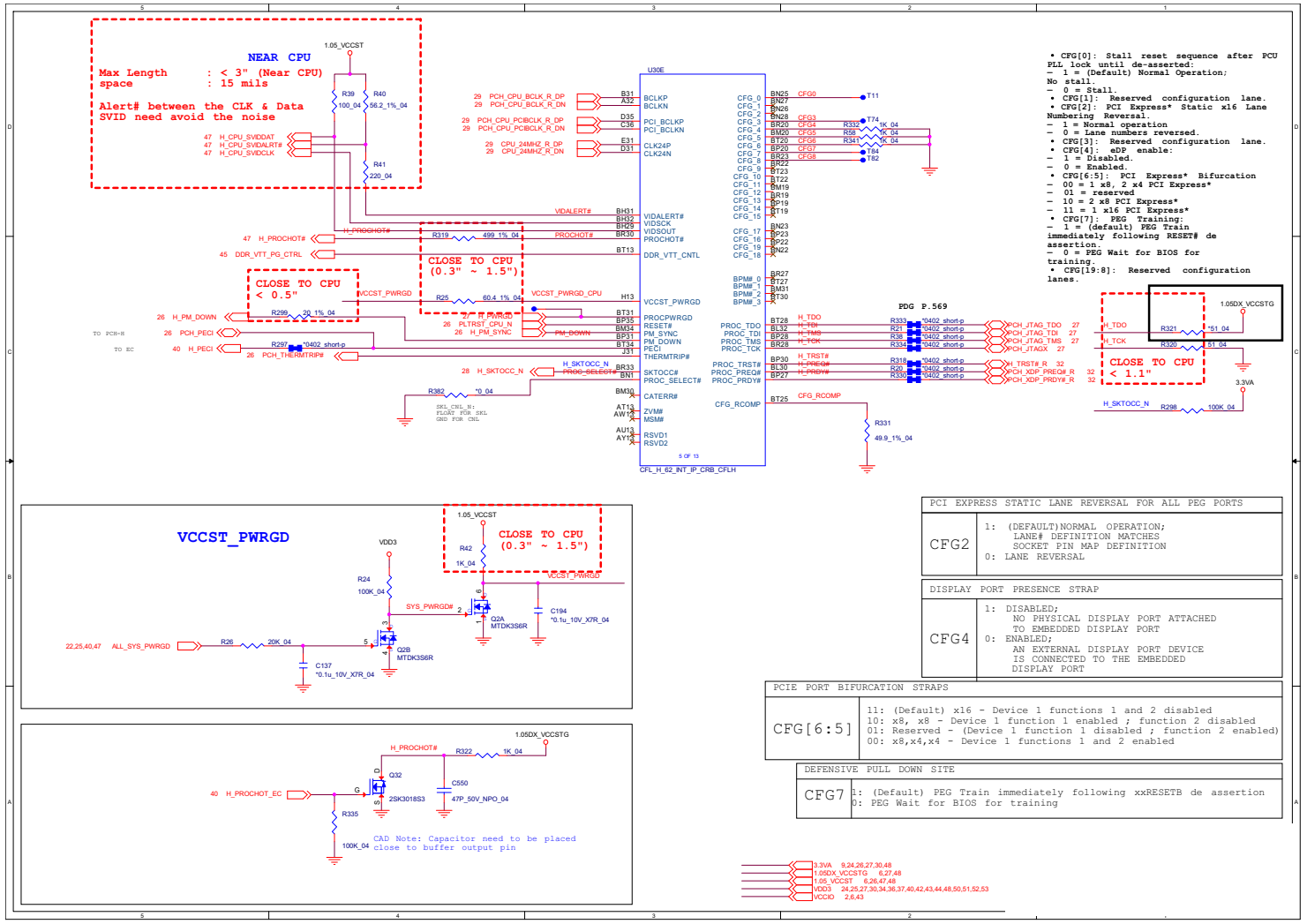

Sheet 4 of 60
Processor 3/6

Processor 4/6

Sheet 5 of 60
Processor 4/6

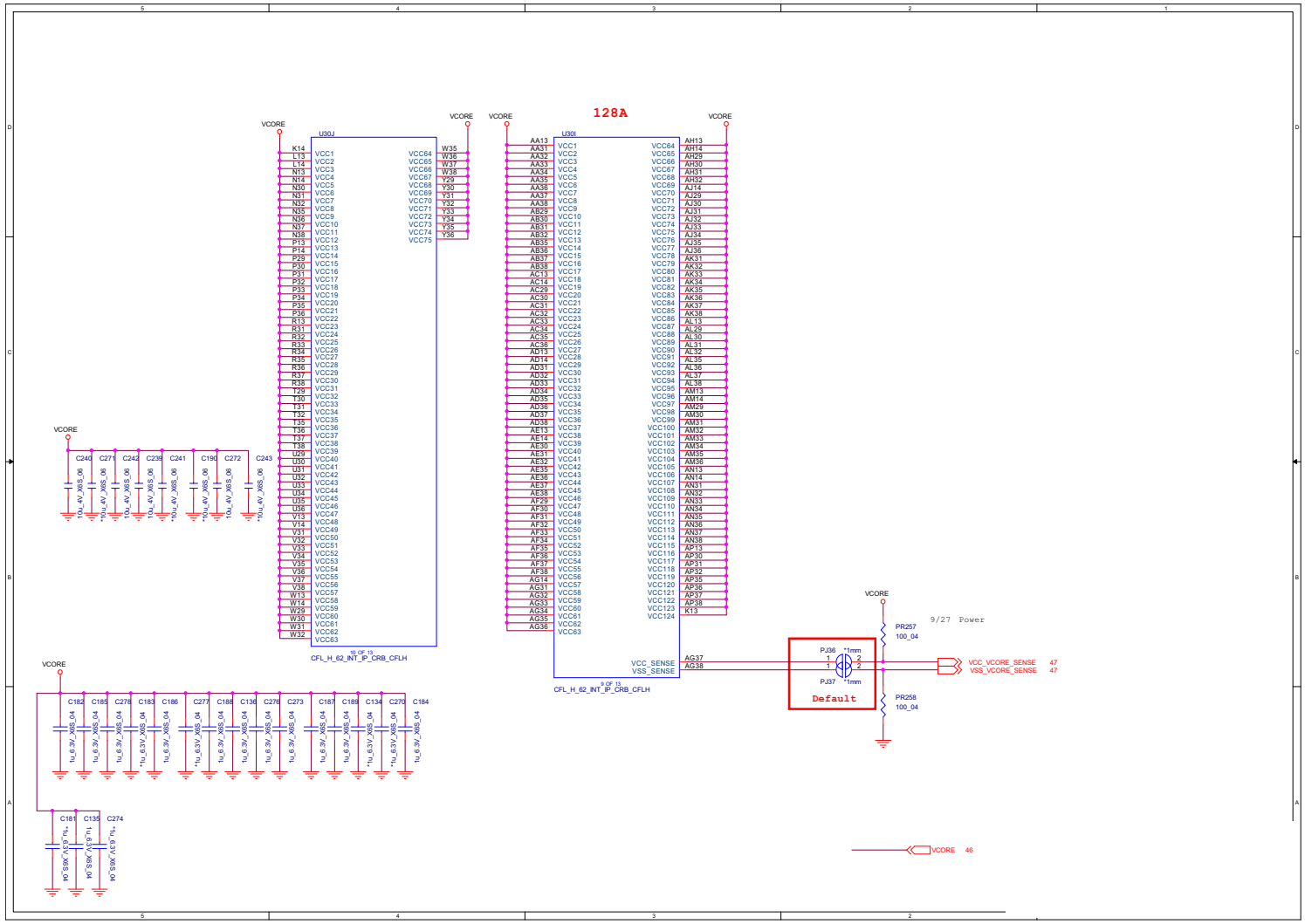

Processor 5/6

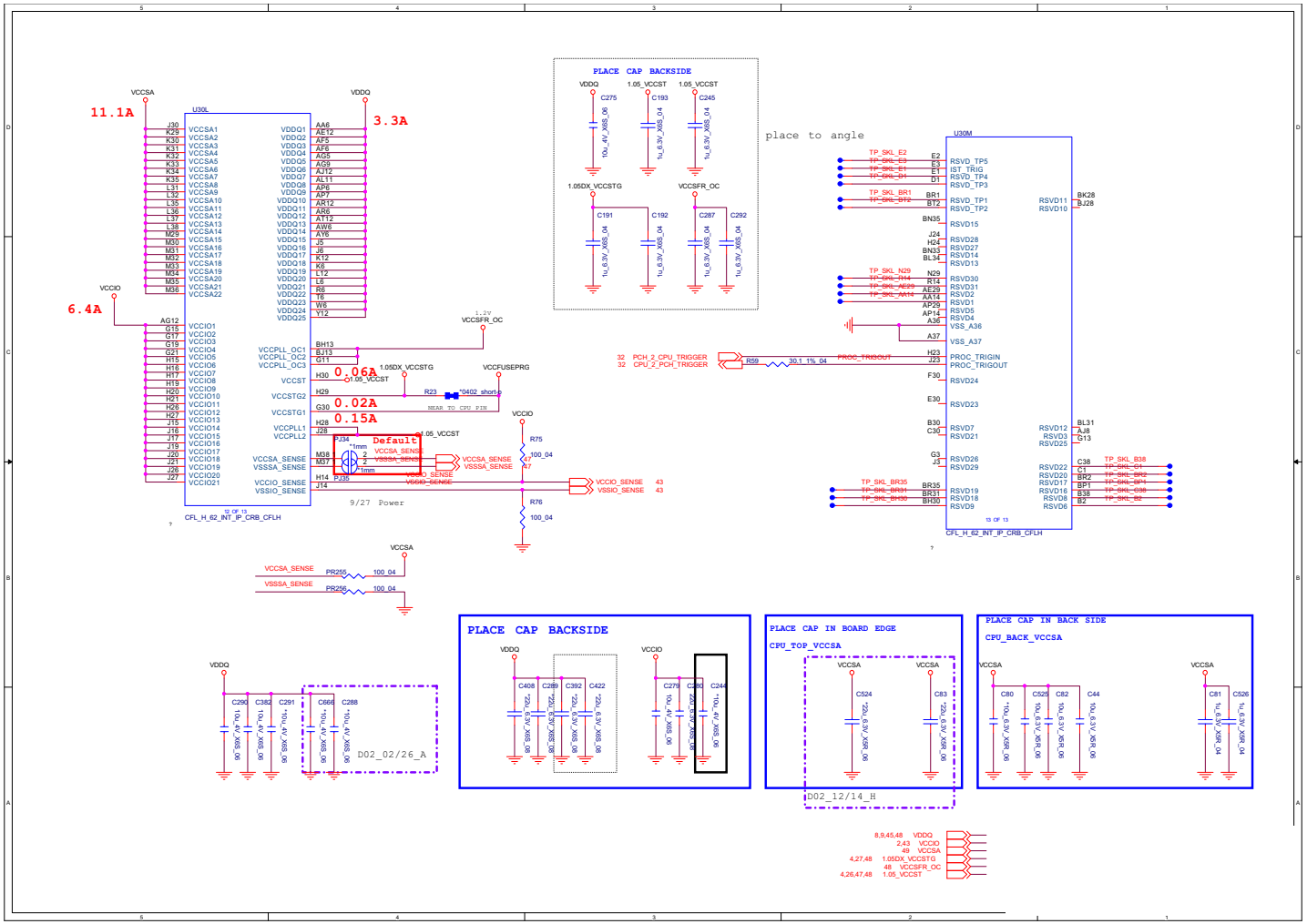

Sheet 6 of 60
Processor 5/6

Processor 6/6

Sheet 7 of 60
Processor 6/6

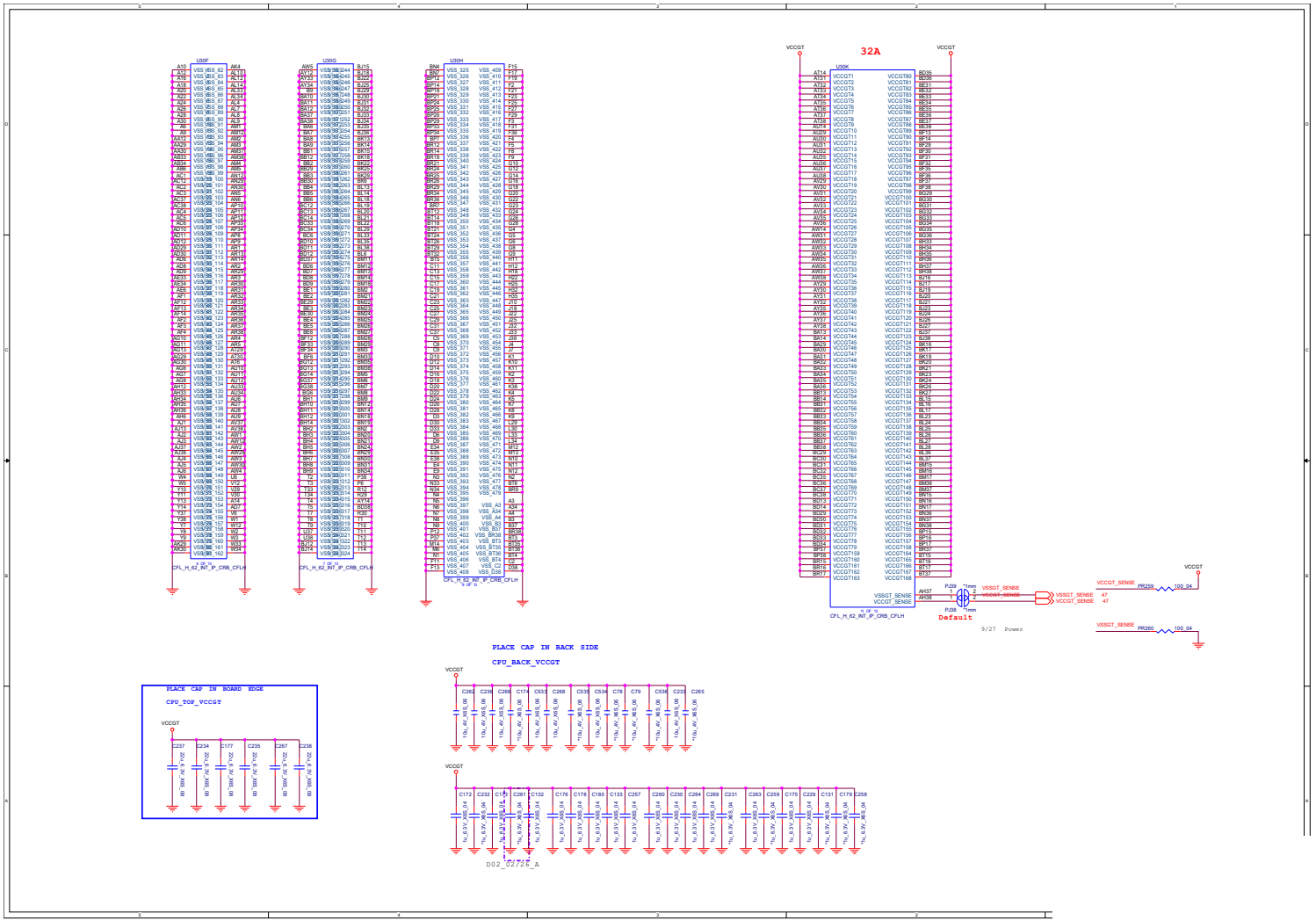

DDR4 CHA SO-DIMM

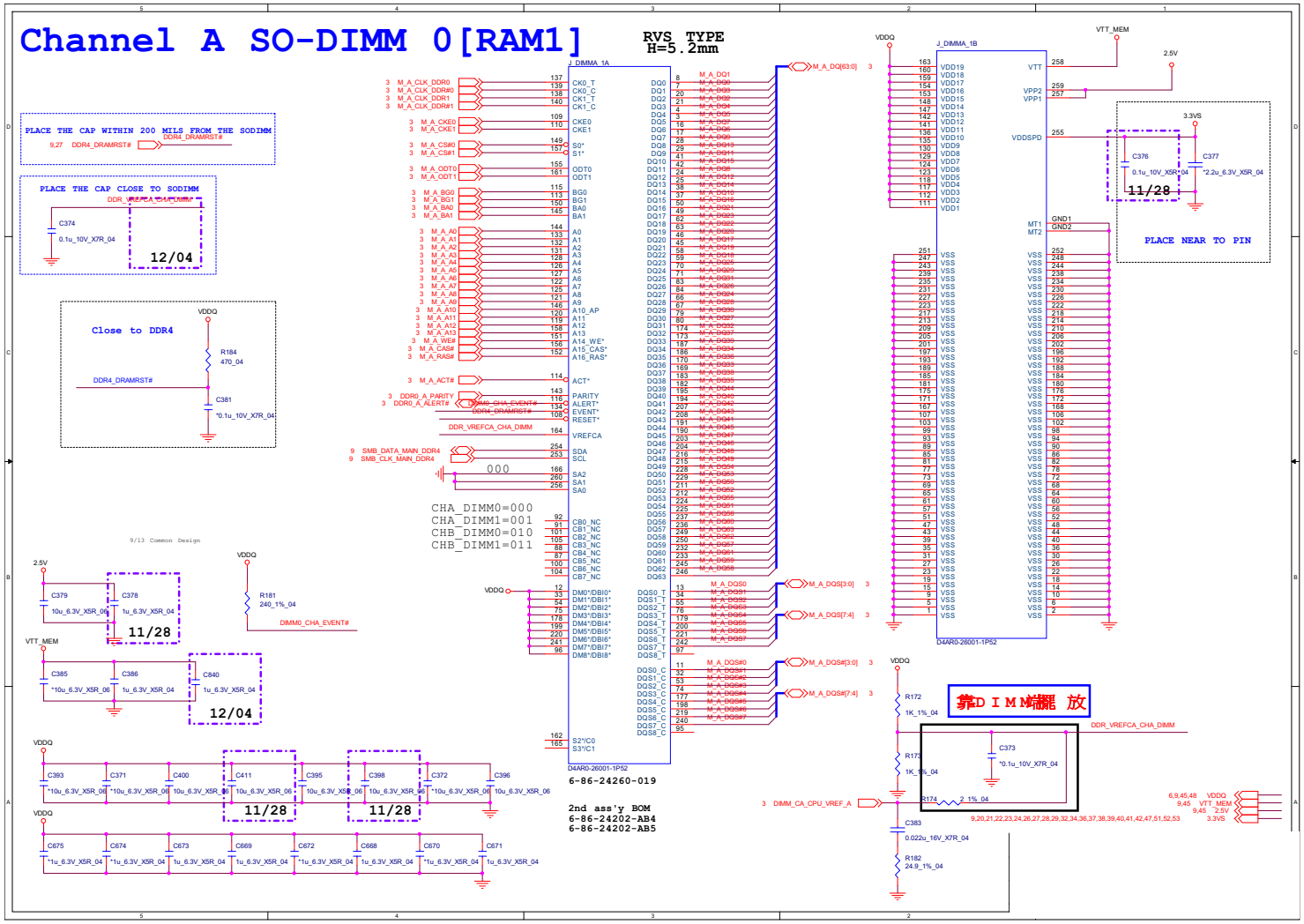

Sheet 8 of 60
DDR4 CHA SO-DIMM

DDR4 CHB SO-DIMM

Sheet 9 of 60
DDR4 CHB SO-DIMM

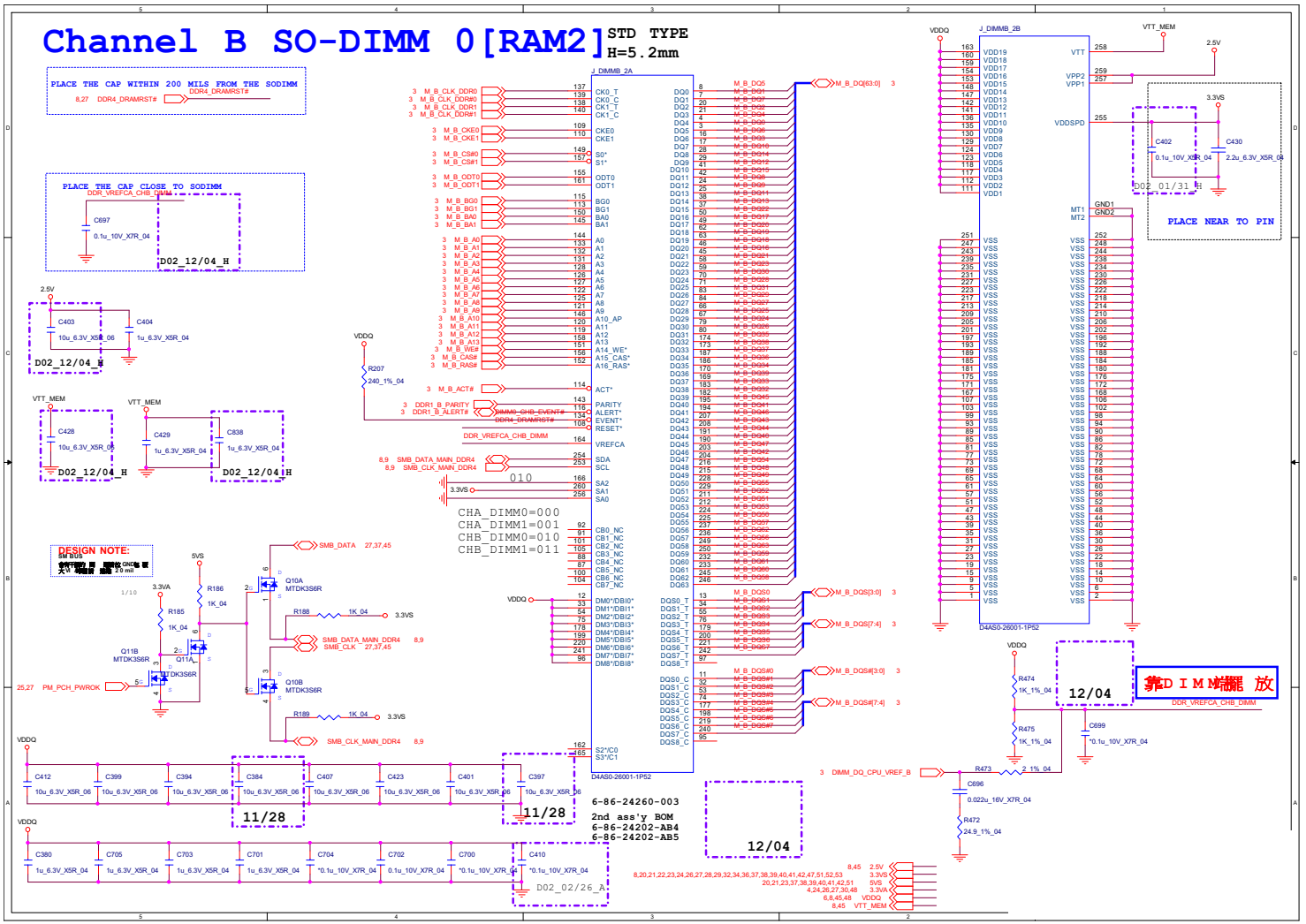

VGA PCI-E Interface

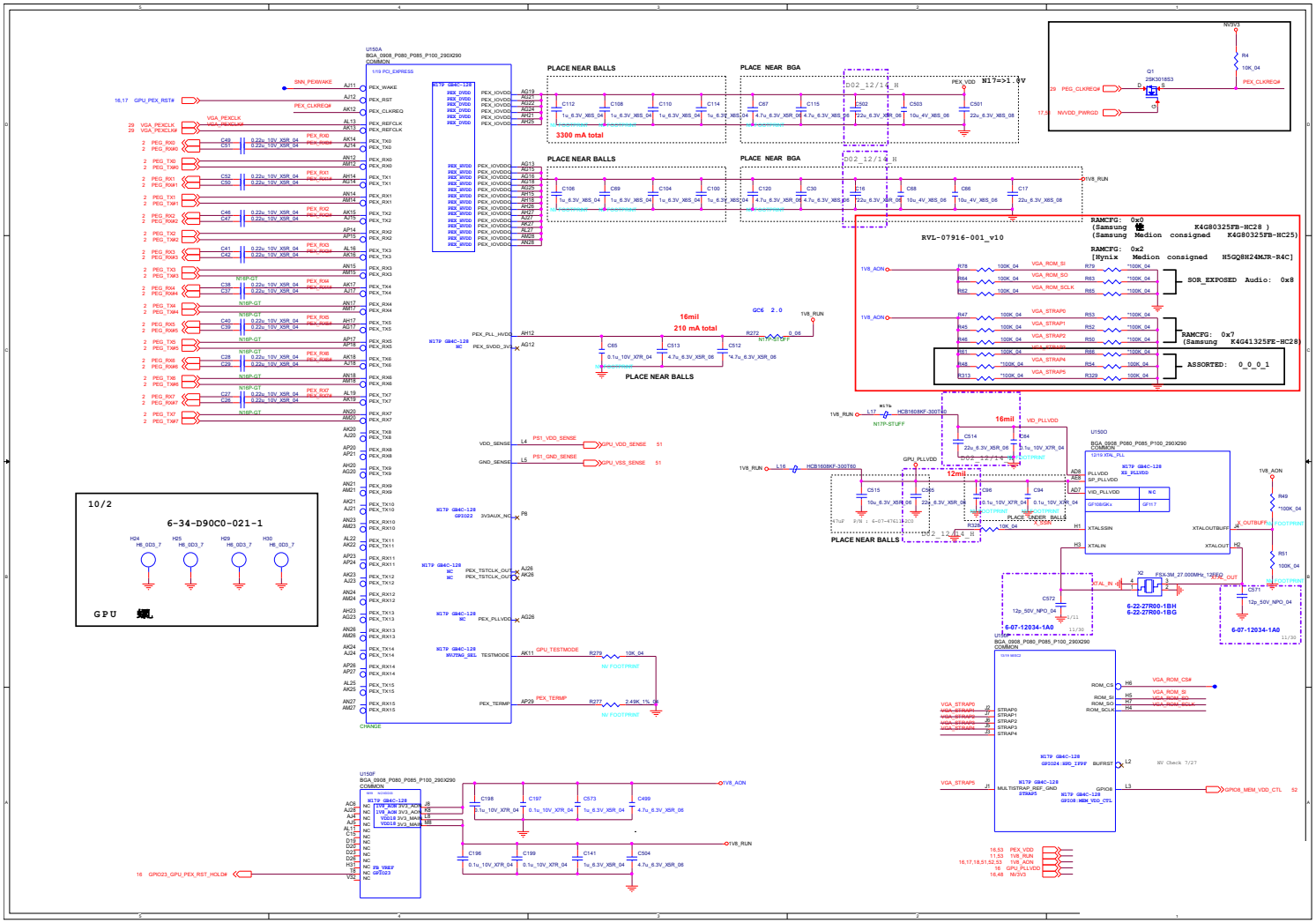

Sheet 10 of 60
VGA PCI-E Interface

VGA Frame Buffer Interface

Sheet 11 of 60
VGA Frame Buffer Interface

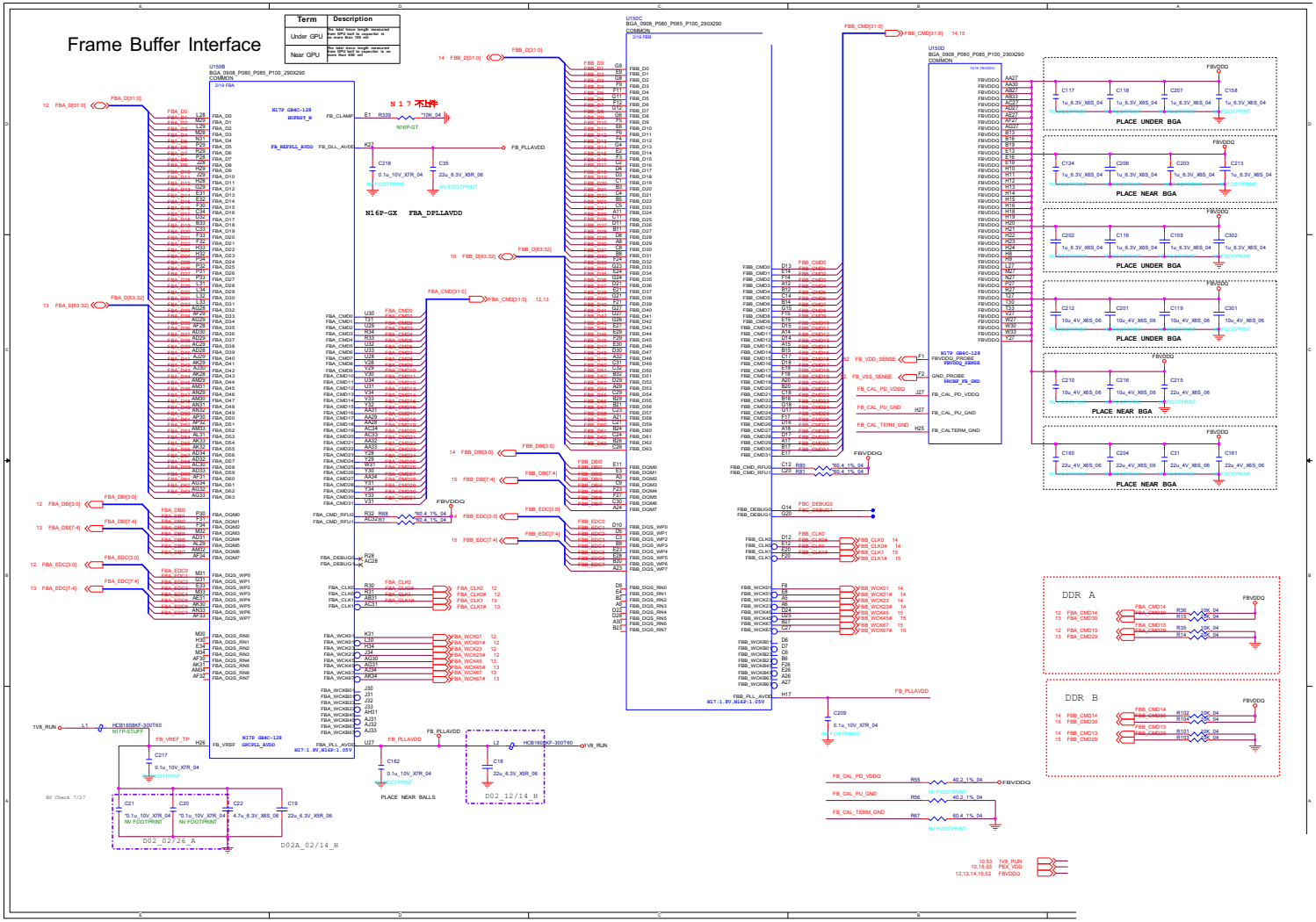

VGA Frame Buffer A

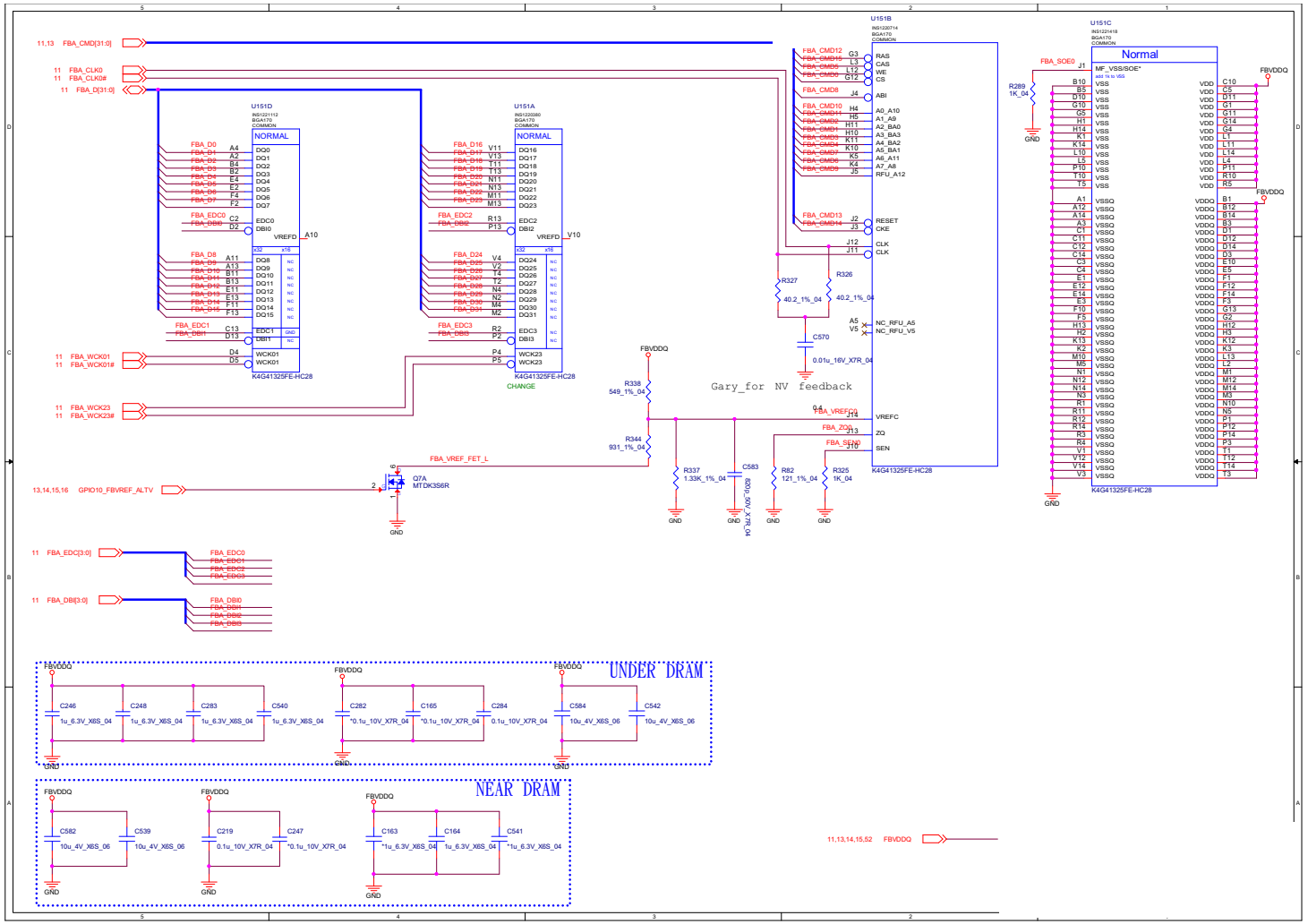

Sheet 12 of 60
VGA Frame Buffer A

VGA Frame Buffer A

Sheet 13 of 60
VGA Frame Buffer A

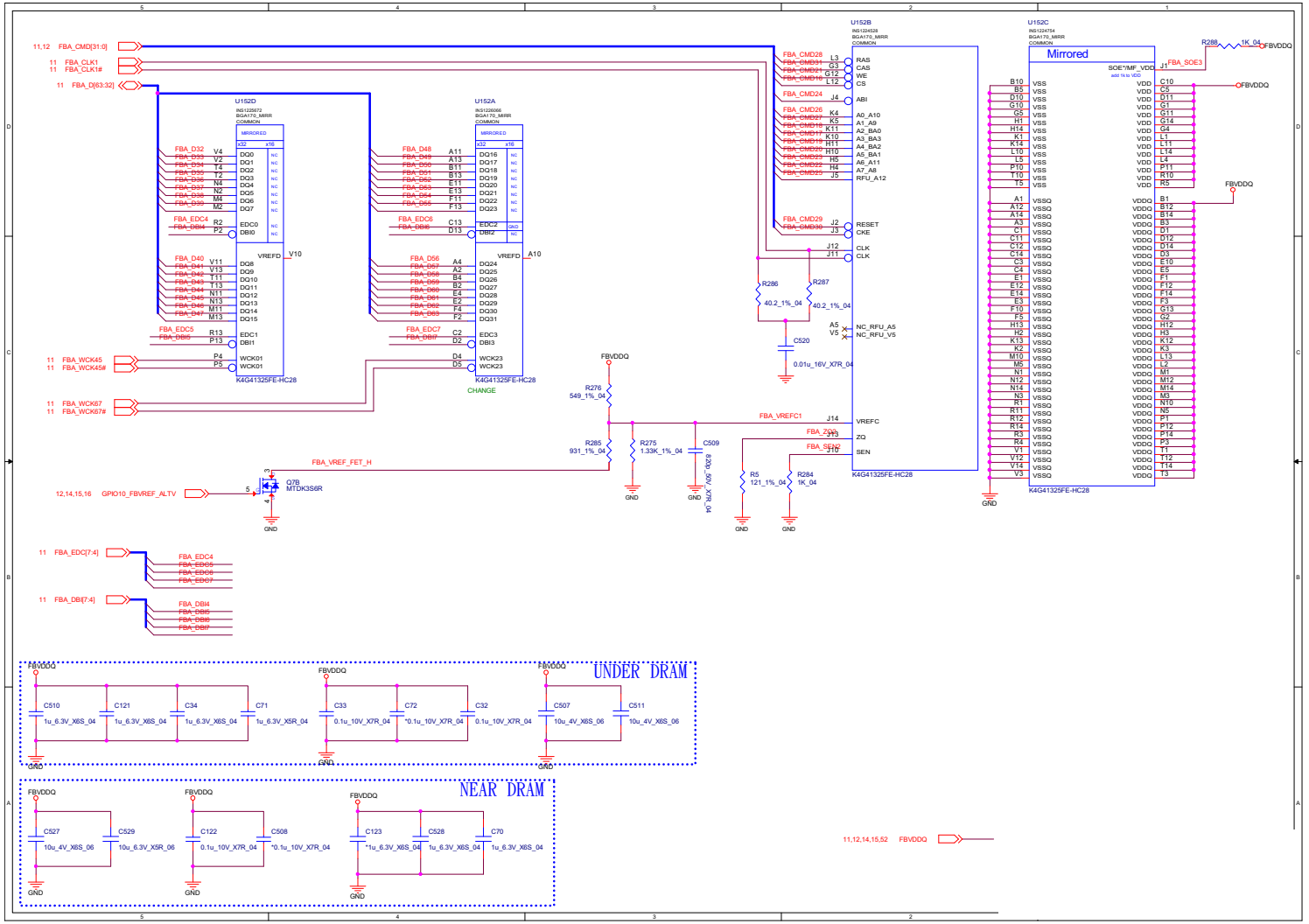

VGA Frame Buffer B

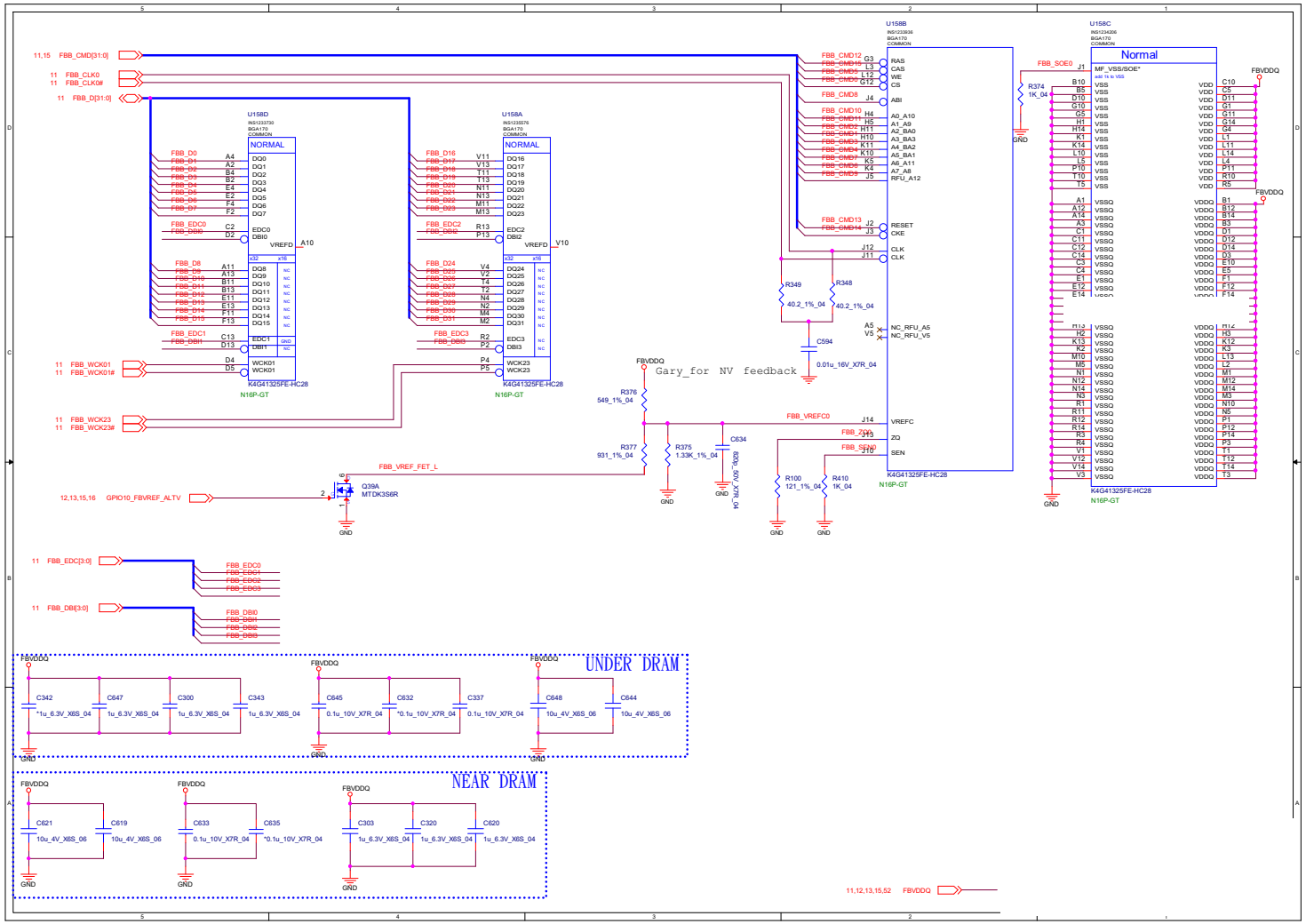

Sheet 14 of 60
VGA Frame Buffer
B

VGA Frame Buffer B

Sheet 15 of 60
VGA Frame Buffer B

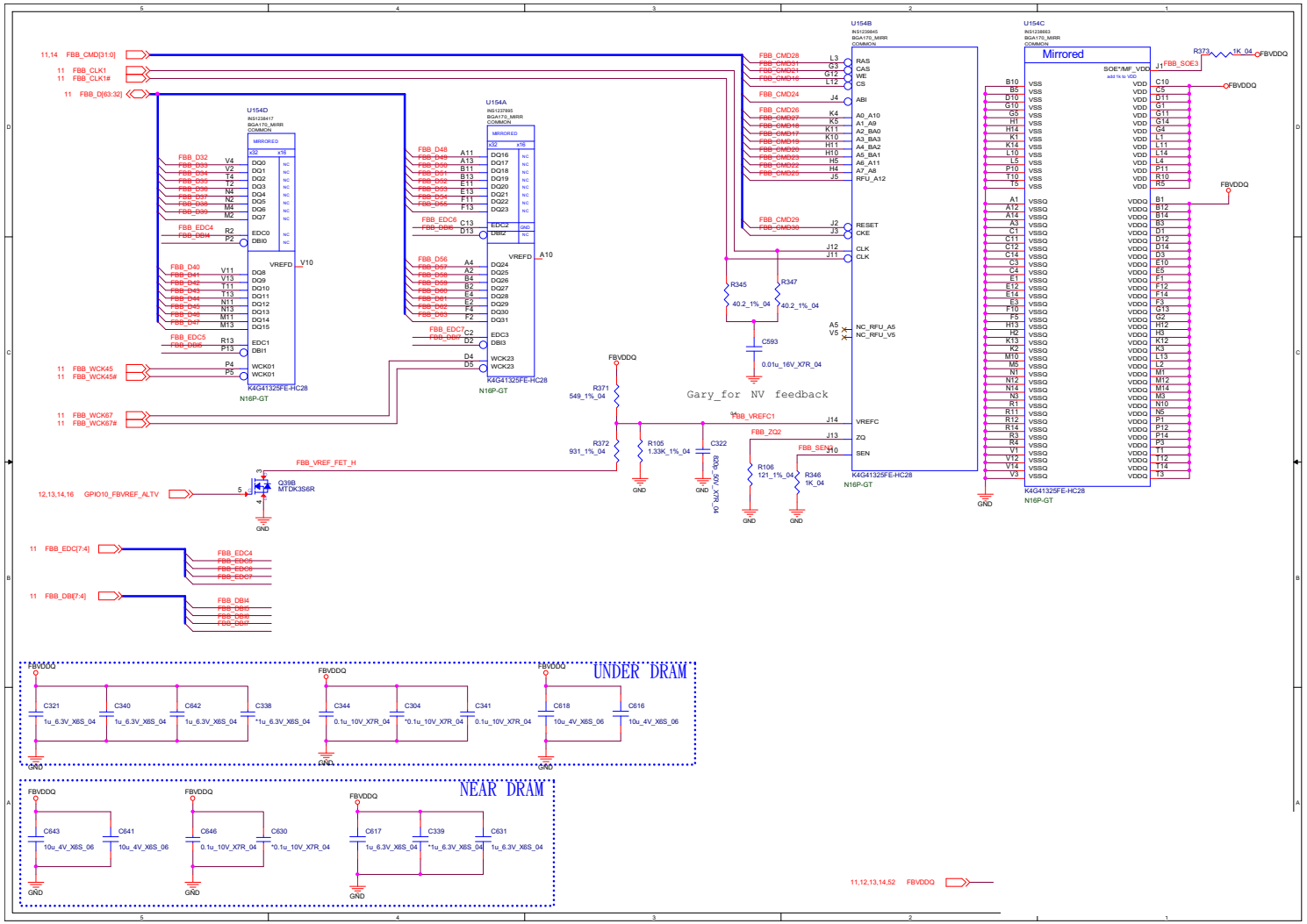

VGA I/O

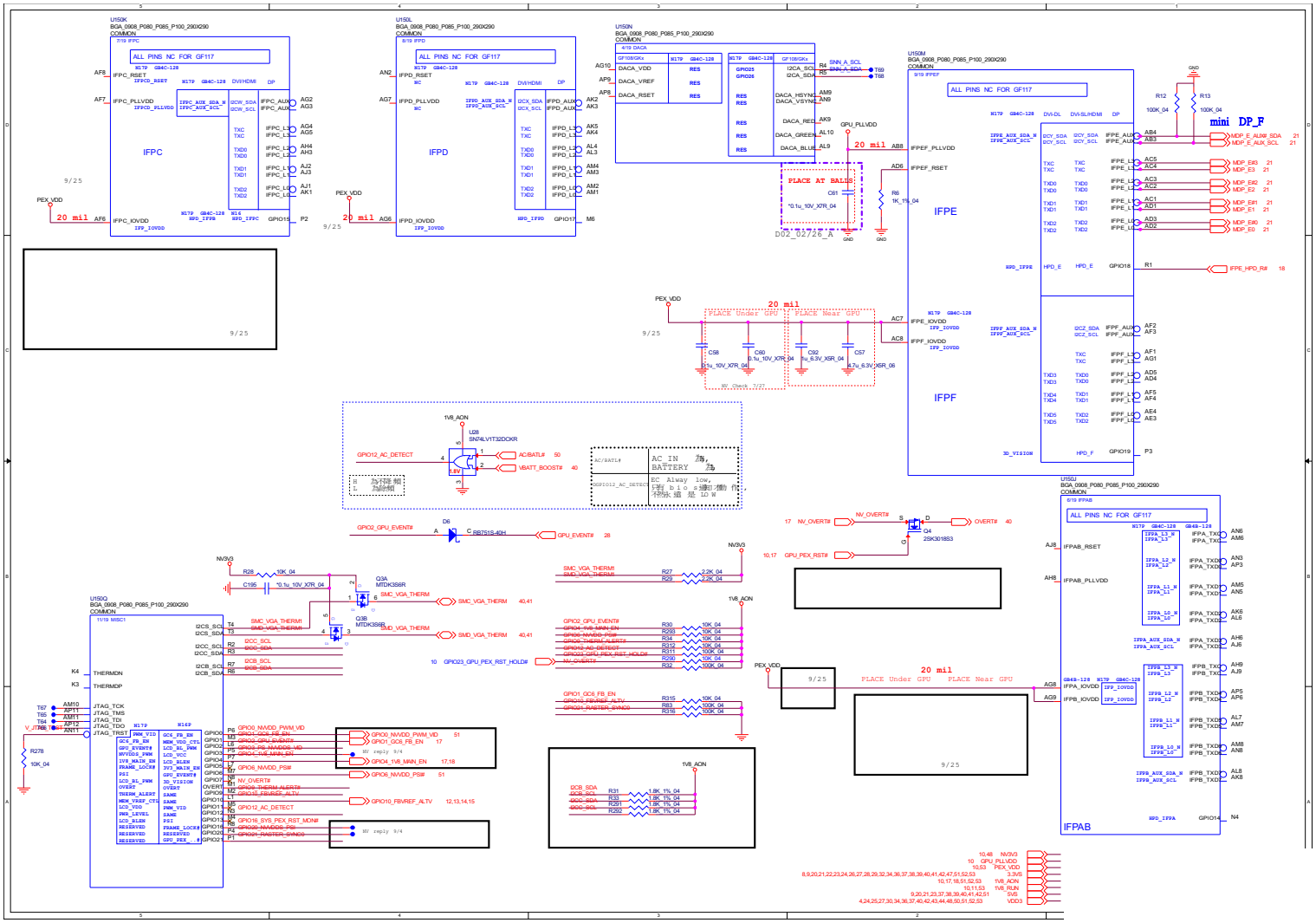

Sheet 16 of 60
VGA I/O

NVIDIA Power Sequence

Sheet 17 of 60
NVIDIA Power Sequence

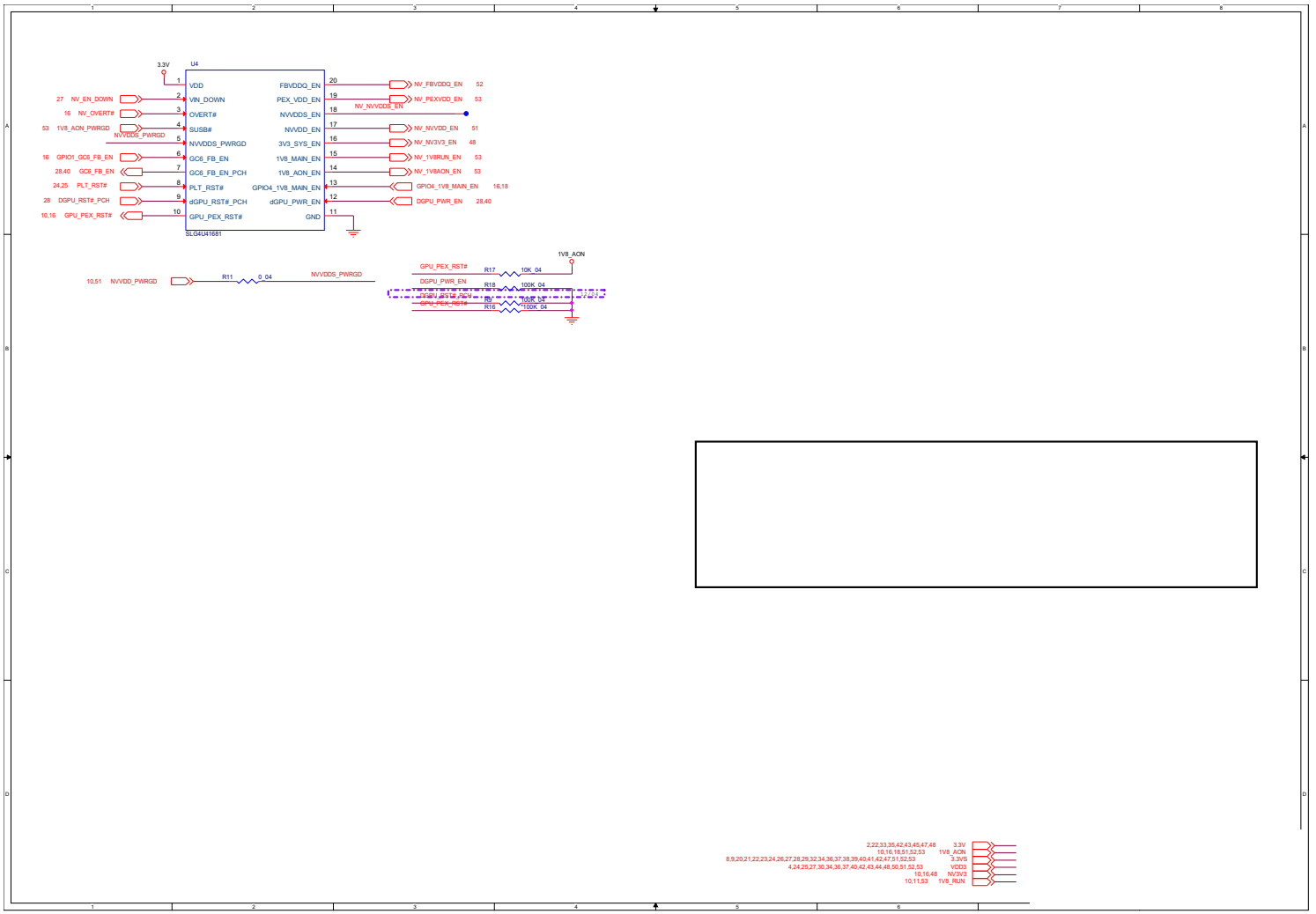

NVIDIA GPIO Level Shift

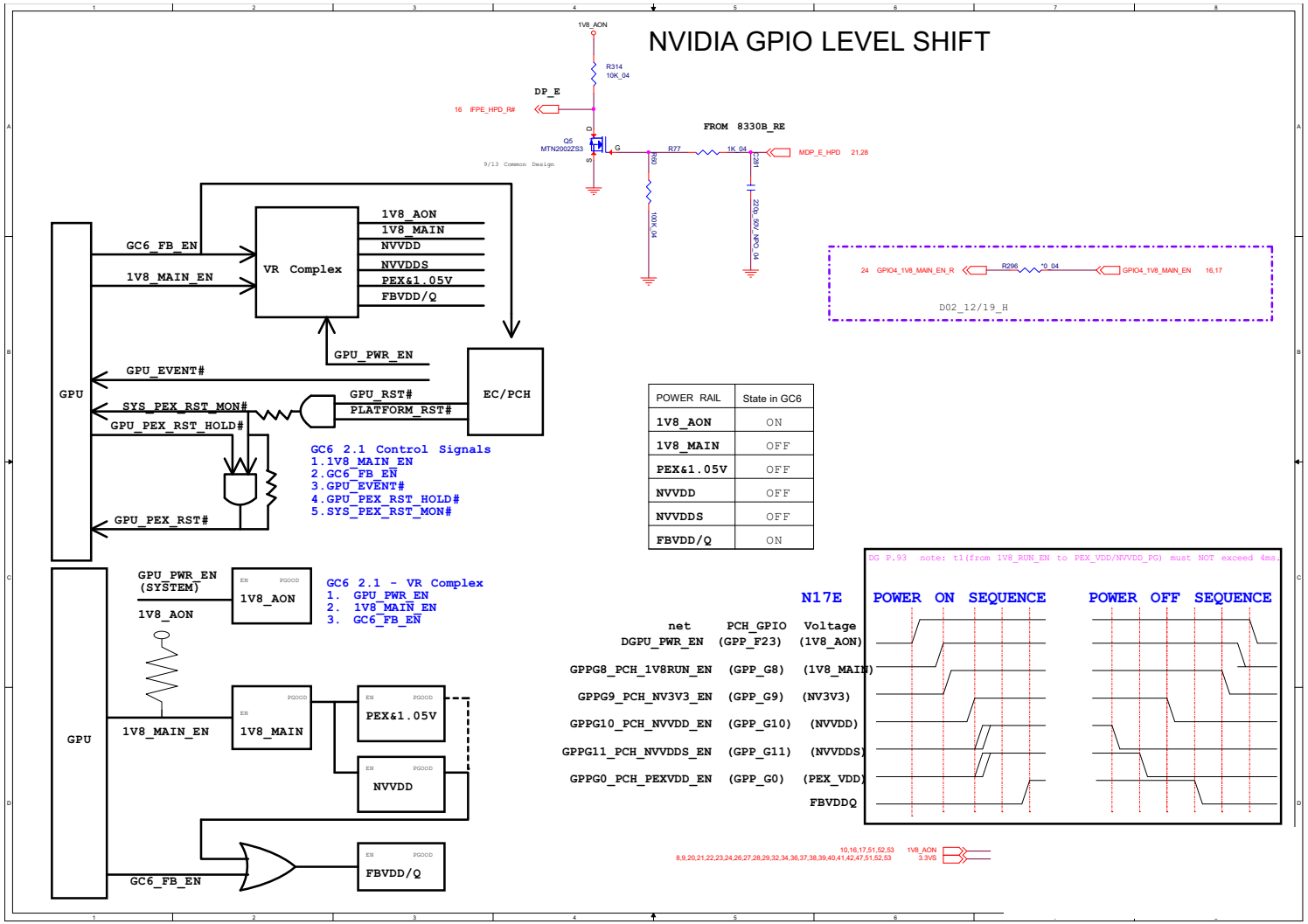

Sheet 18 of 60
NVIDIA GPIO Level Shift

VGA NVVDD Coupling

Sheet 19 of 60
VGA NVVDD Coupling

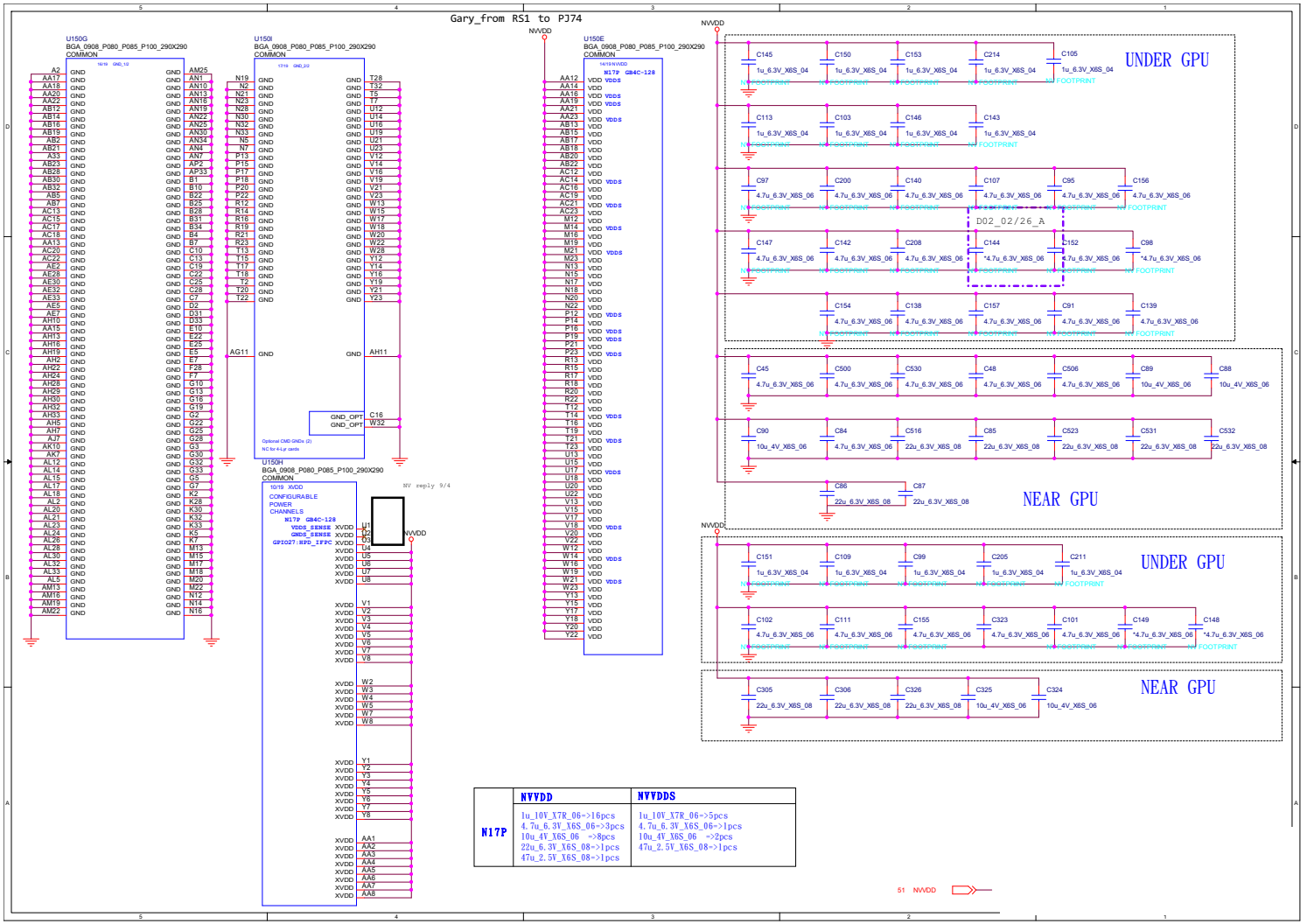

MDP

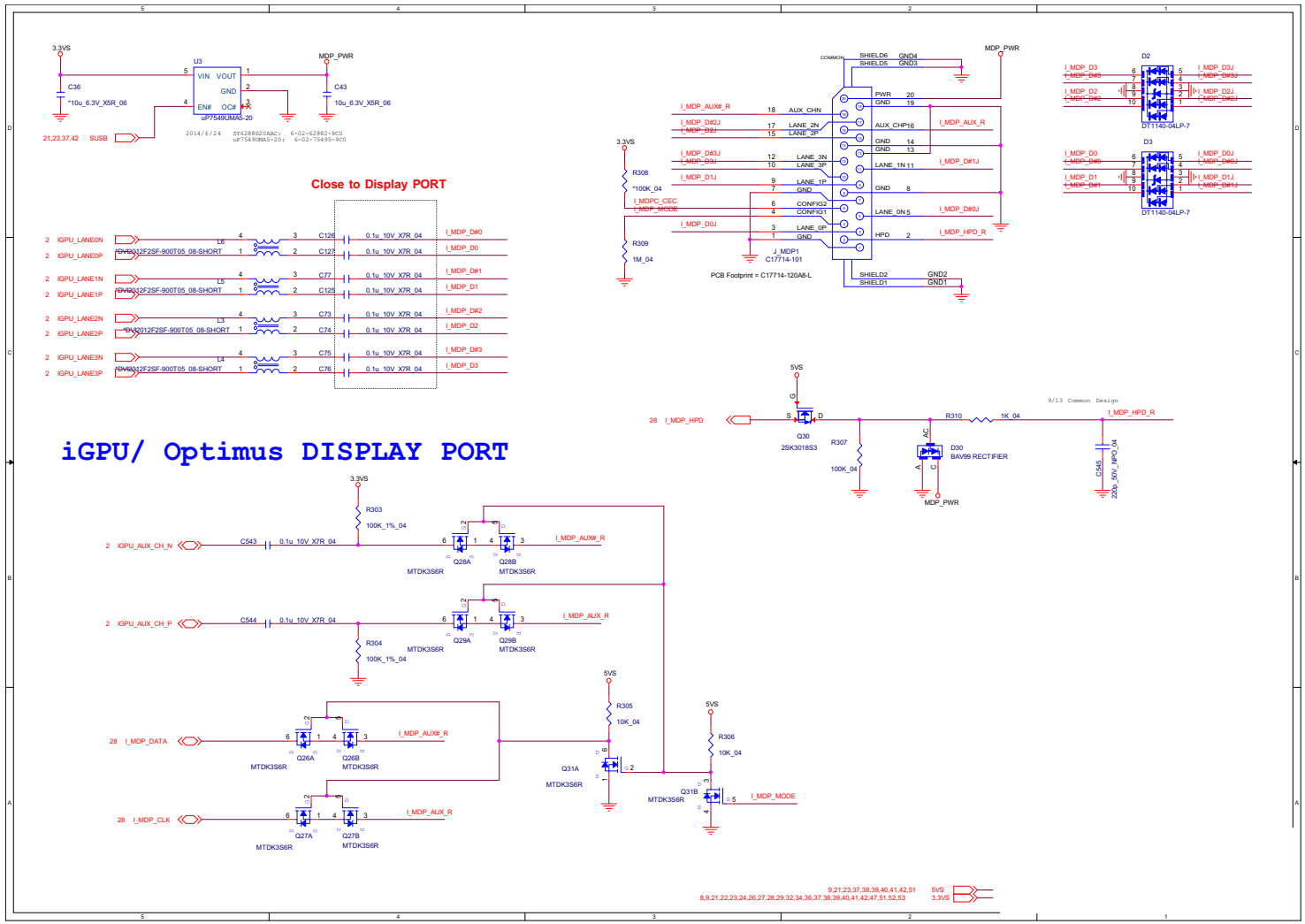

Sheet 20 of 60
MDP

MDP

Sheet 21 of 60
MDP

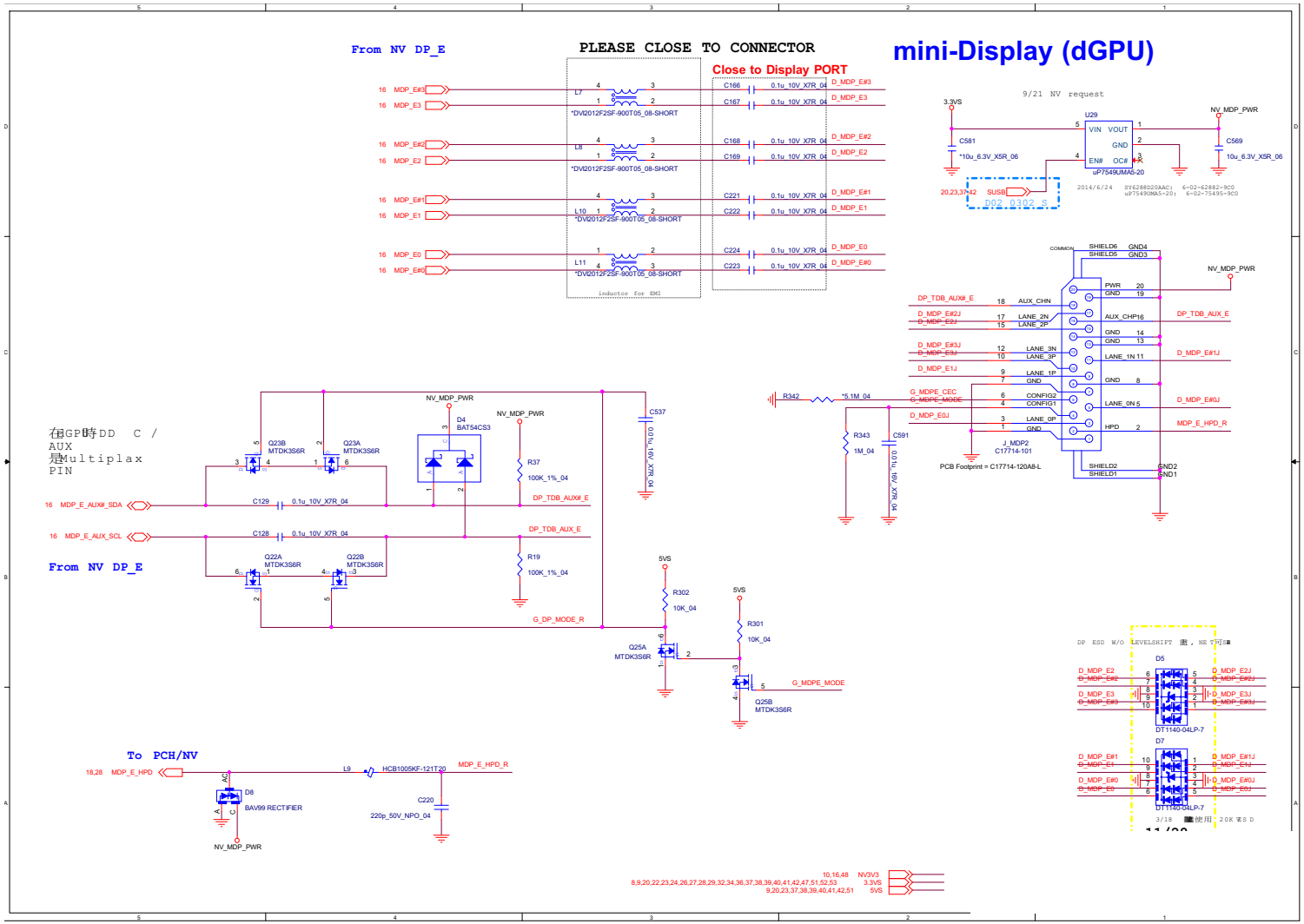

Panel, Inverter

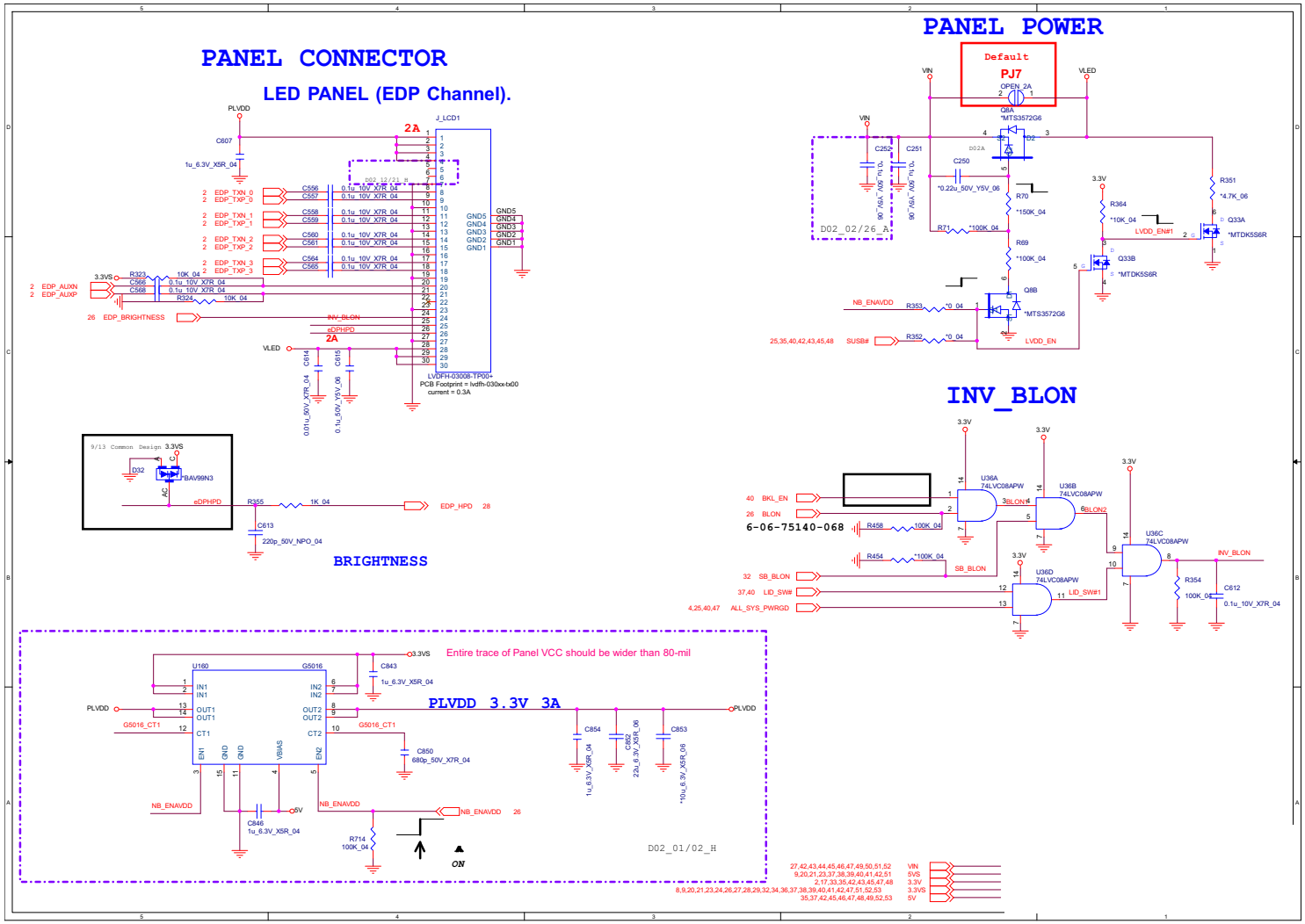

Sheet 22 of 60
Panel, Inverter

B.Schematic Diagrams

HDMI

Sheet 23 of 60
HDMI

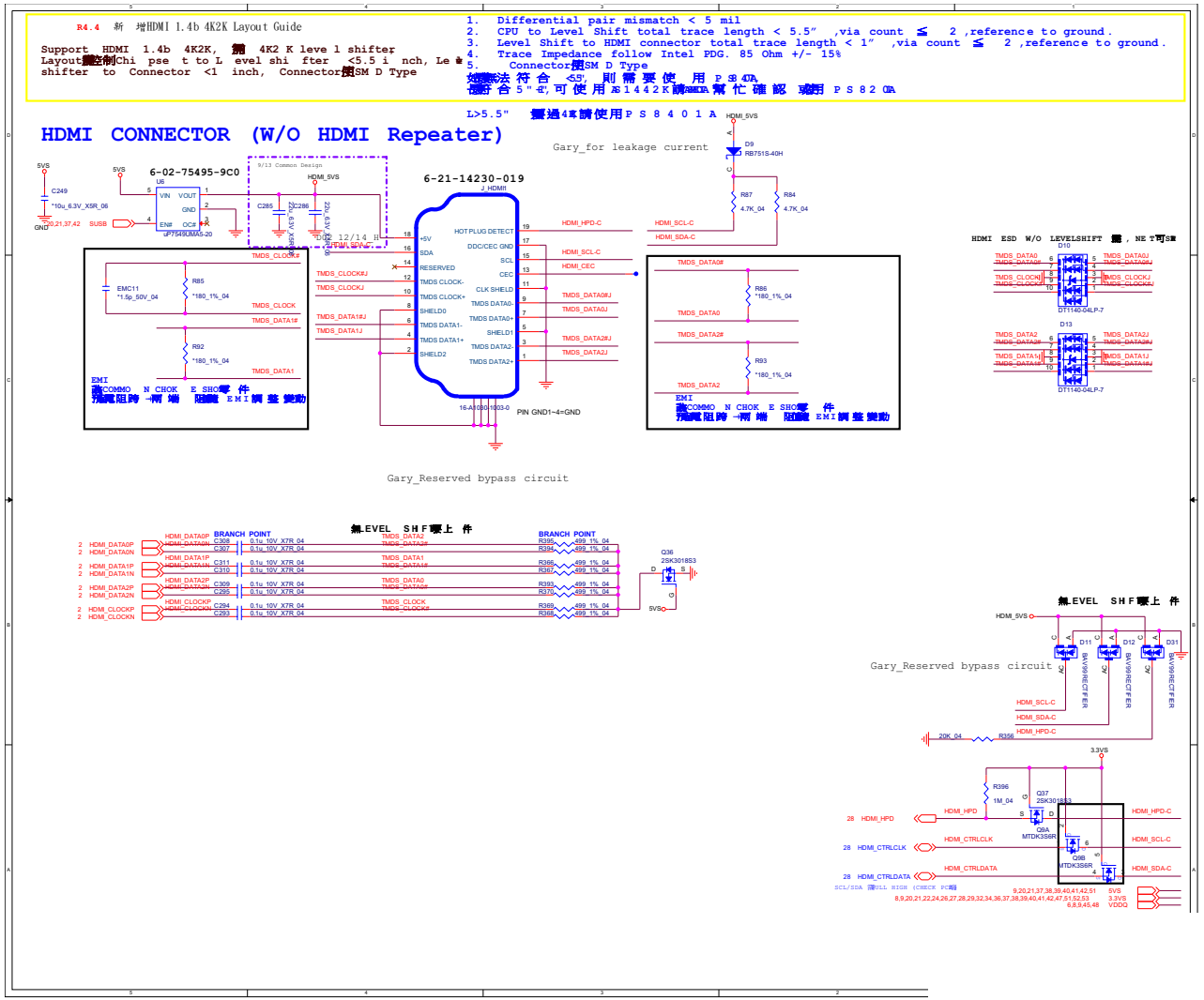

PCH 1/9

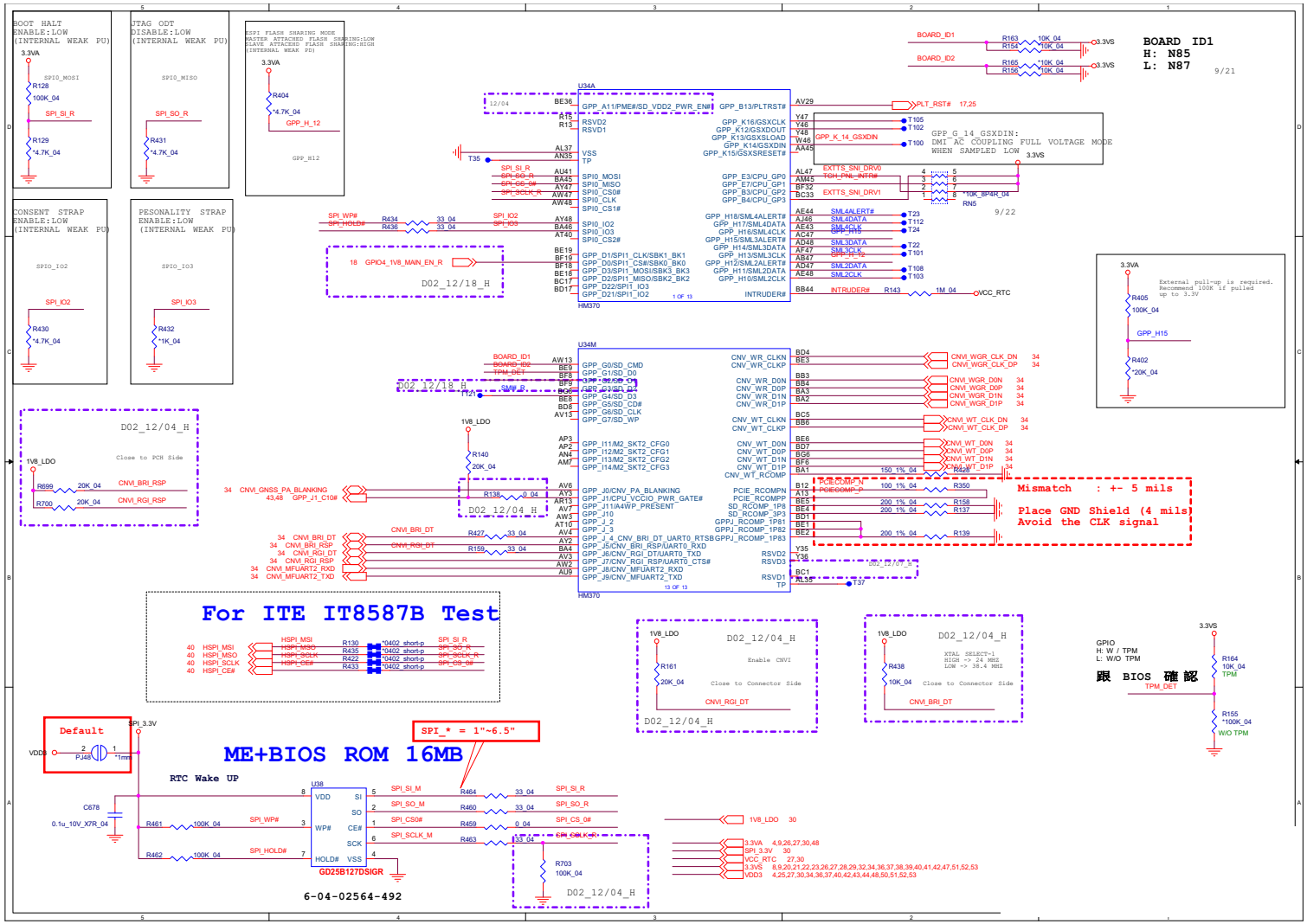

Sheet 24 of 60
PCH 1/9

PCH 2/9

Sheet 25 of 60
PCH 2/9

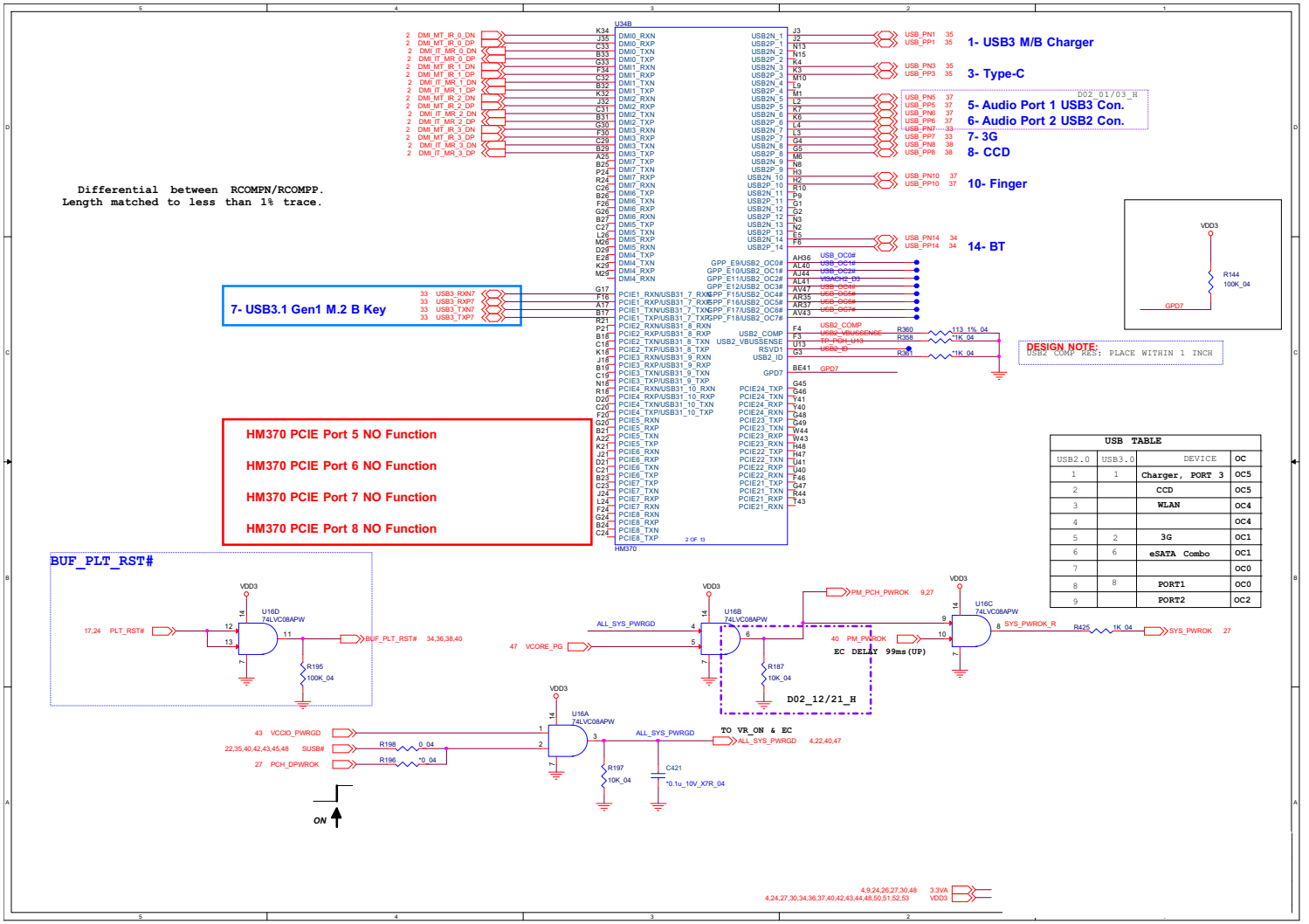

PCH 3/9

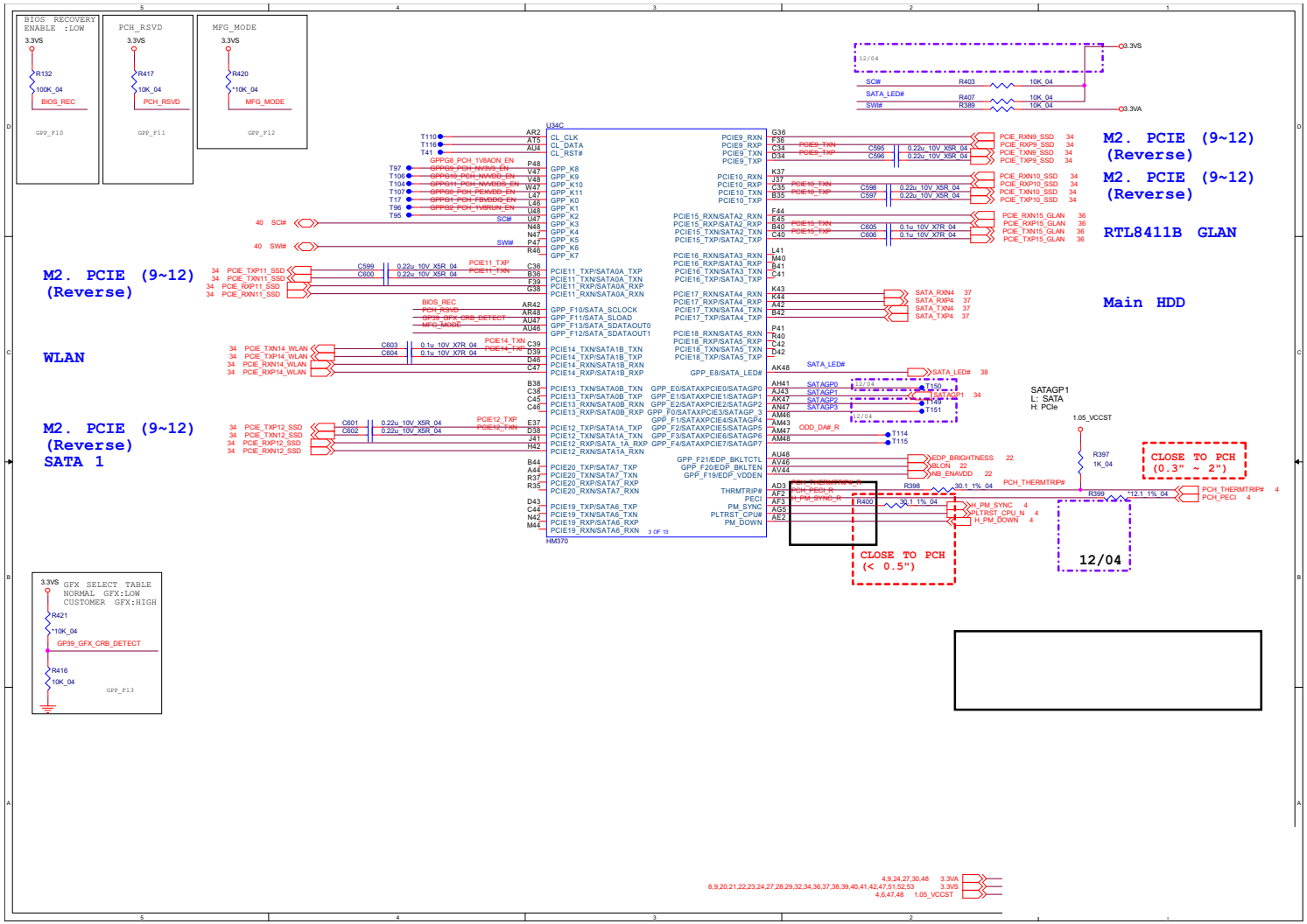

Sheet 26 of 60
PCH 3/9

PCH 4/9

Sheet 27 of 60
PCH 4/9

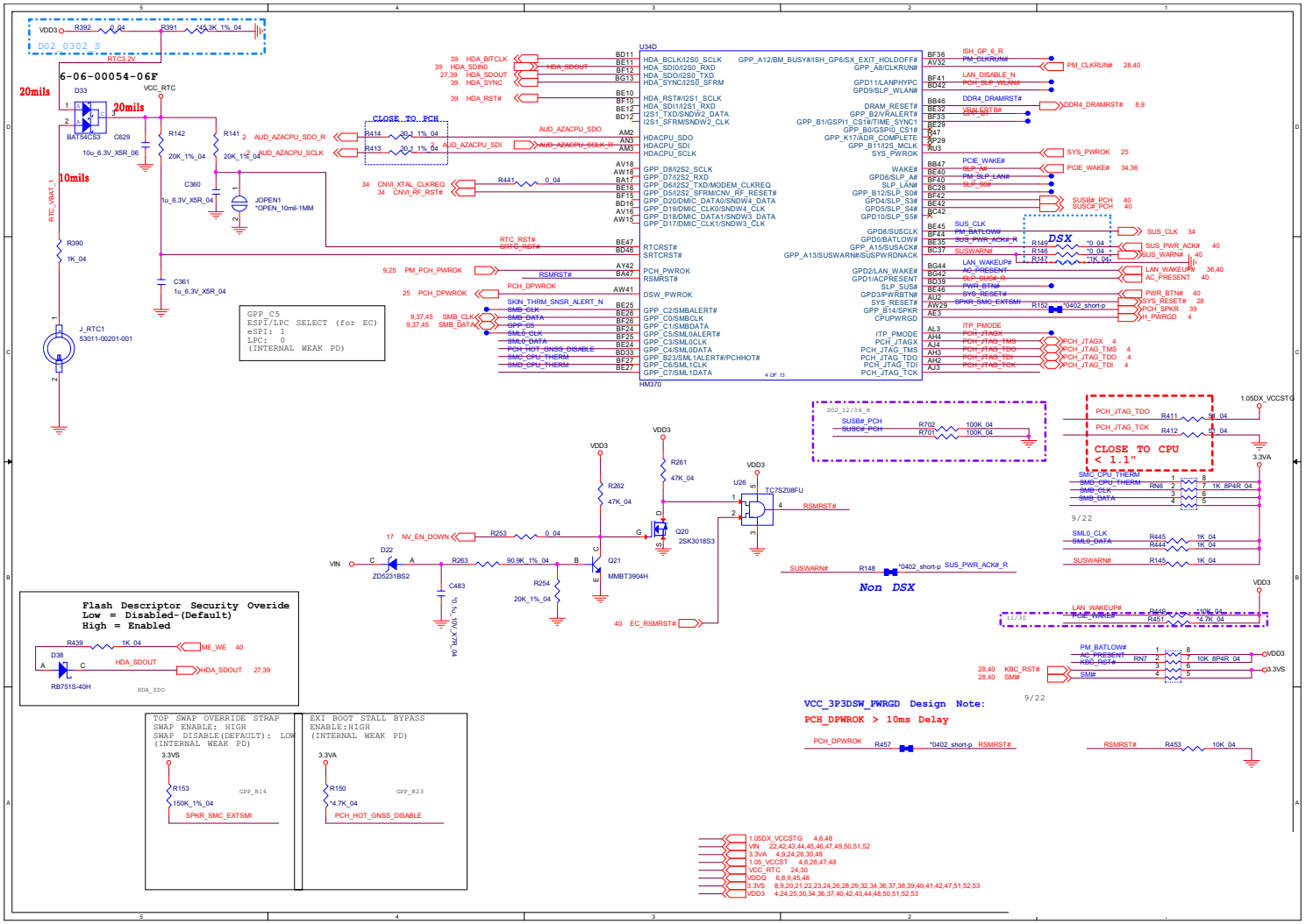

PCH 5/9

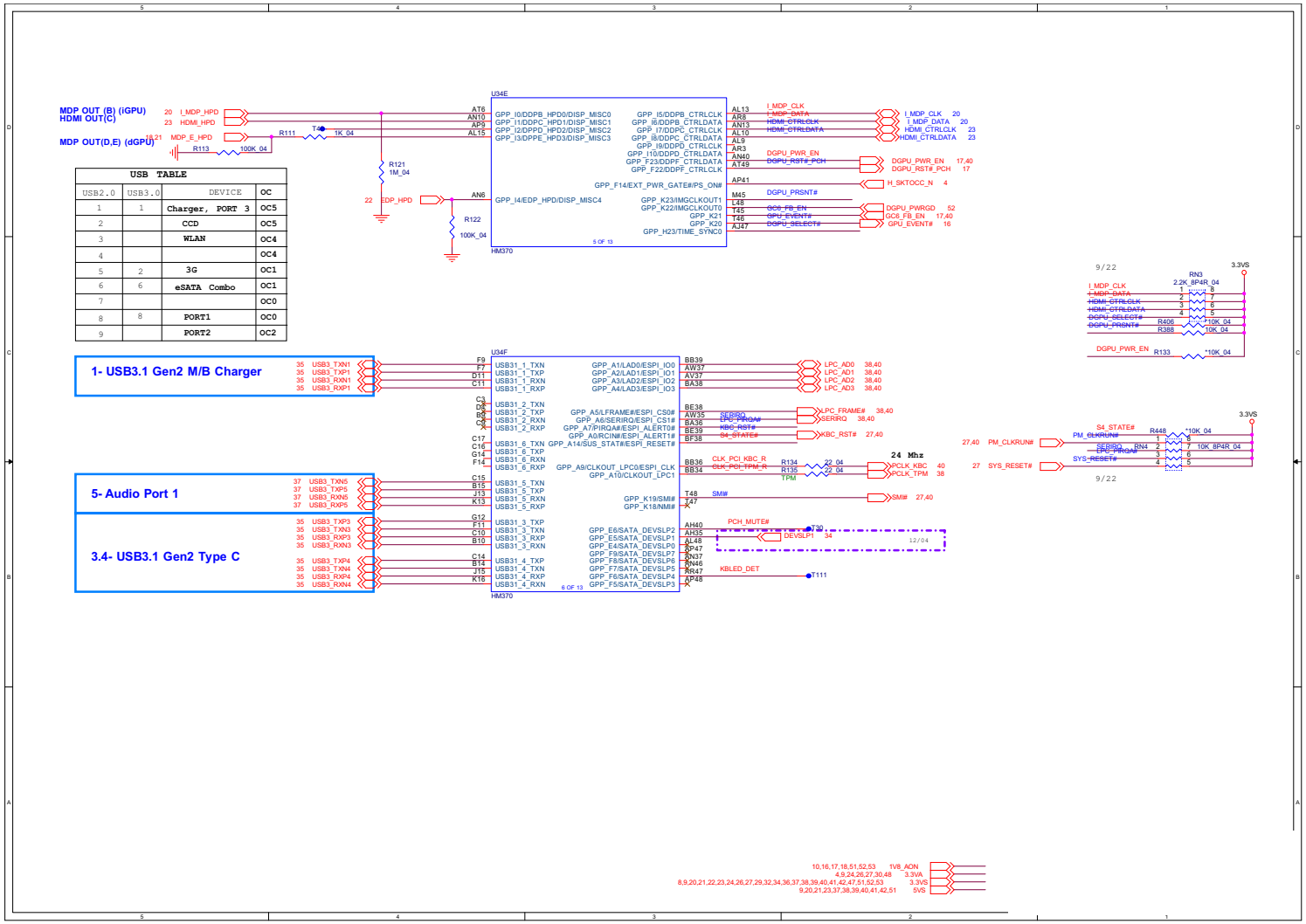

Sheet 28 of 60
PCH 5/9

PCH 6/9

Sheet 29 of 60
PCH 6/9

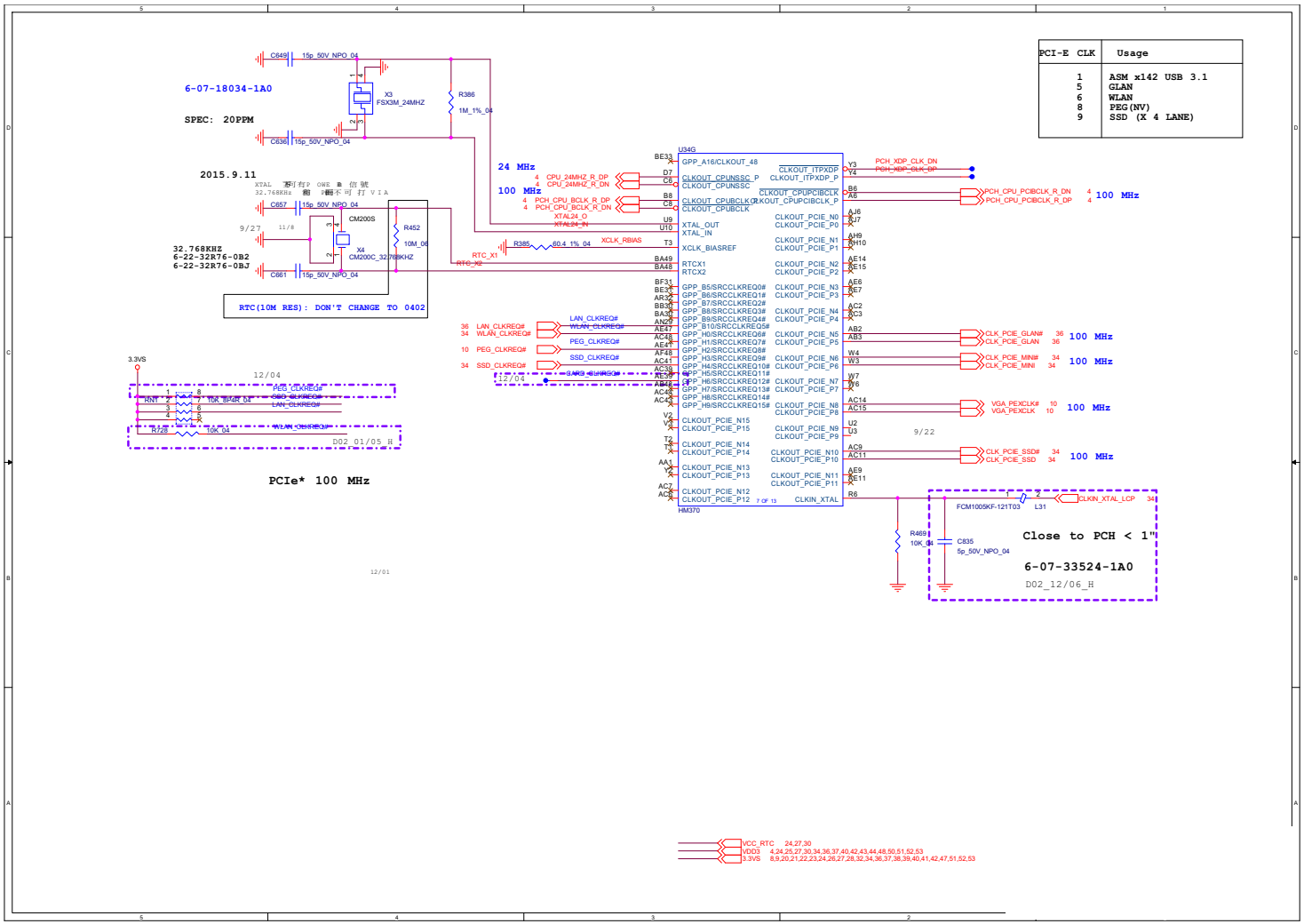

PCH 7/9

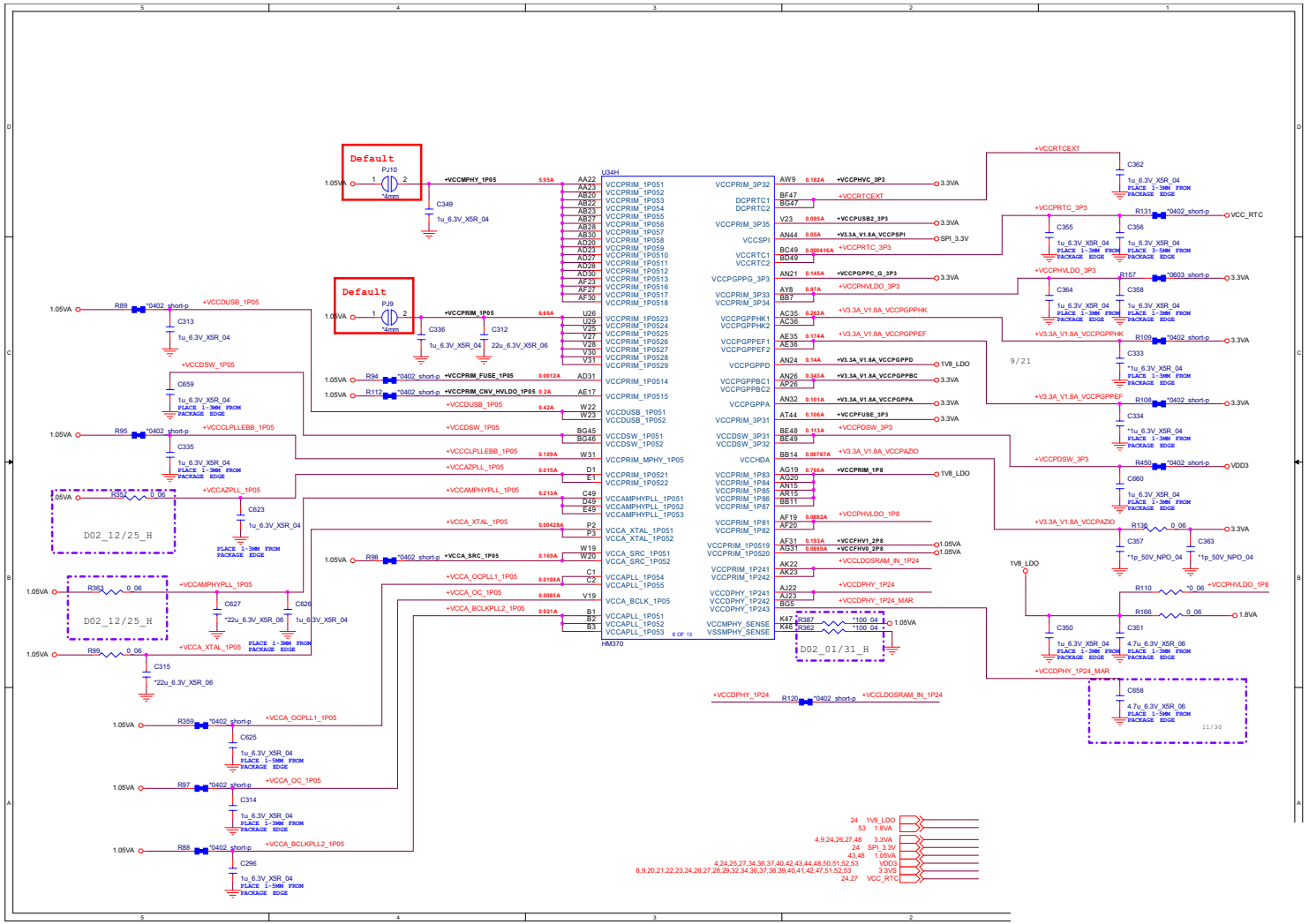

Sheet 30 of 60
PCH 7/9

PCH 8/9

Sheet 31 of 60
PCH 8/9

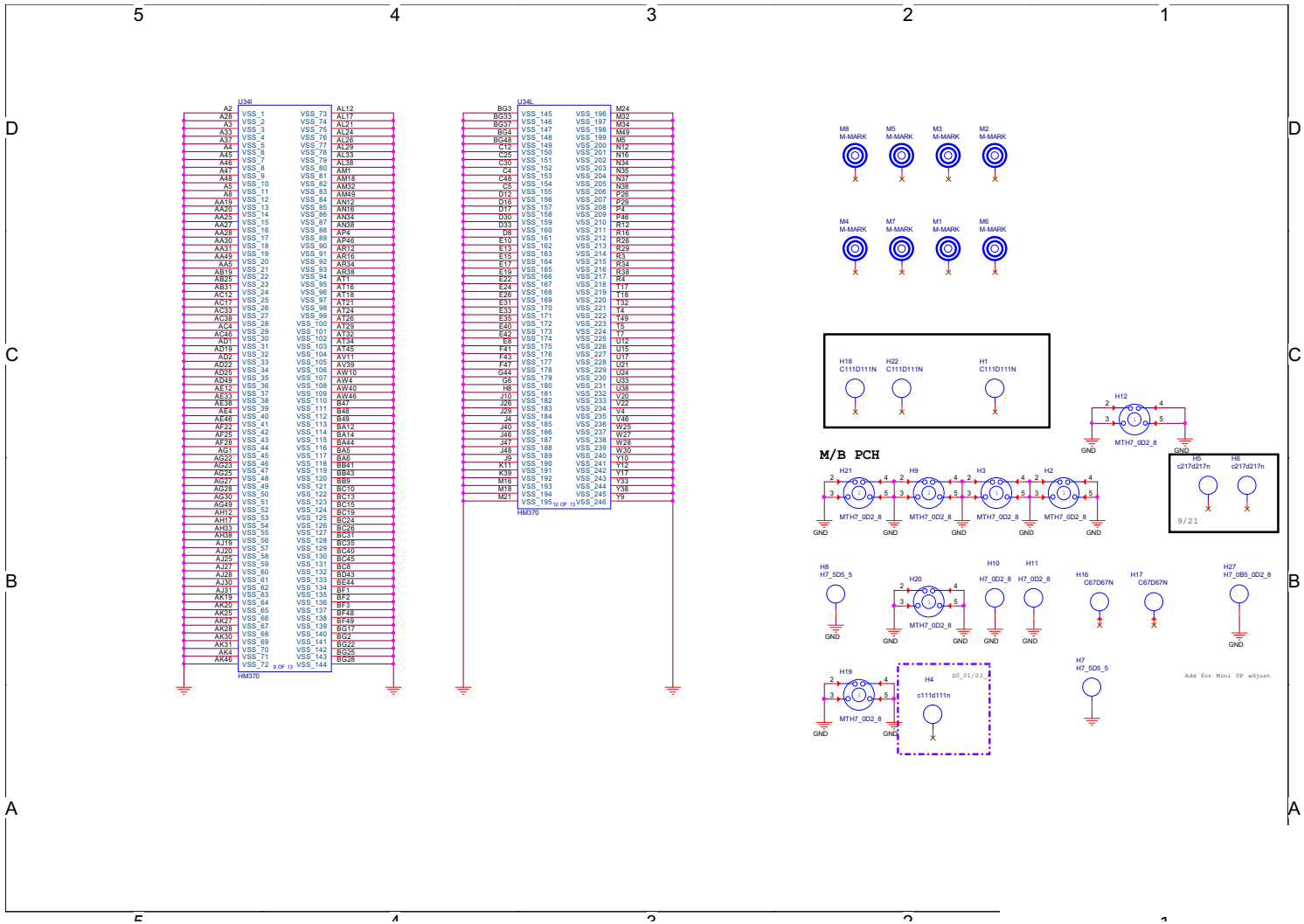

PCH 9/9

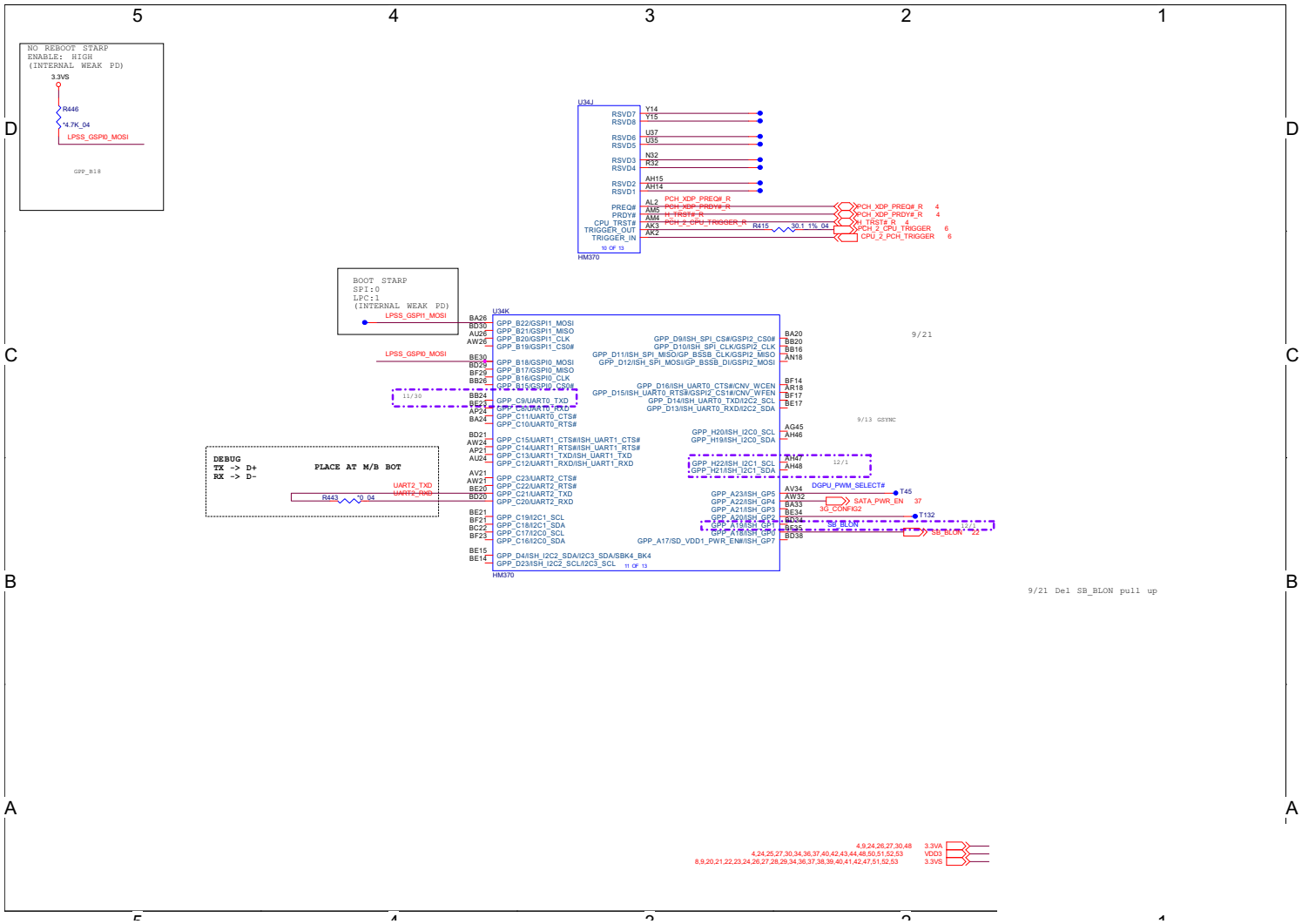

Sheet 32 of 60
PCH 9/9

M.2 3G Card

Sheet 33 of 60
M.2 3G Card

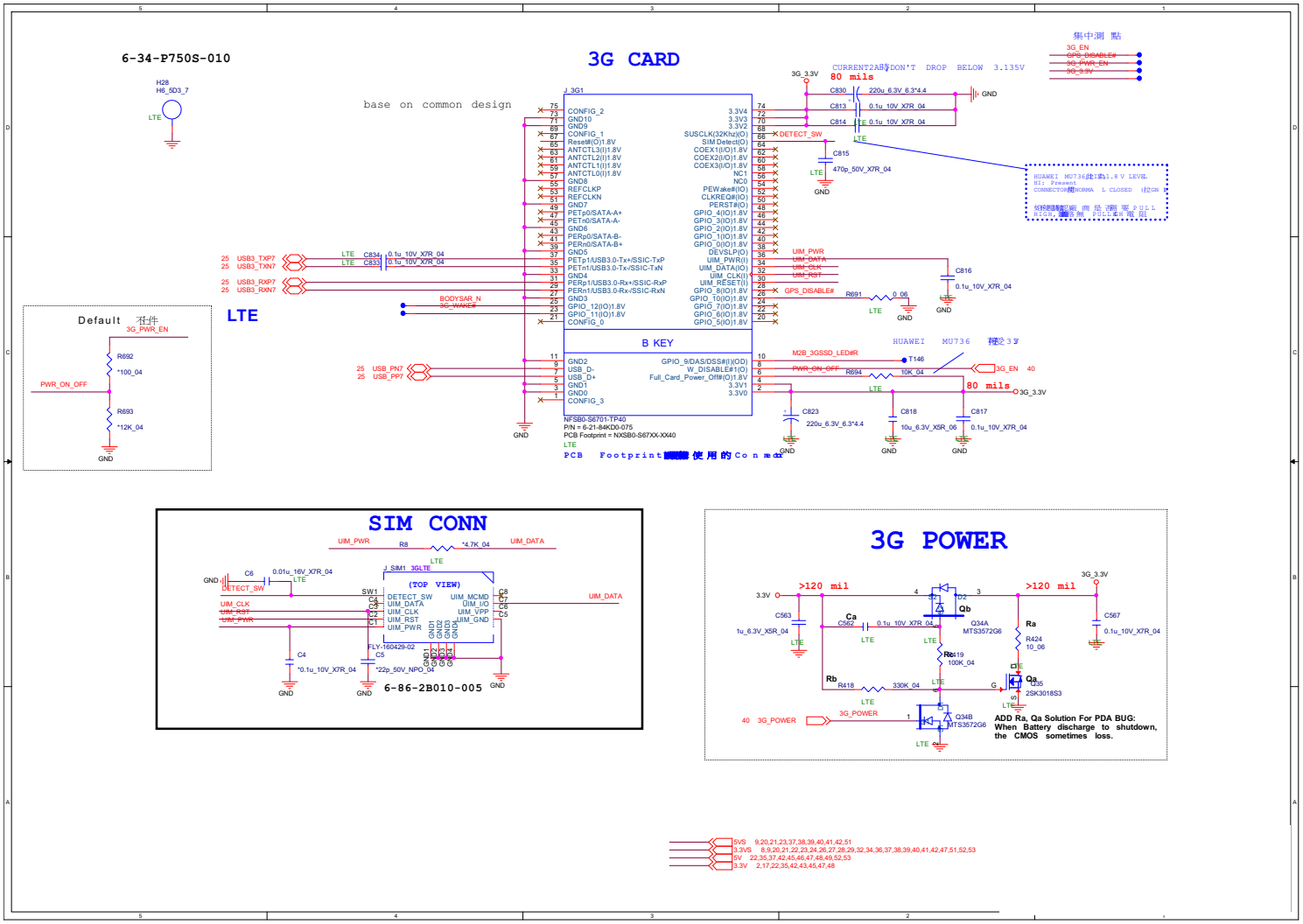

M.2 WLAN+BT, SSD

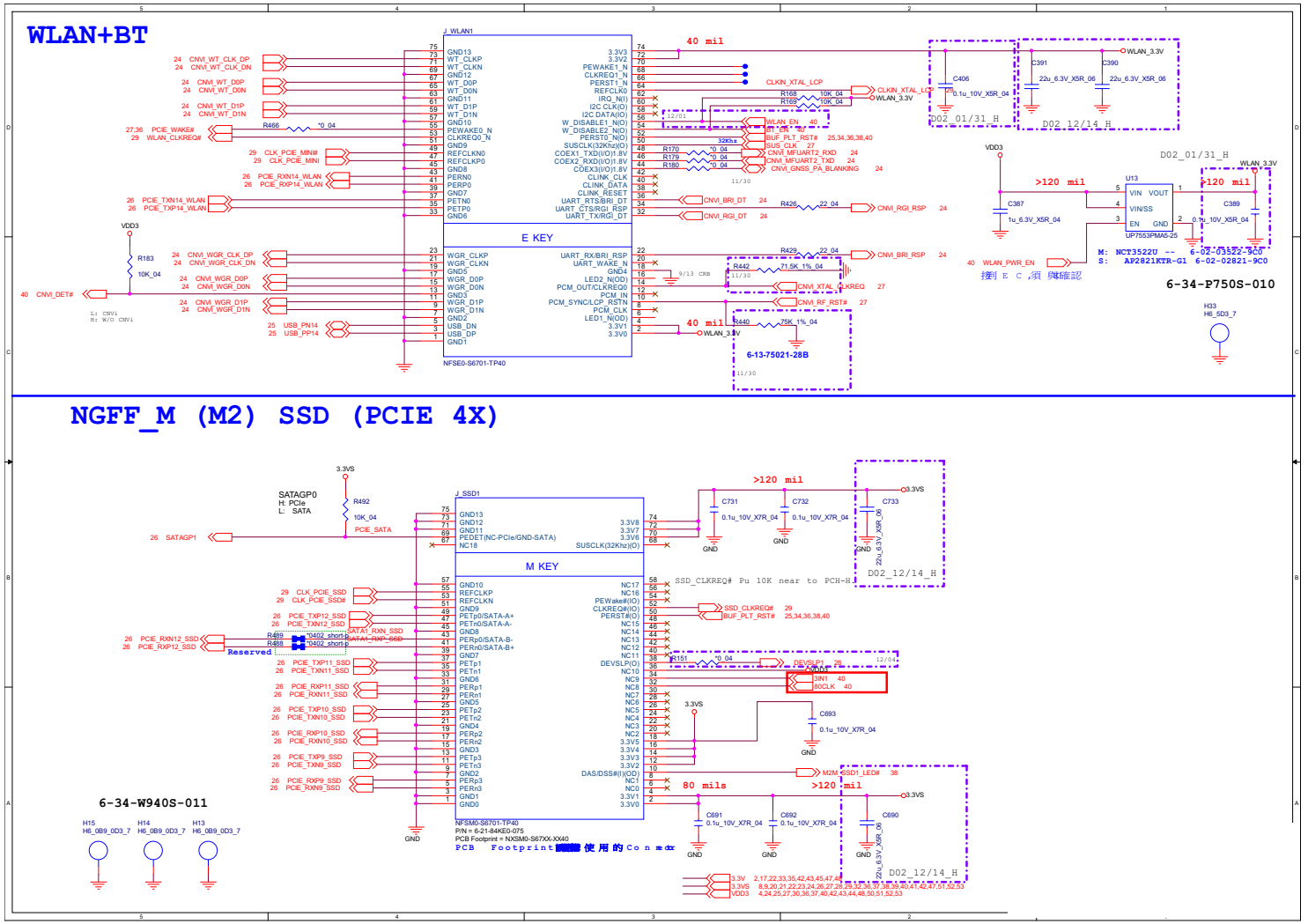

Sheet 34 of 60
M.2 WLAN+BT, SSD

USB Conn, USB Charger

Sheet 35 of 60
USB Conn,
USB Charger

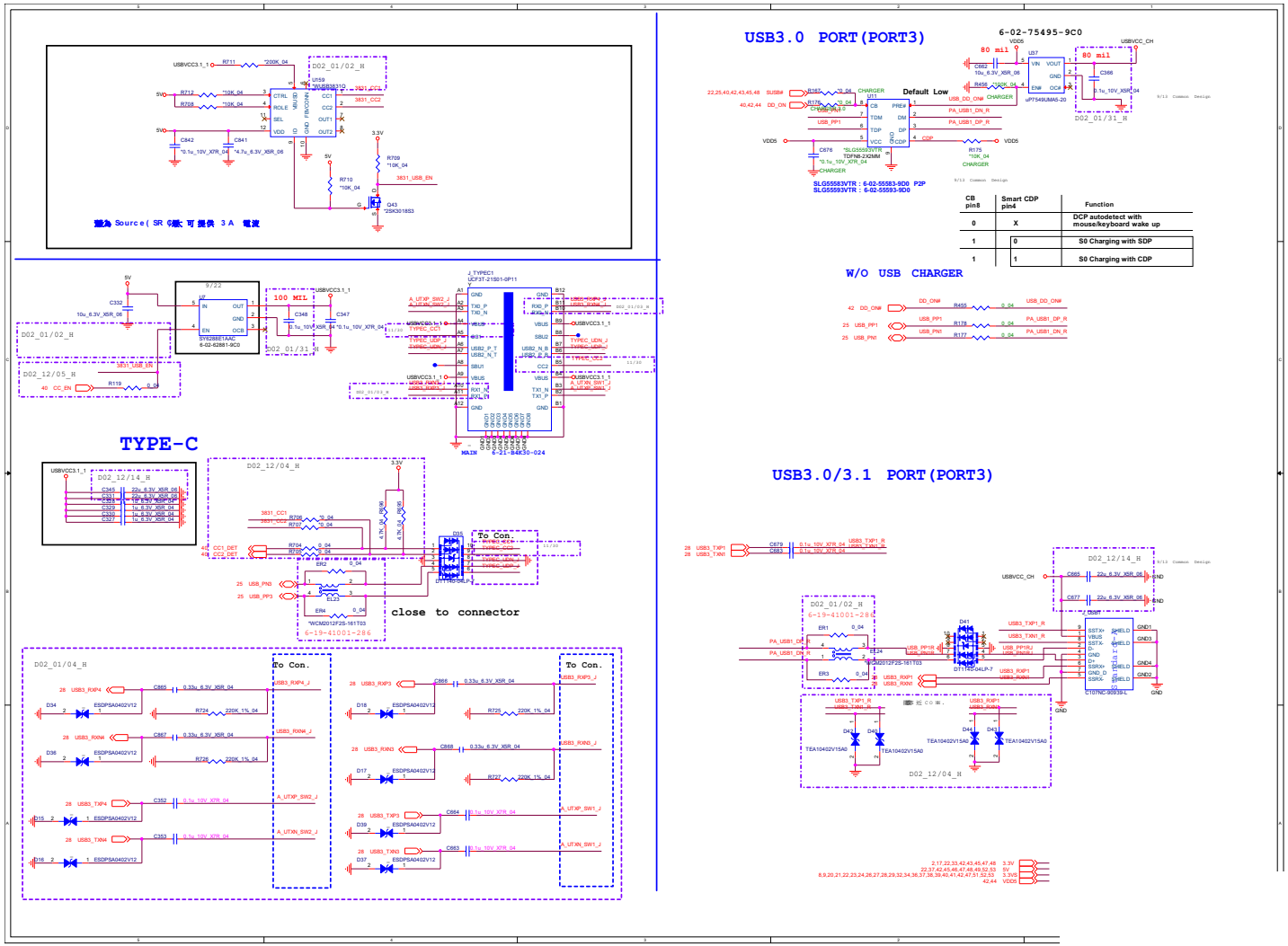

Card Reader / LAN RTL8411B

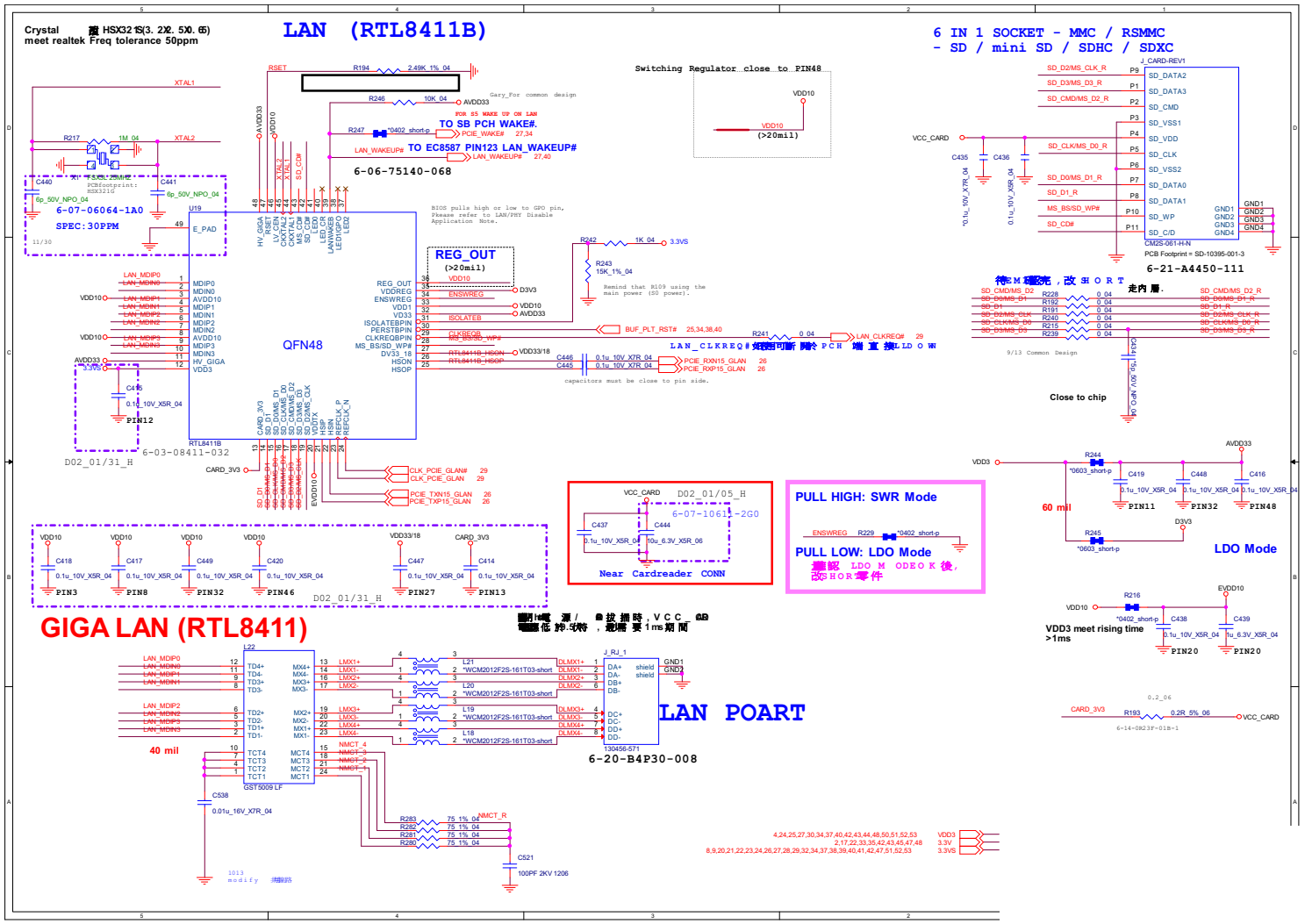

Sheet 36 of 60
Card Reader / LAN RTL8411B

HDD, Click TP, Audio, Hall Con.

Sheet 37 of 60
HDD, Click TP,
Audio, Hall Con.

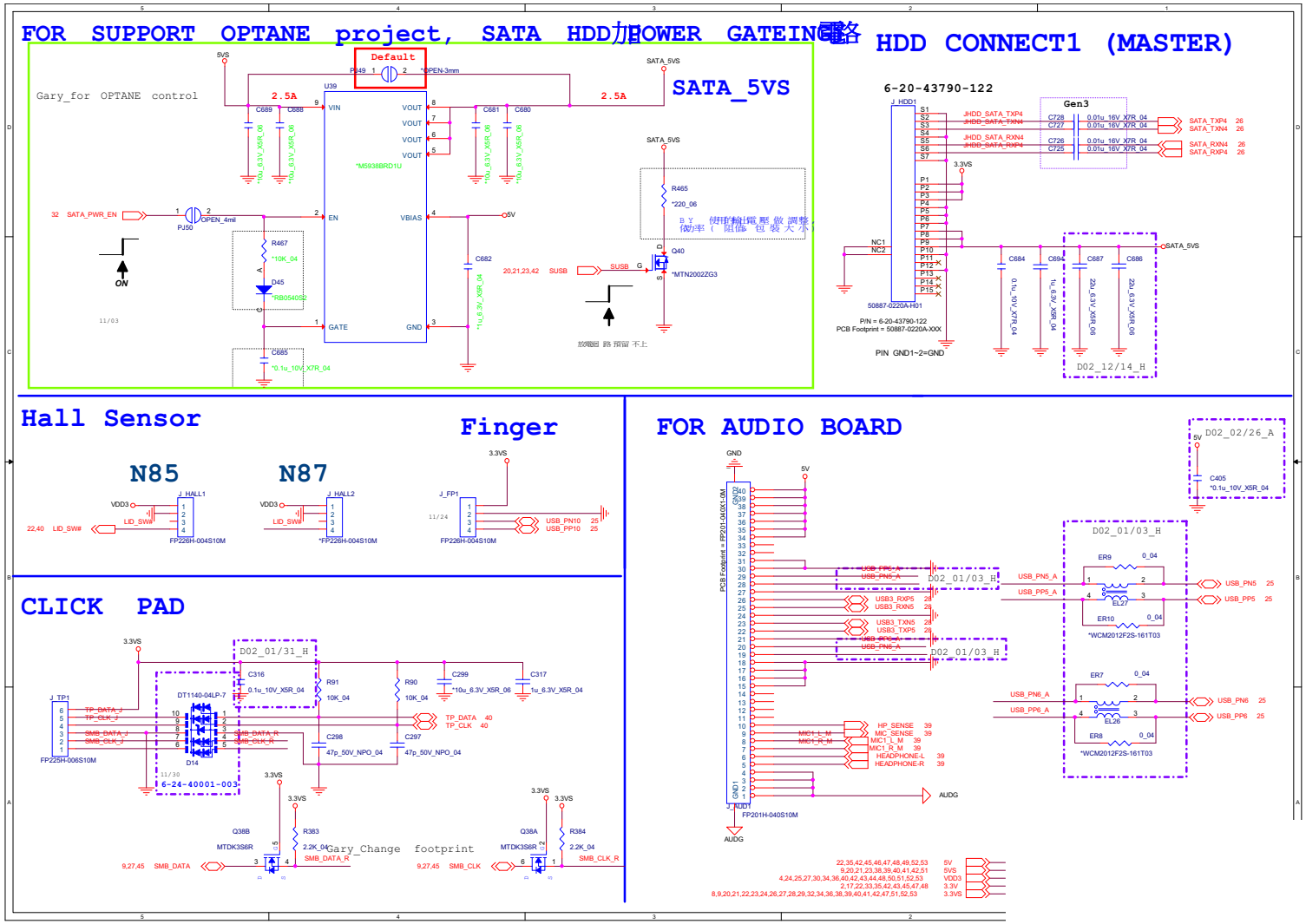

LED, CCD, TPM, Power SW Con.

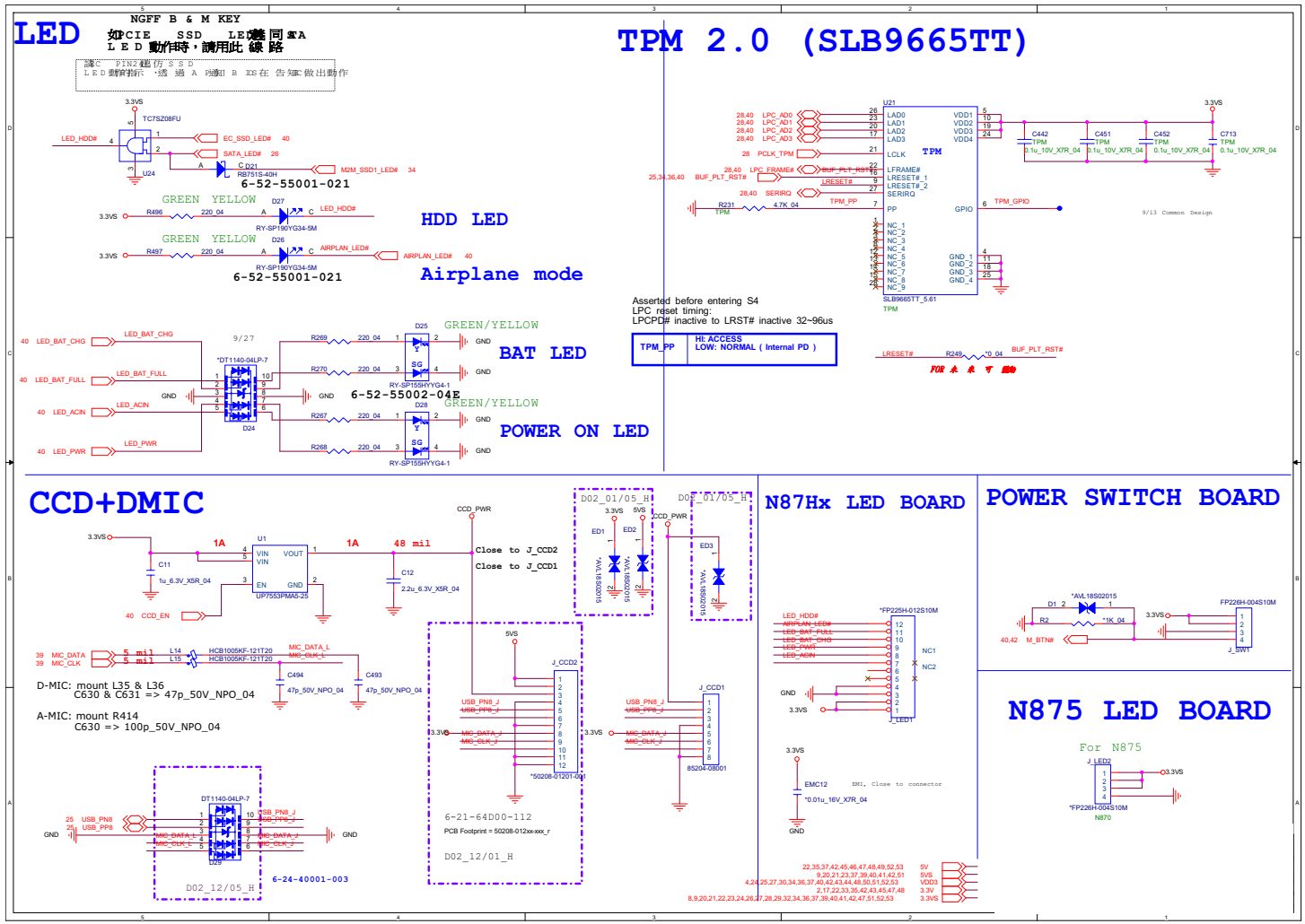

Sheet 38 of 60
LED, CCD, TPM, Power SW Con.

Audio Codec ALC269 VC2

Sheet 39 of 60
Audio Codec
ALC269 VC2

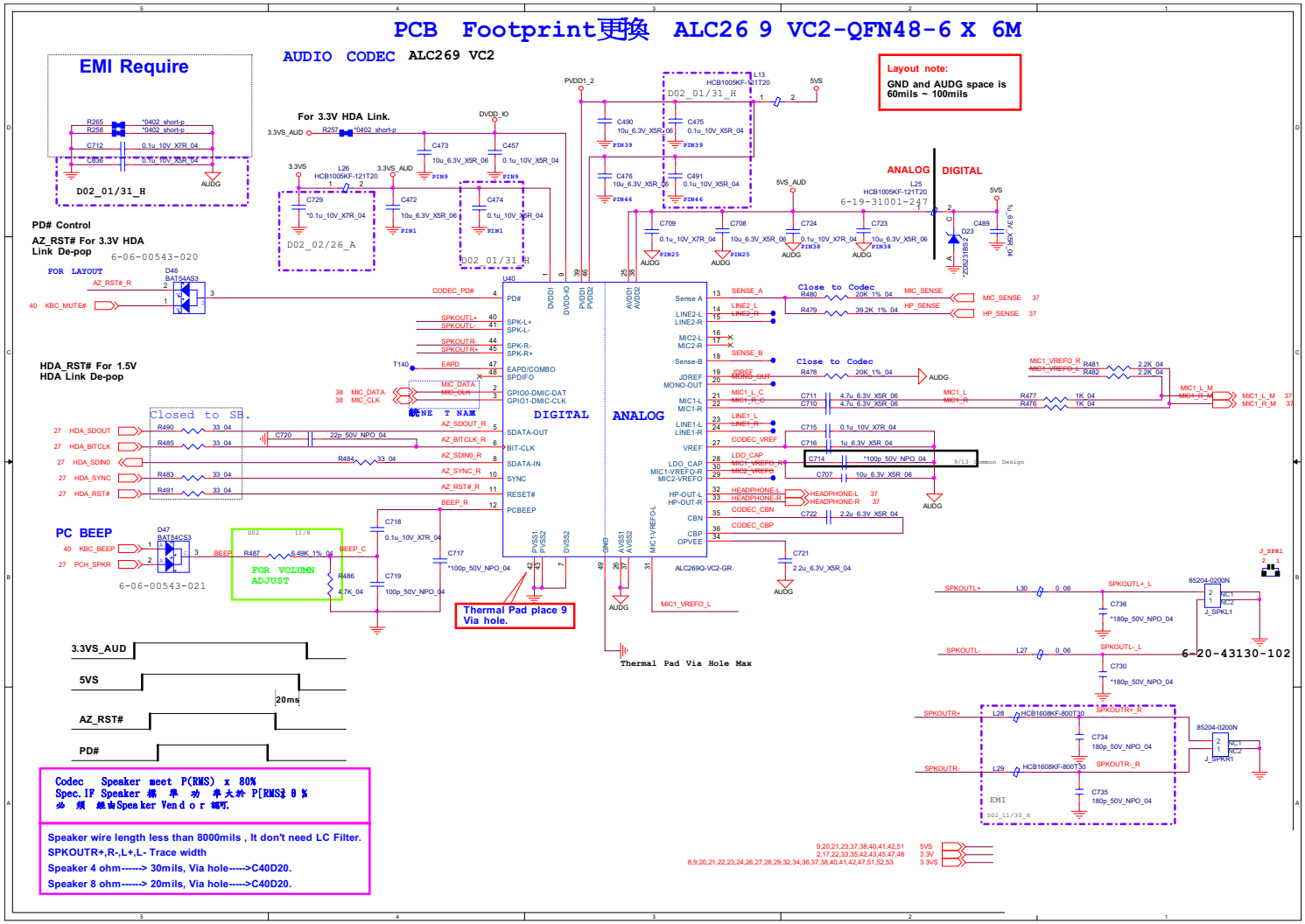

KBC-ITE IT8587

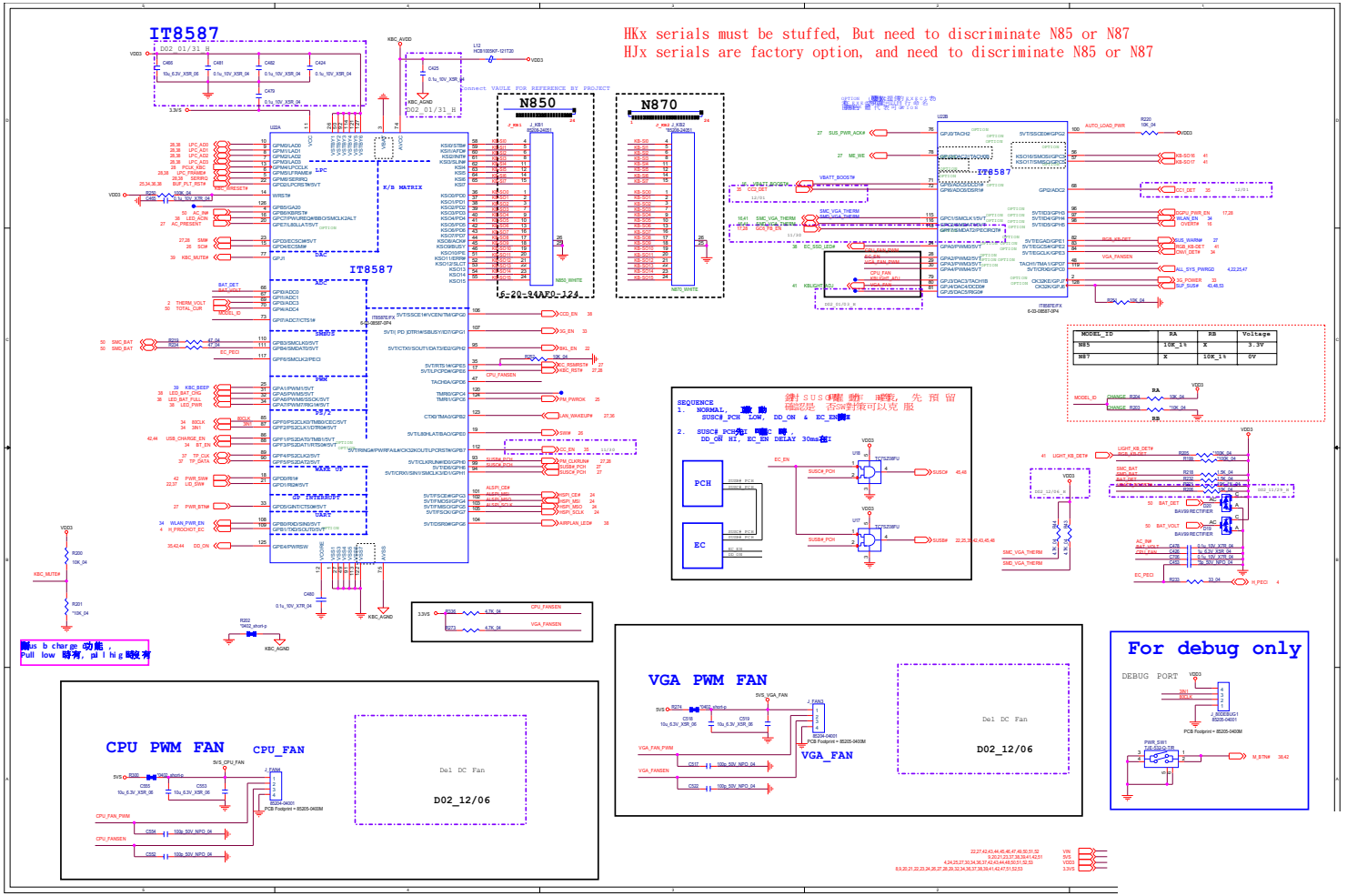

Sheet 40 of 60
KBC-ITE IT8587

RGB KB Only

Sheet 41 of 60
RGB KB Only

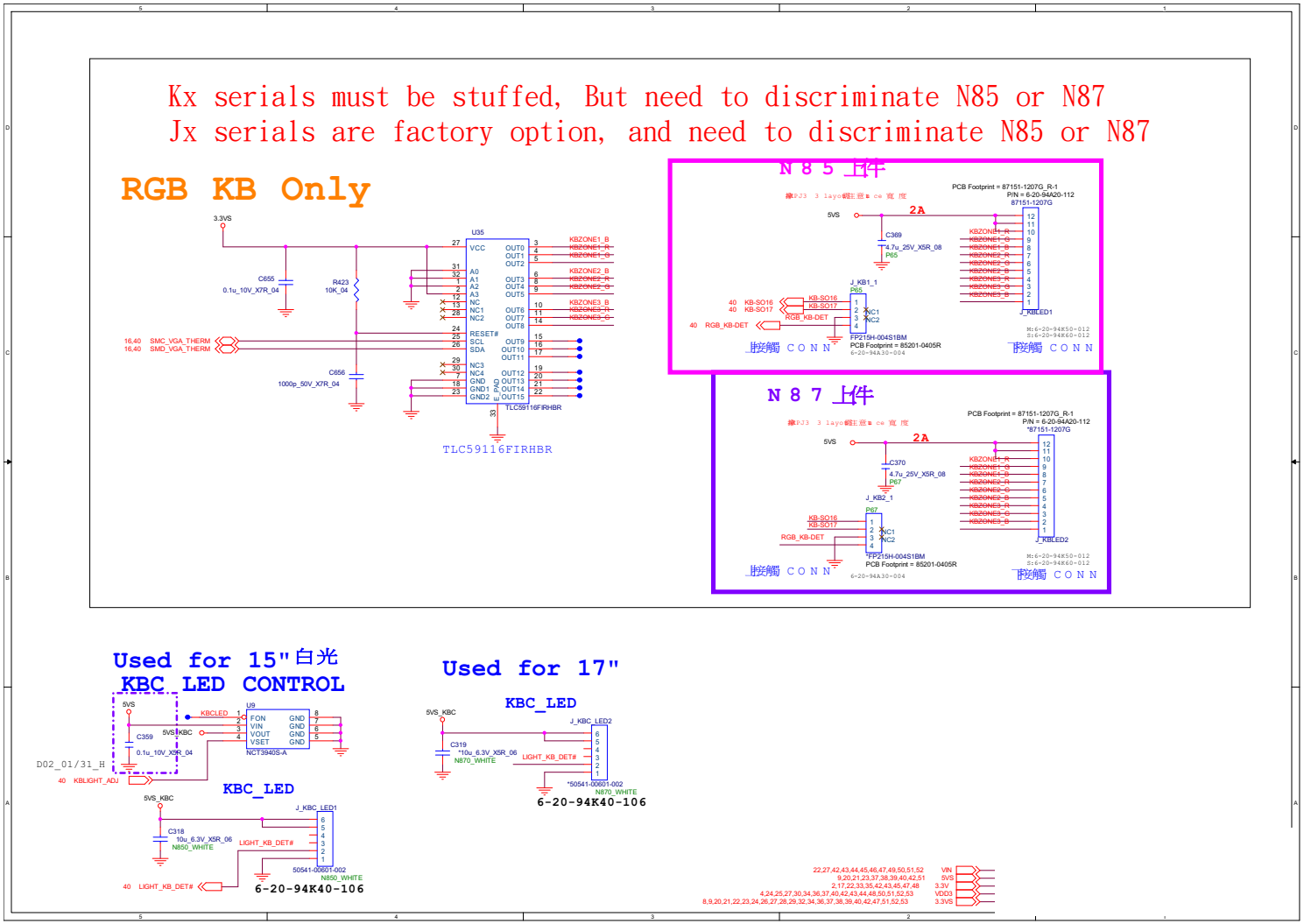

5V, 5VS, 3.3V, 3.3VS, 3.3VA

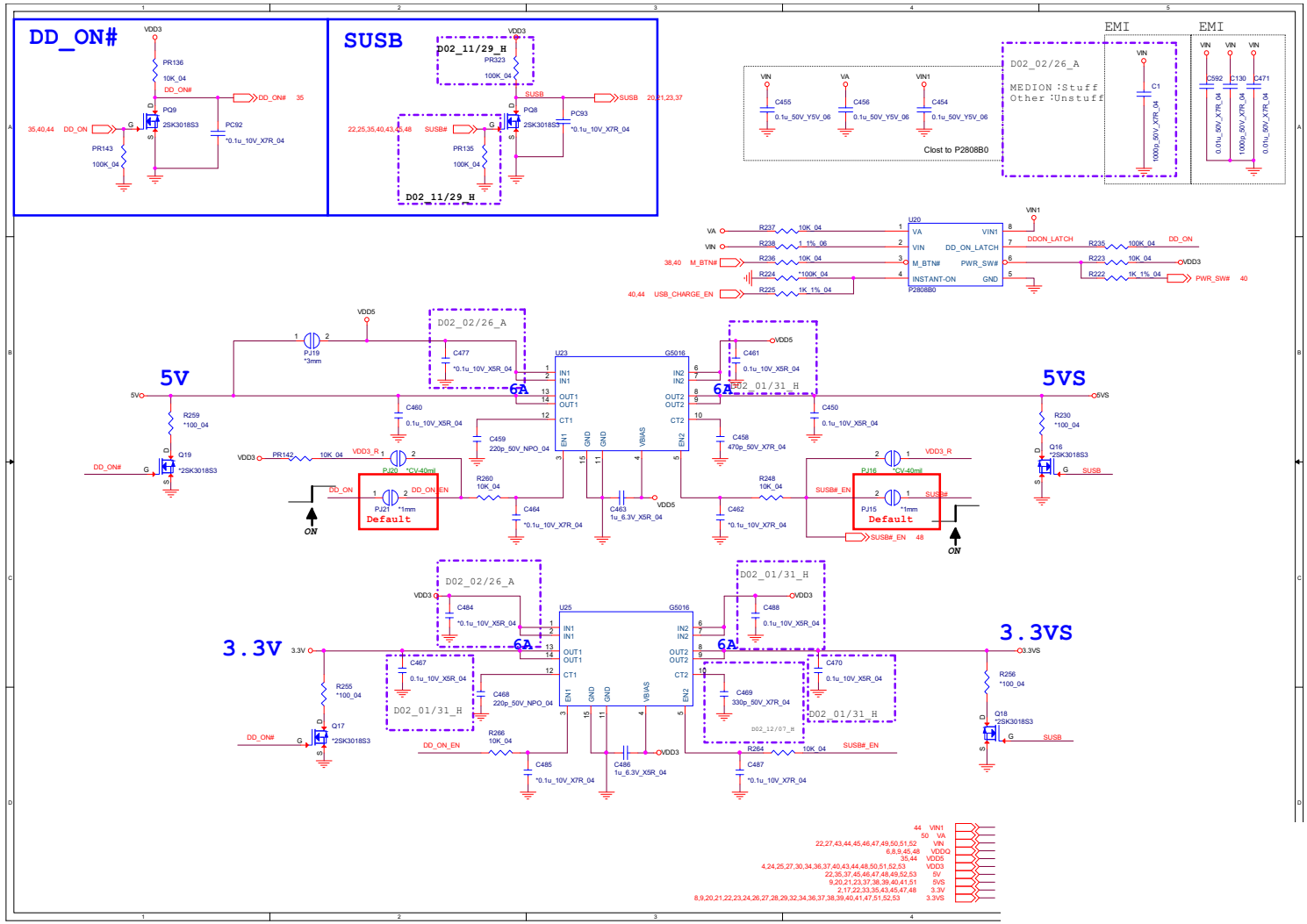

Sheet 42 of 60
5V, 5VS, 3.3V,
3.3VS, 3.3VA

VDD1.0V, VCCIO

Sheet 43 of 60
VDD1.0V, VCCIO

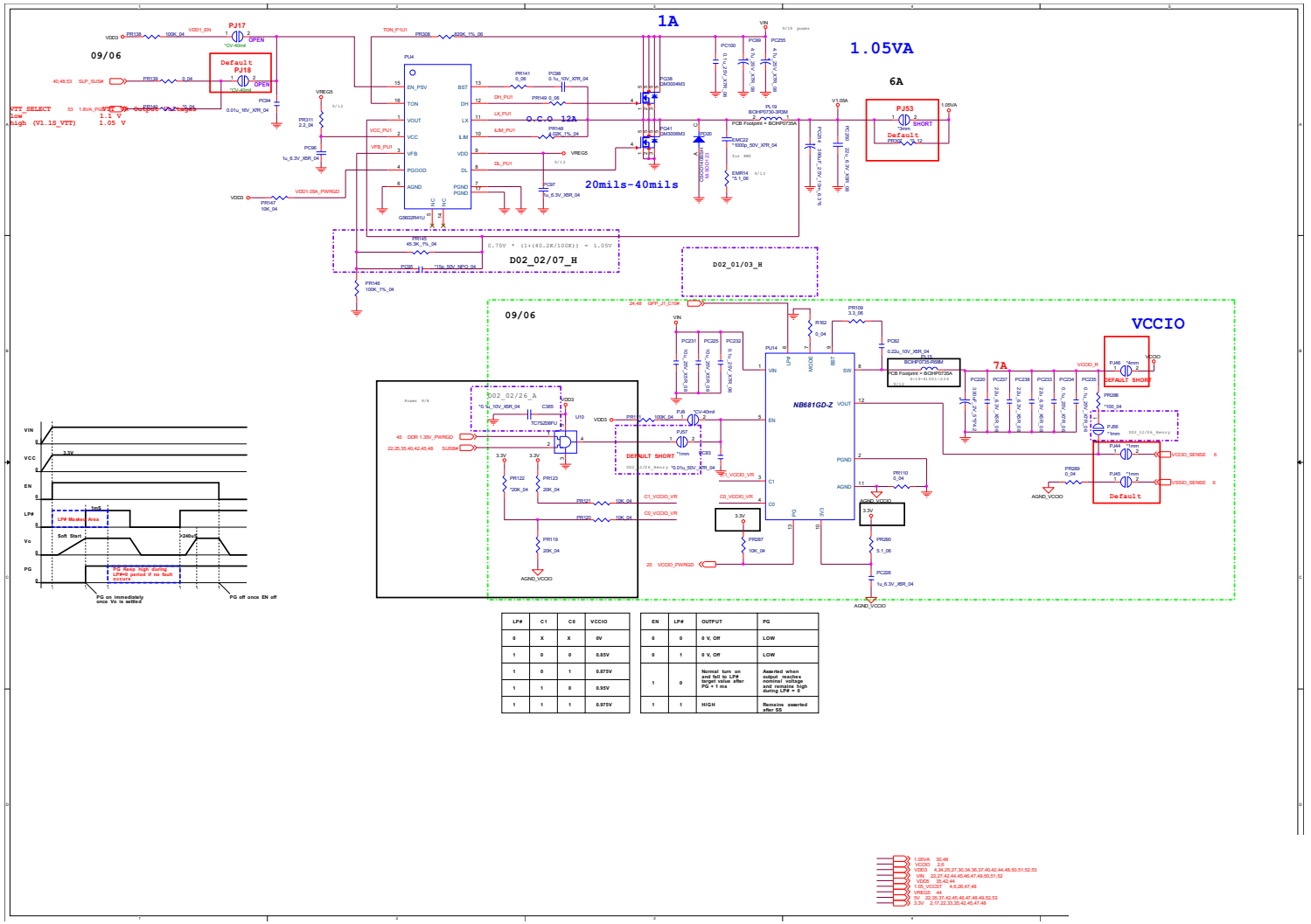

LP#	C1	C0	VCCIO
0	X	X	0V
1	0	0	0.85V
1	0	1	0.875V
1	1	0	0.95V
1	1	1	0.975V

EN	LP#	OUTPUT	PG
0	0	0 V, Off	LOW
0	1	0 V, Off	LOW
1	0	Normal turn on and fall to LP# target value after PG + 1 ms	Asserted when output reaches nominal voltage and remains high during LP# = 0
1	1	HIGH	Remains asserted after SS

VDD3, VDD5

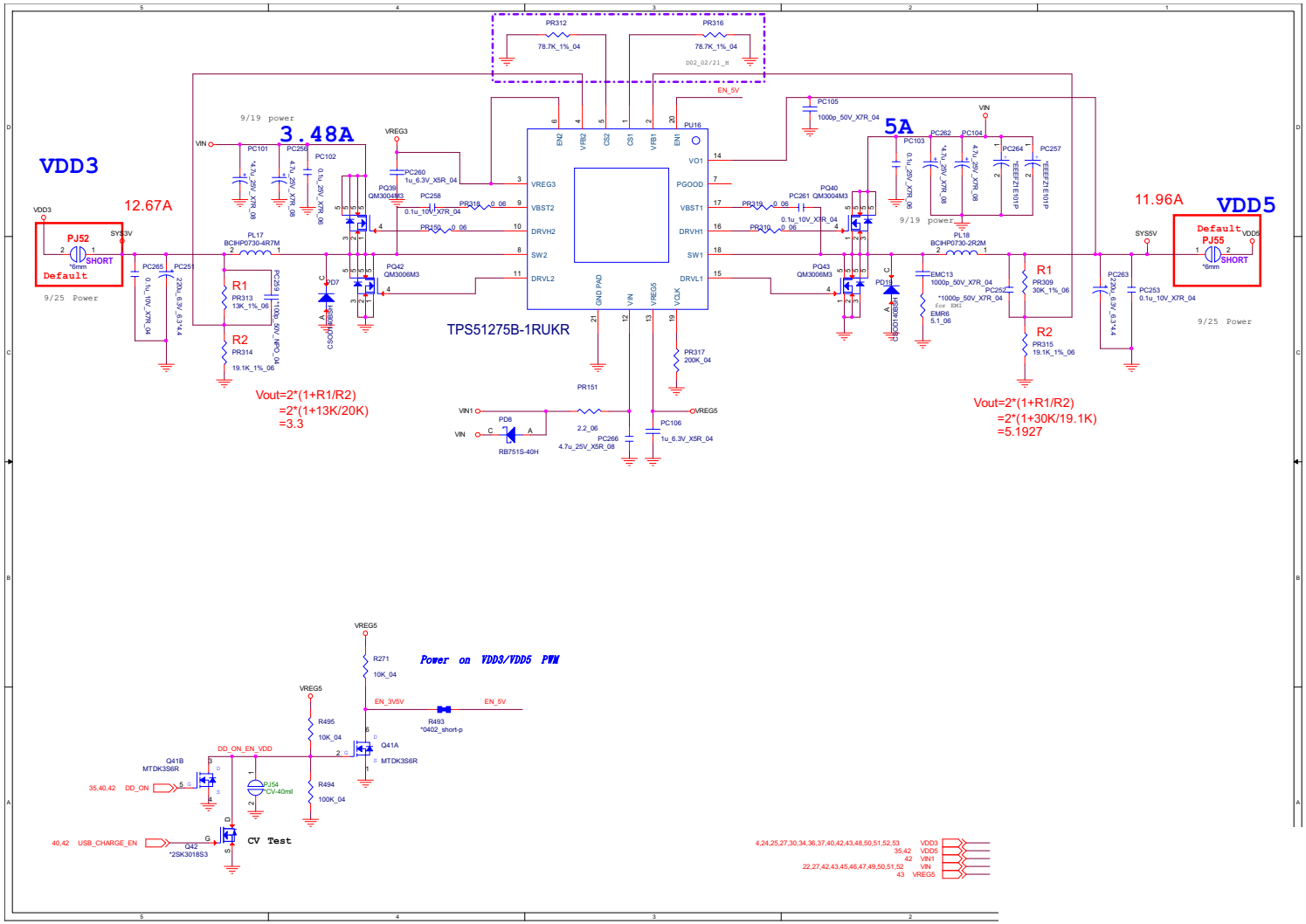

Sheet 44 of 60
VDD3, VDD5

DDR 1.2V / 0.6VS, 2.5V

Sheet 45 of 60
DDR 1.2V / 0.6VS, 2.5V

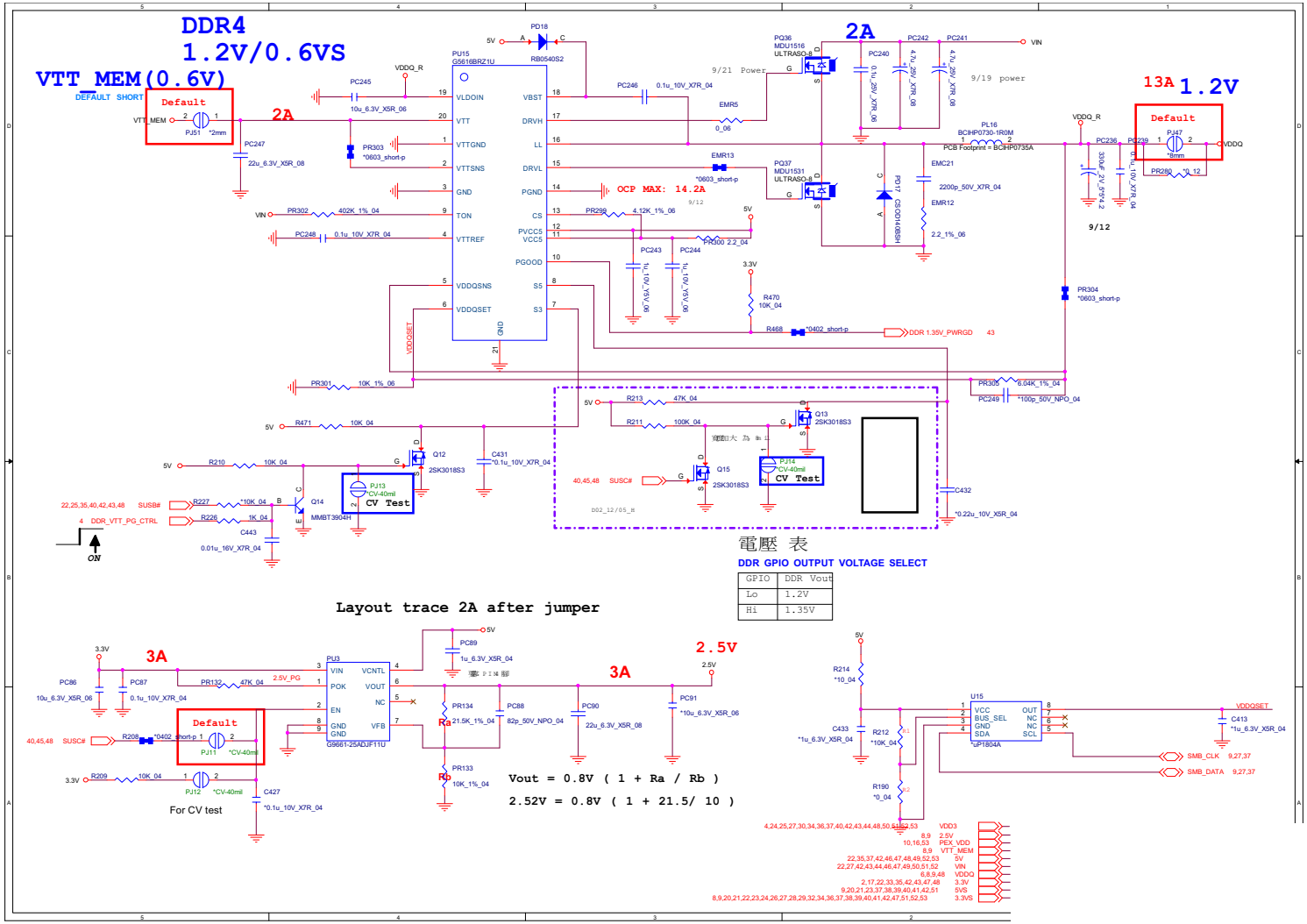

VCore, VCCGT Output Stage

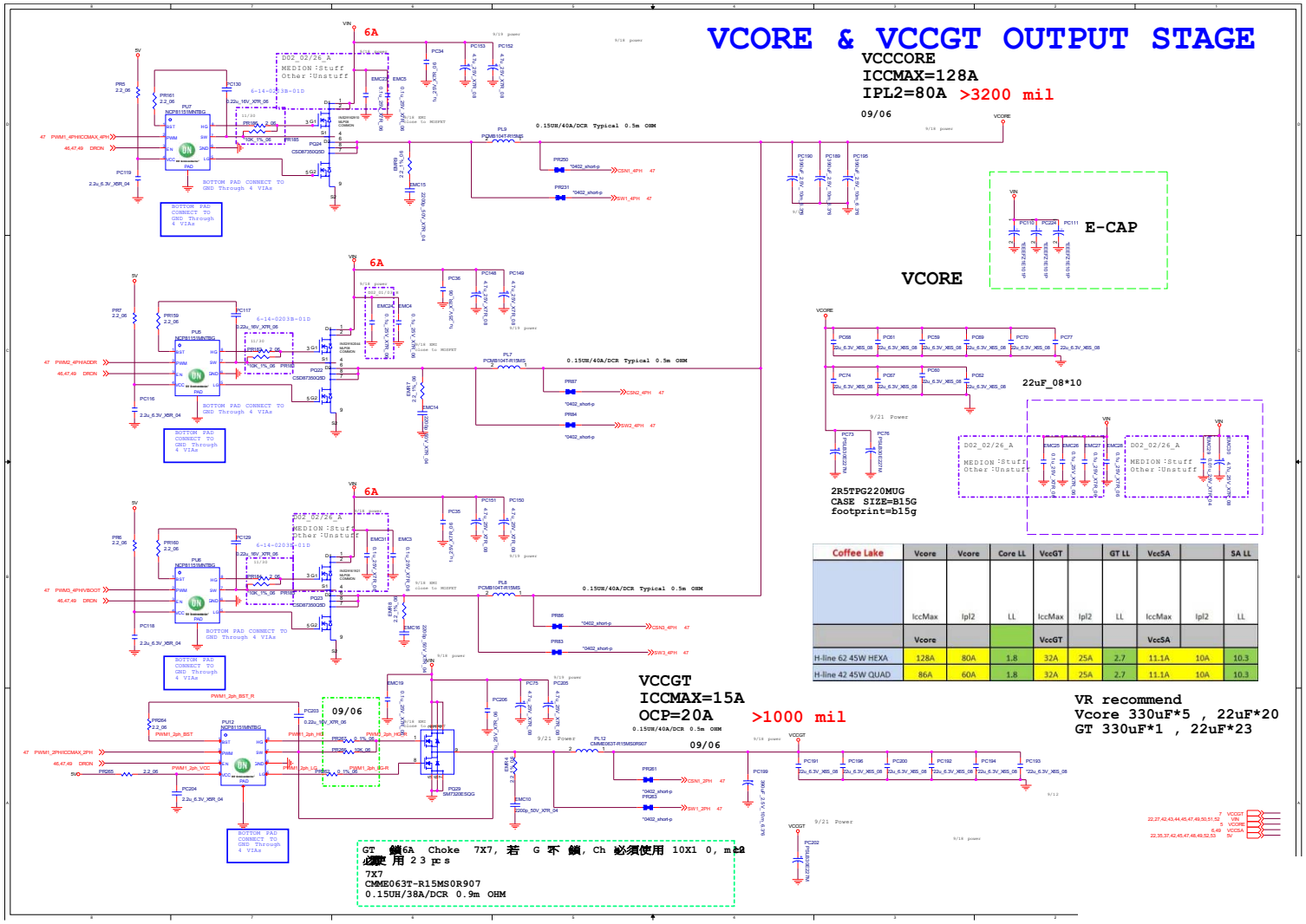

Coffee Lake	Vcore	Vcore	Core LL	VccGT		GT LL	VccSA		SA LL
	IccMax	Ipl2	LL	IccMax	Ipl2	LL	IccMax	Ipl2	LL
	Vcore			VccGT			VccSA		
H-line 62 45W HEXA	128A	80A	1.8	32A	25A	2.7	11.1A	10A	10.3
H-line 42 45W QUAD	86A	60A	1.8	32A	25A	2.7	11.1A	10A	10.3

Sheet 46 of 60
VCore, VCCGT
Output Stage

VCC_Core & VCCGT

Sheet 47 of 60
VCC_Core &
VCCGT

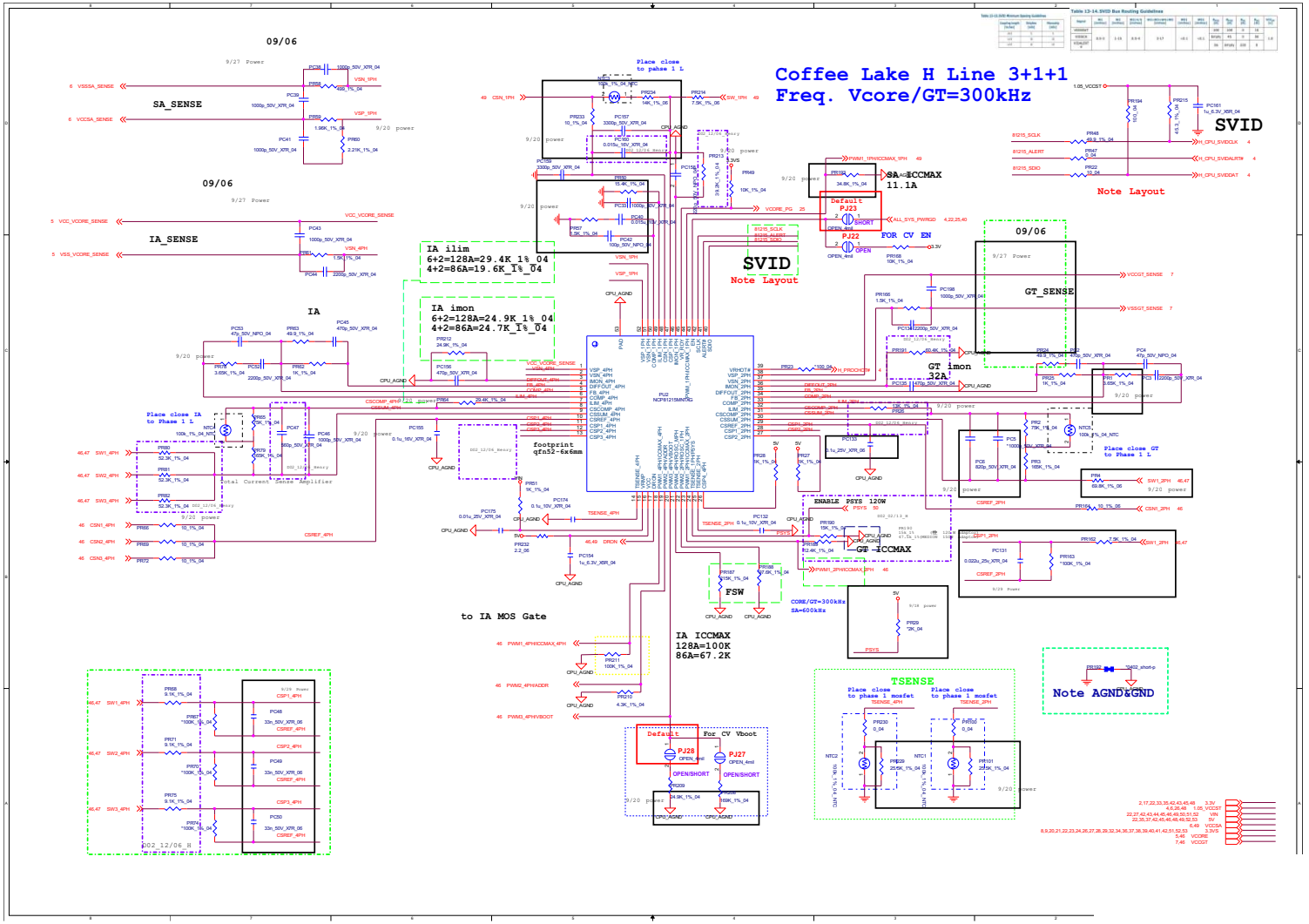

1.0DX_VCCSTG/VCCSFR_OC, 3.3VA

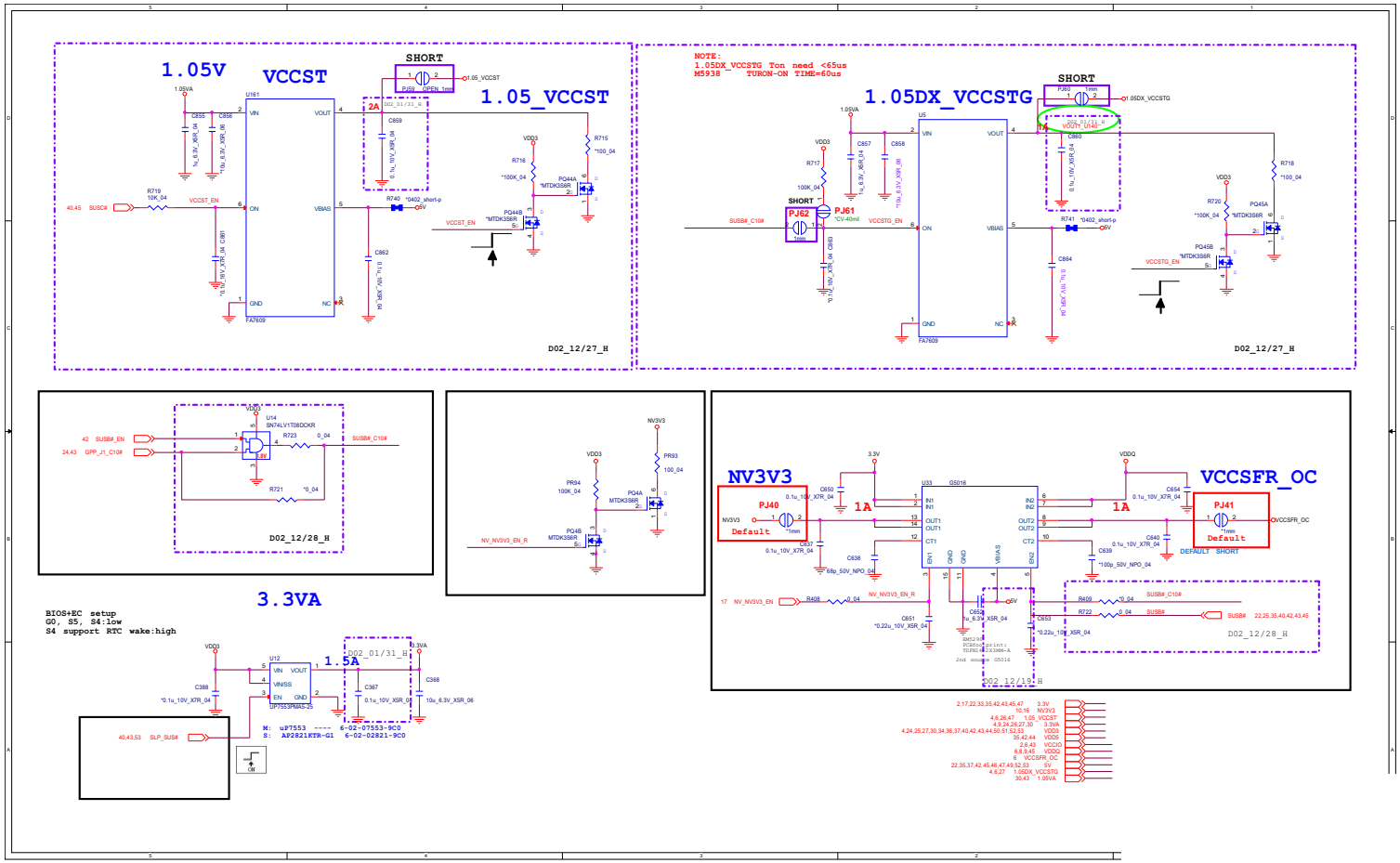

Sheet 48 of 60
1.0DX_VCCSTG/
VCCSFR_OC,
3.3VA

VCCSA

Sheet 49 of 60
VCCSA

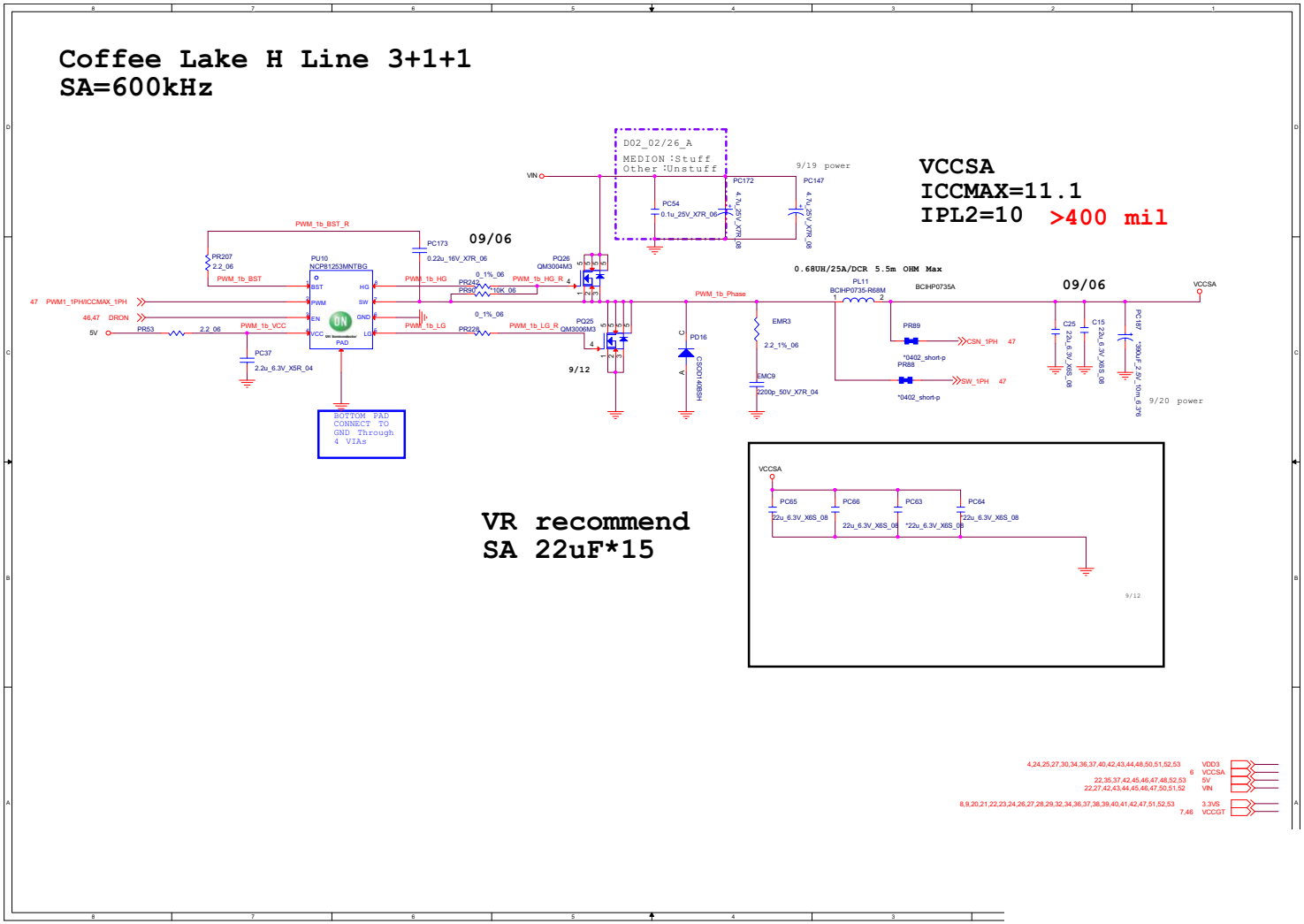

AC_In, Charger

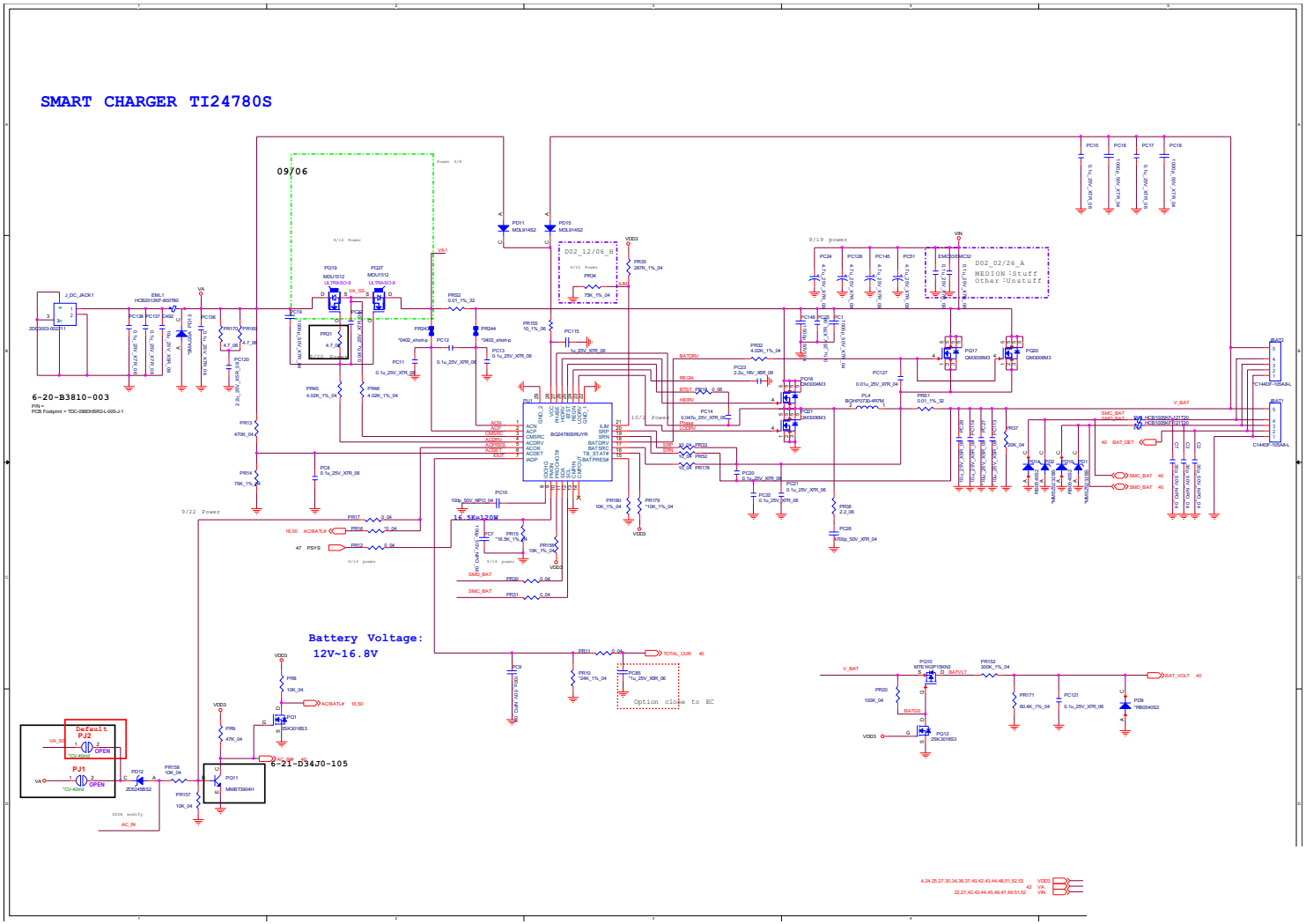

Sheet 50 of 60
AC_In, Charger

NVVDD

Sheet 51 of 60
NVVDD

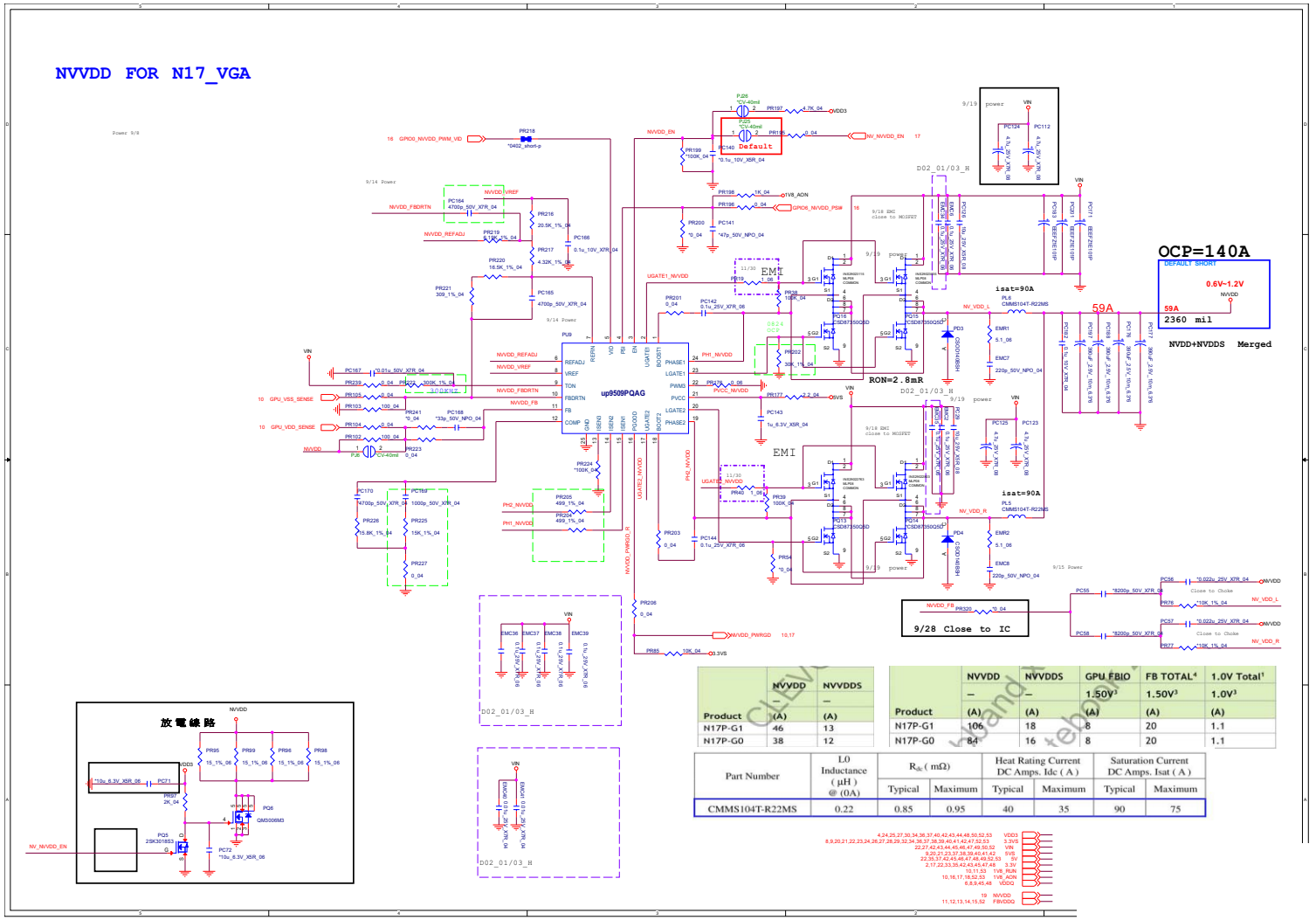

Product	NVVDD (A)	NVVDDS (A)
N17P-G1	46	13
N17P-G0	38	12

Product	NVVDD (A)	NVVDDS (A)	GPU FBIO 1.50V³ (A)	FB TOTAL⁴ 1.50V³ (A)	1.0V Total¹ 1.0V³ (A)
N17P-G1	106	18	8	20	1.1
N17P-G0	84	16	8	20	1.1

Part Number	L0 Inductance (μH) @ (0A)	R_{ds} (mΩ) Typical	R_{ds} (mΩ) Maximum	Heat Rating Current DC Amps. Idc (A) Typical	Heat Rating Current DC Amps. Idc (A) Maximum	Saturation Current DC Amps. Isat (A) Typical	Saturation Current DC Amps. Isat (A) Maximum
CMMS104T-R22MS	0.22	0.85	0.95	40	35	90	75

FBVDDQ

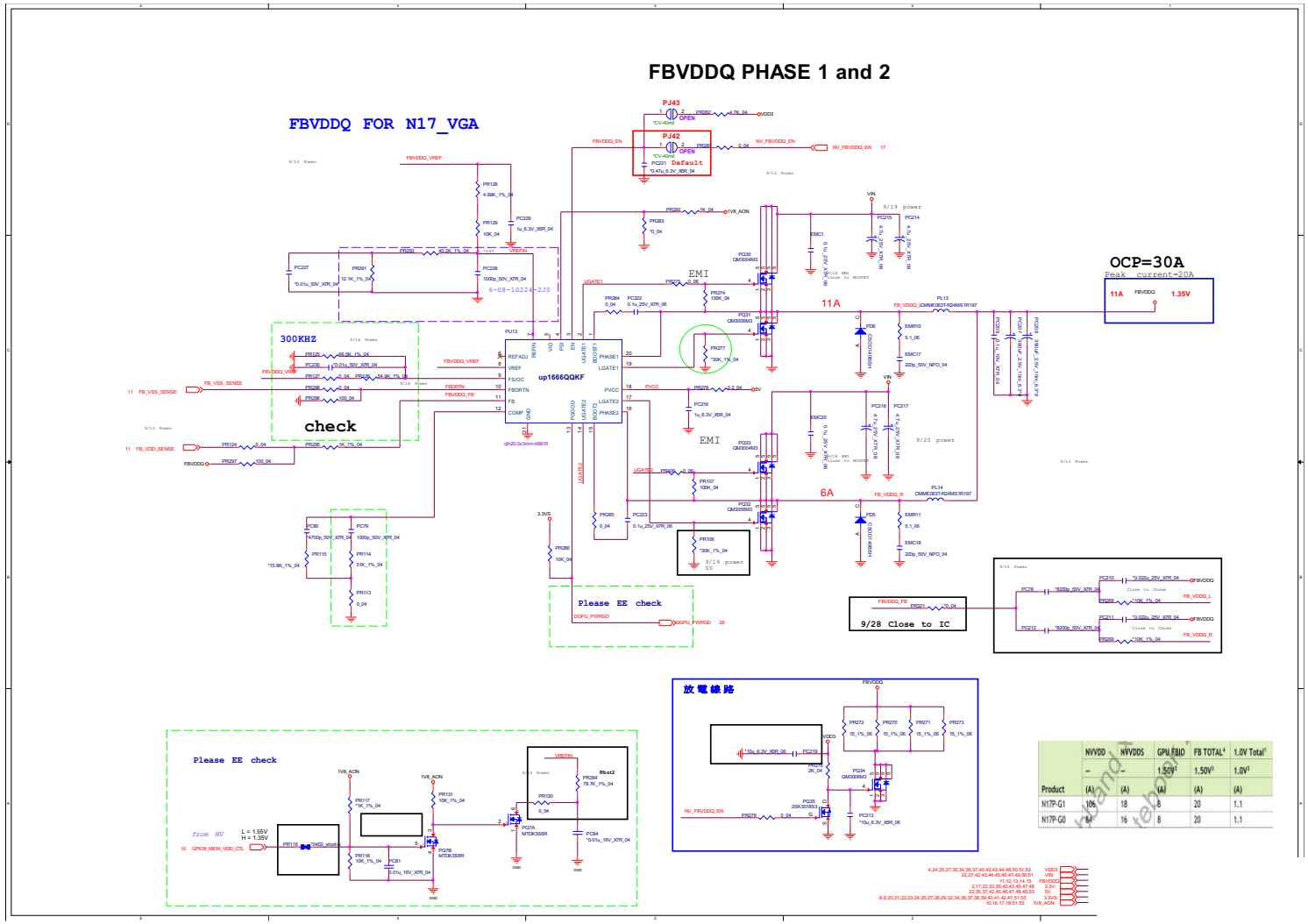

Product	NVVDD	NVVDDS	GPU FBIO	FB TOTAL[4]	1.0V Total[5]
	–	–	1.50V[1]	1.50V[2]	1.0V[3]
	(A)	(A)	(A)	(A)	(A)
N17P-G1	106	18	8	20	1.1
N17P-G0	84	16	8	20	1.1

Sheet 52 of 60
FBVDDQ

PEX_VDD/3V3/1.8V

Sheet 53 of 60
PEX_VDD/3V3/1.8V

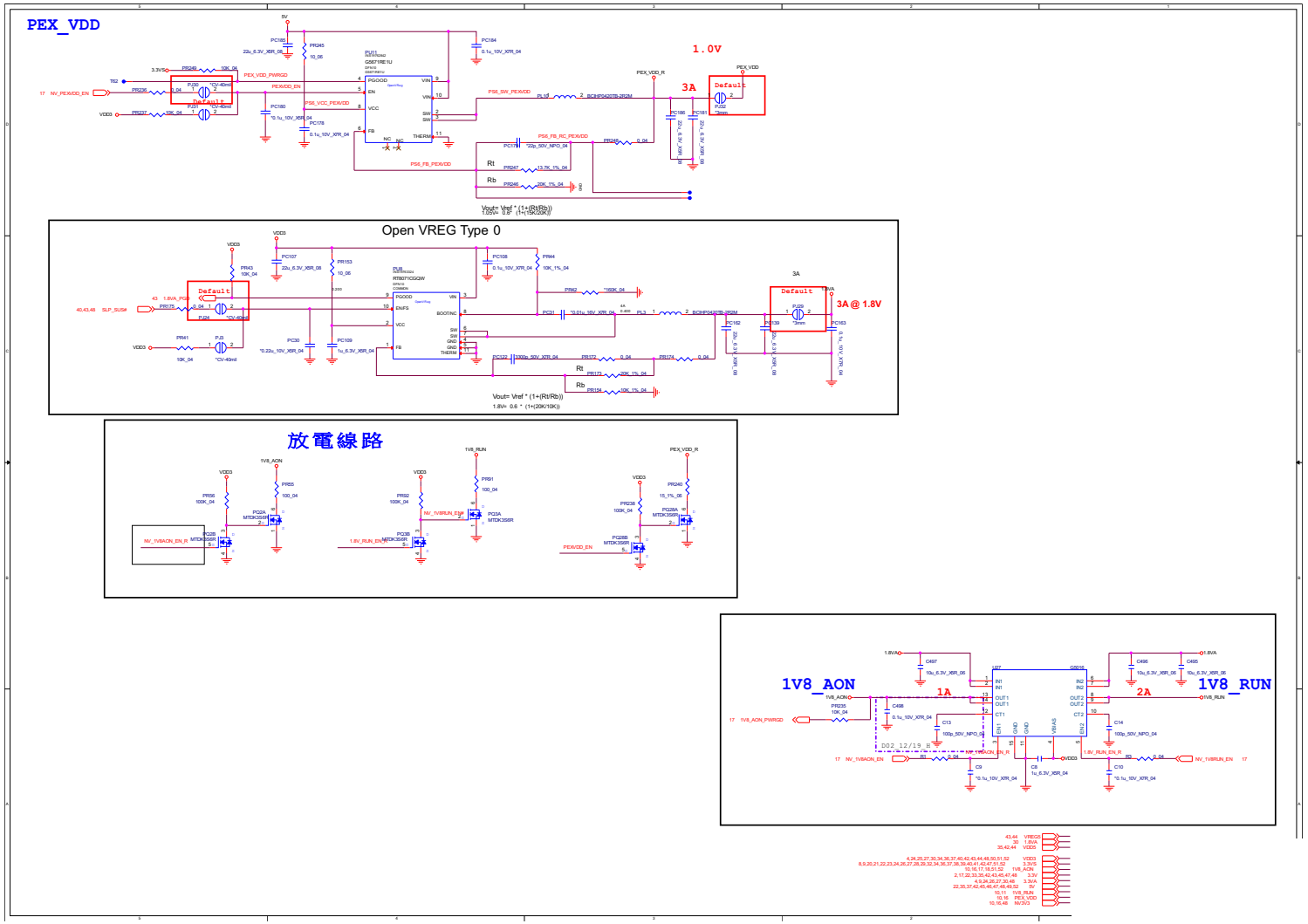

Audio Board

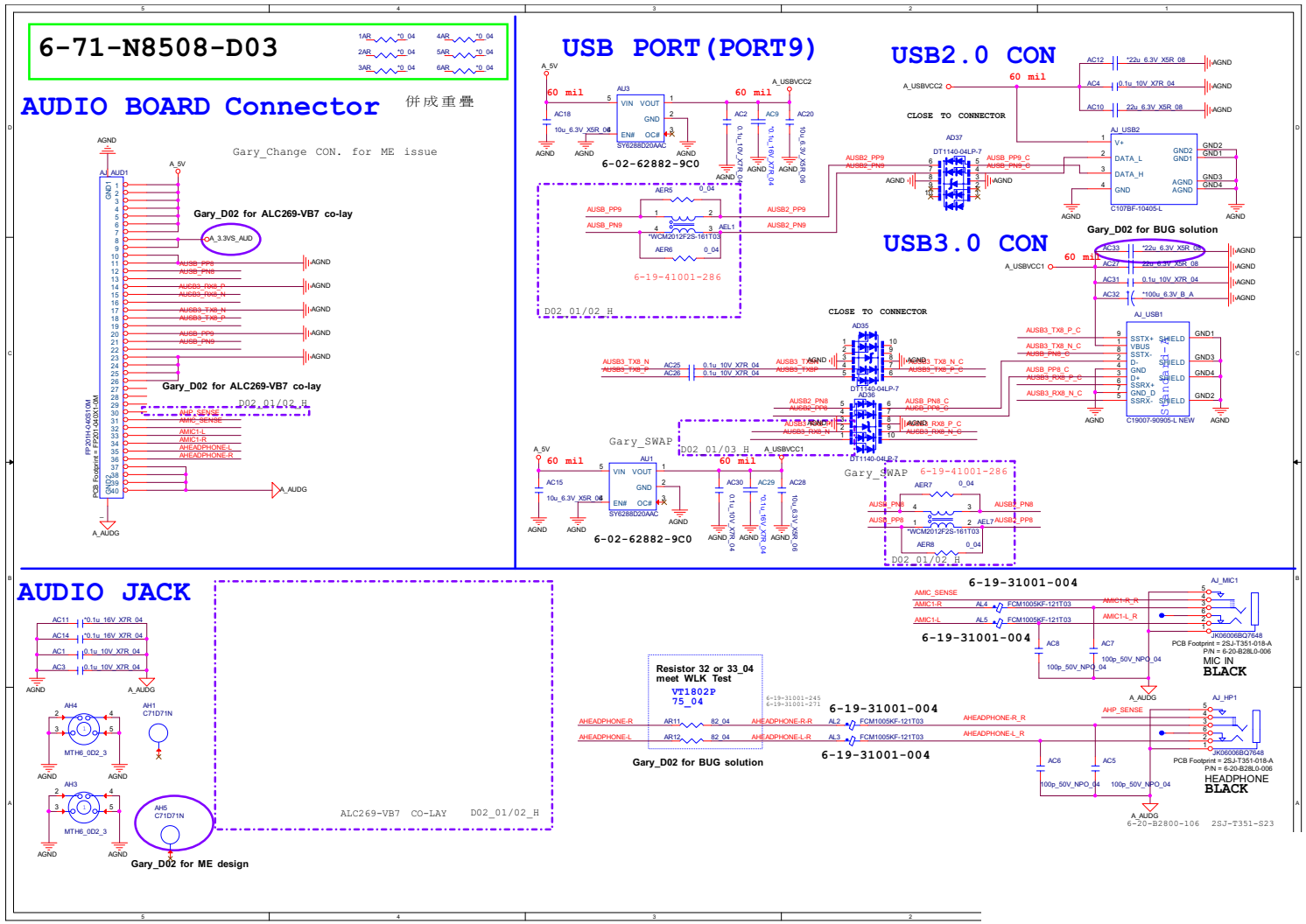

Sheet 54 of 60
Audio Board

Power Switch Board

Sheet 55 of 60
Power Switch Board

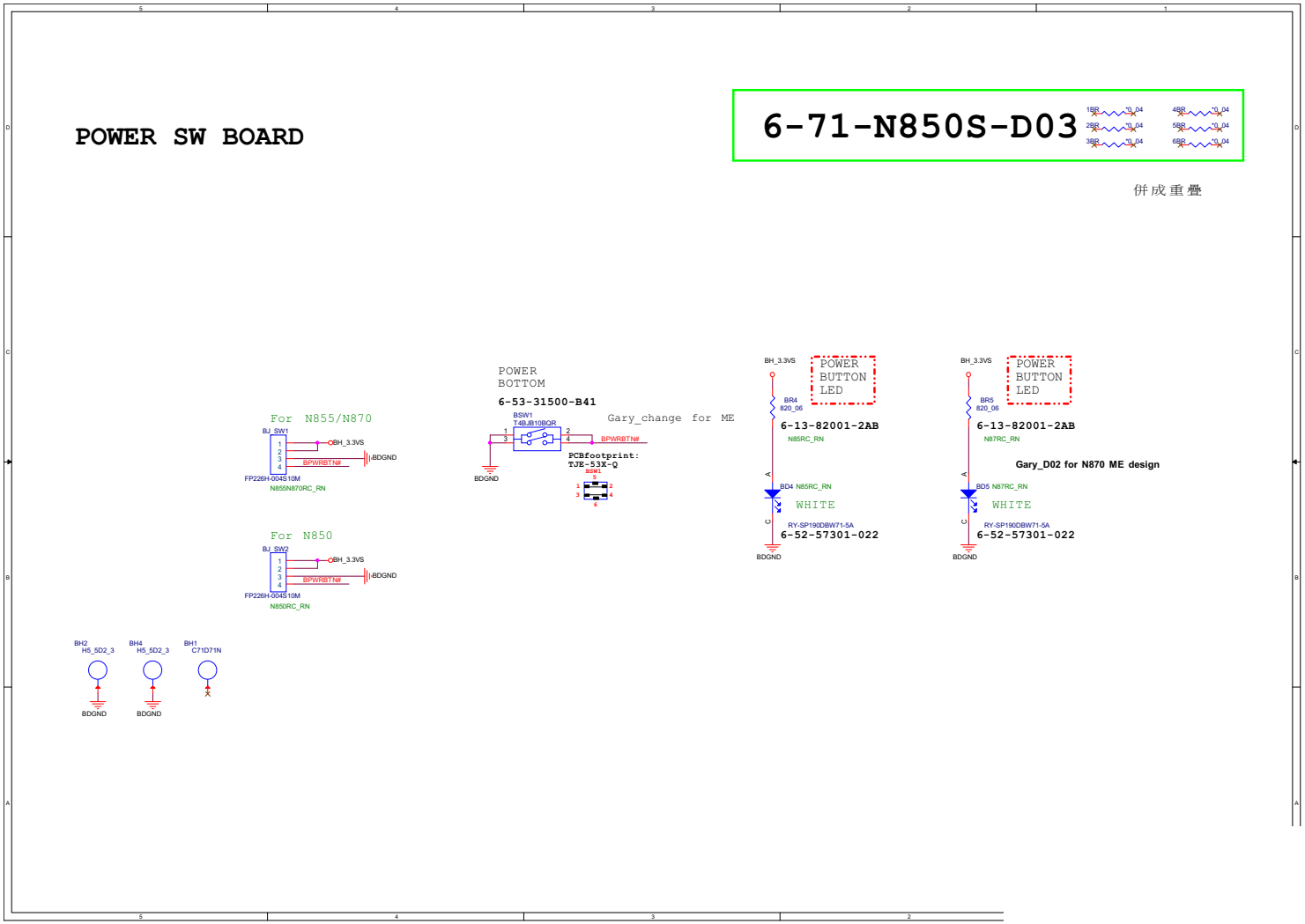

Hall Sensor Board

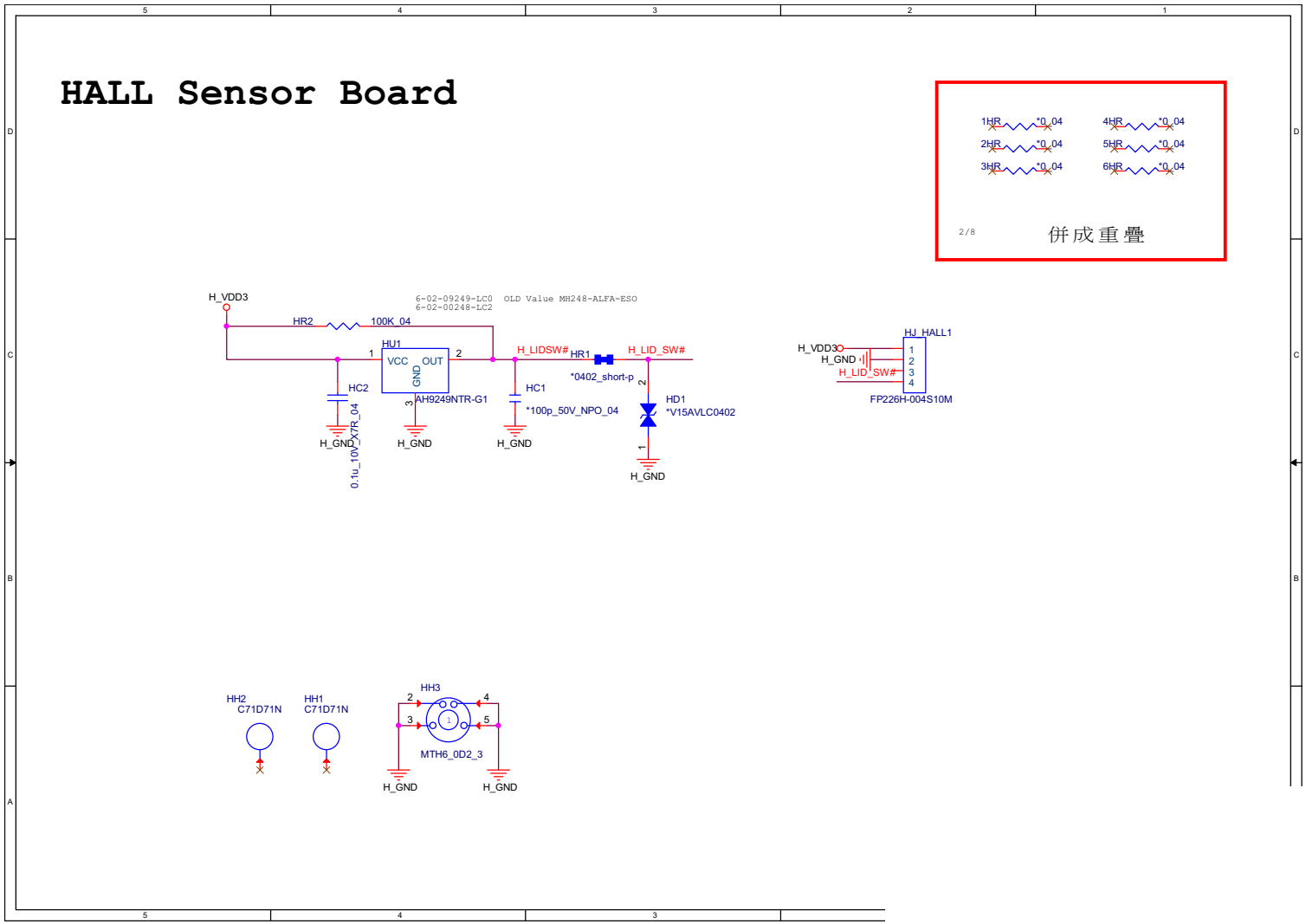

Sheet 56 of 60
Hall Sensor Board

Click Board

Sheet 57 of 60
Click Board

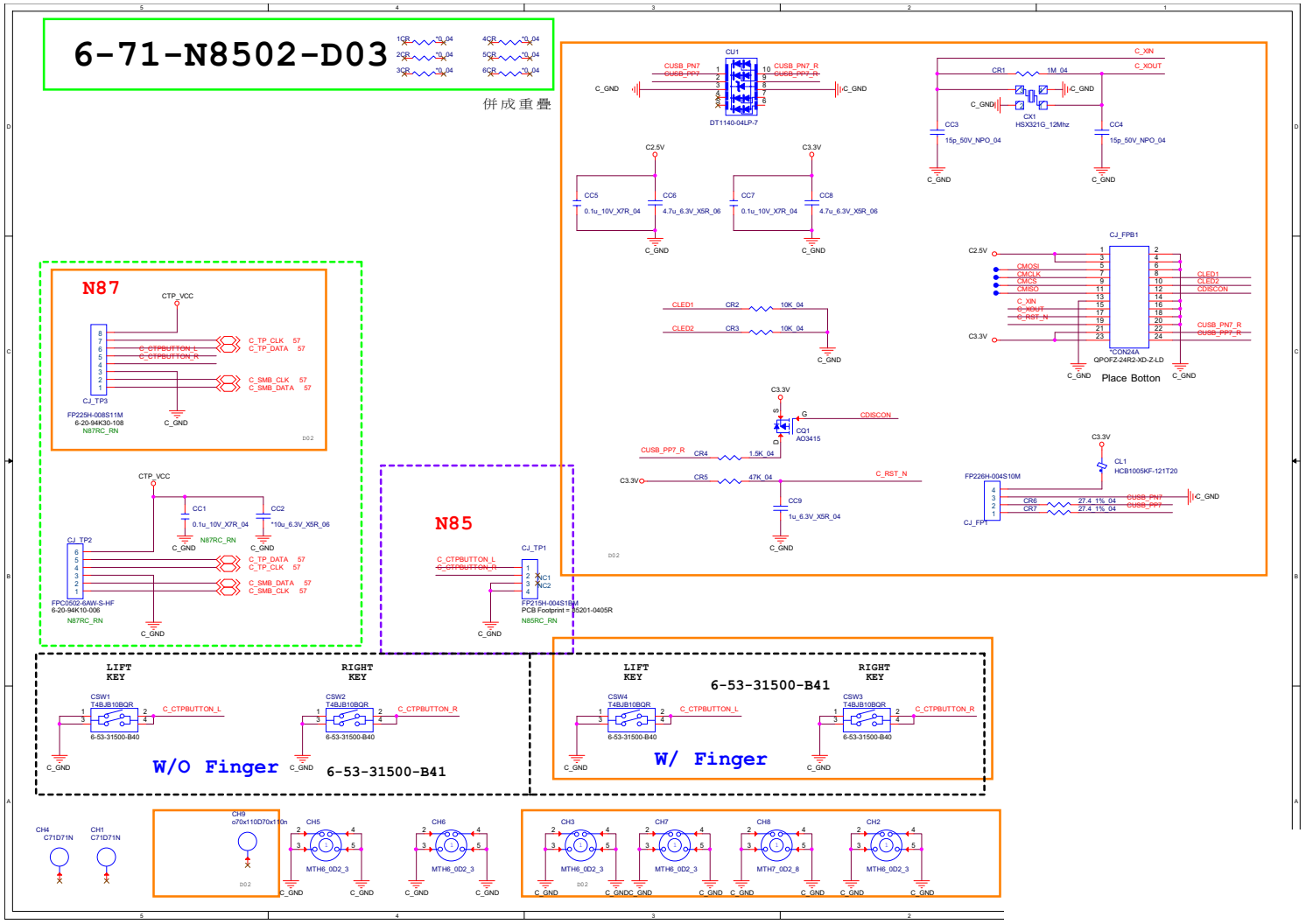

LED Board

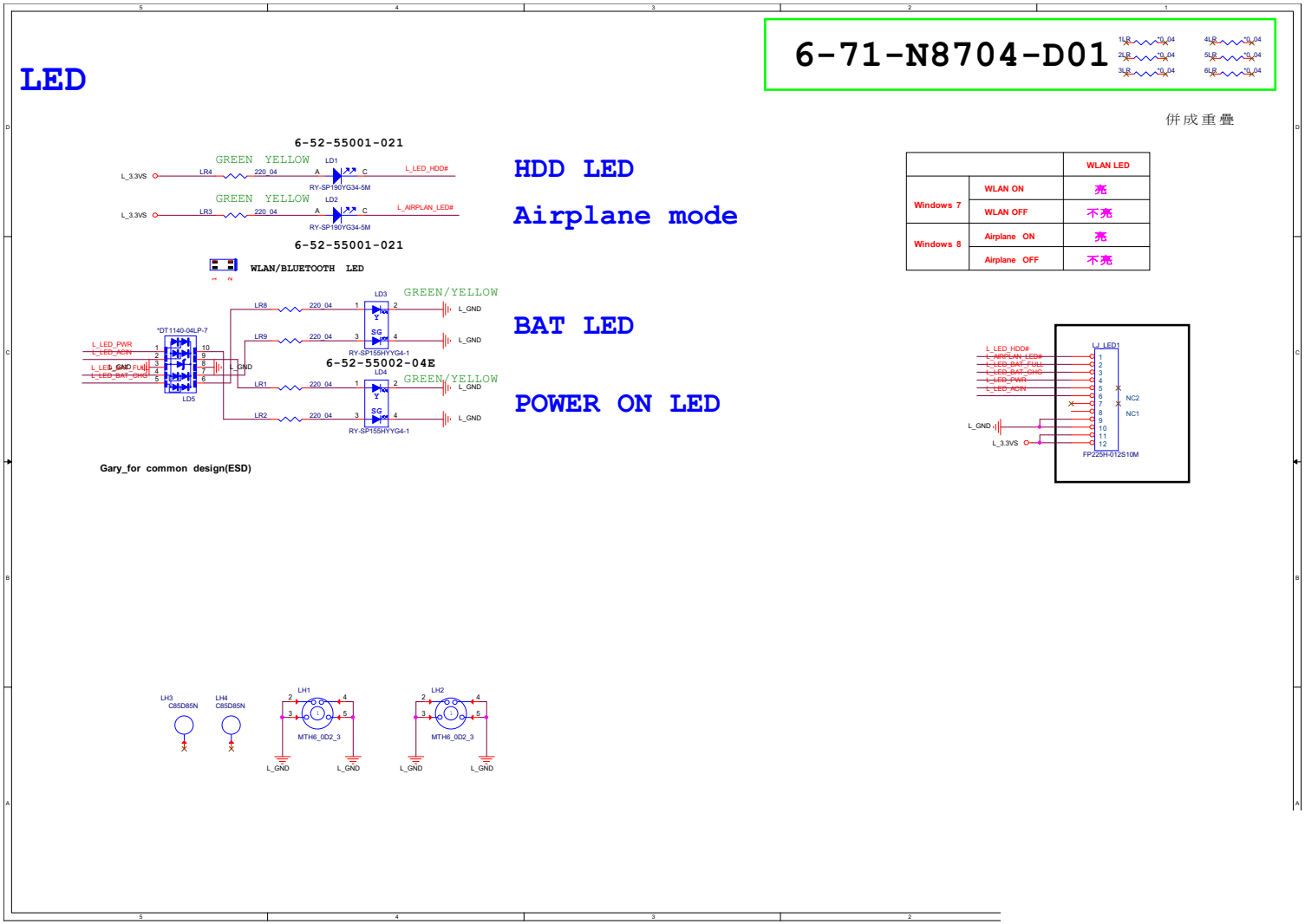

Sheet 58 of 60
LED Board

Finger Print Board

Sheet 59 of 60
FingePrint Board

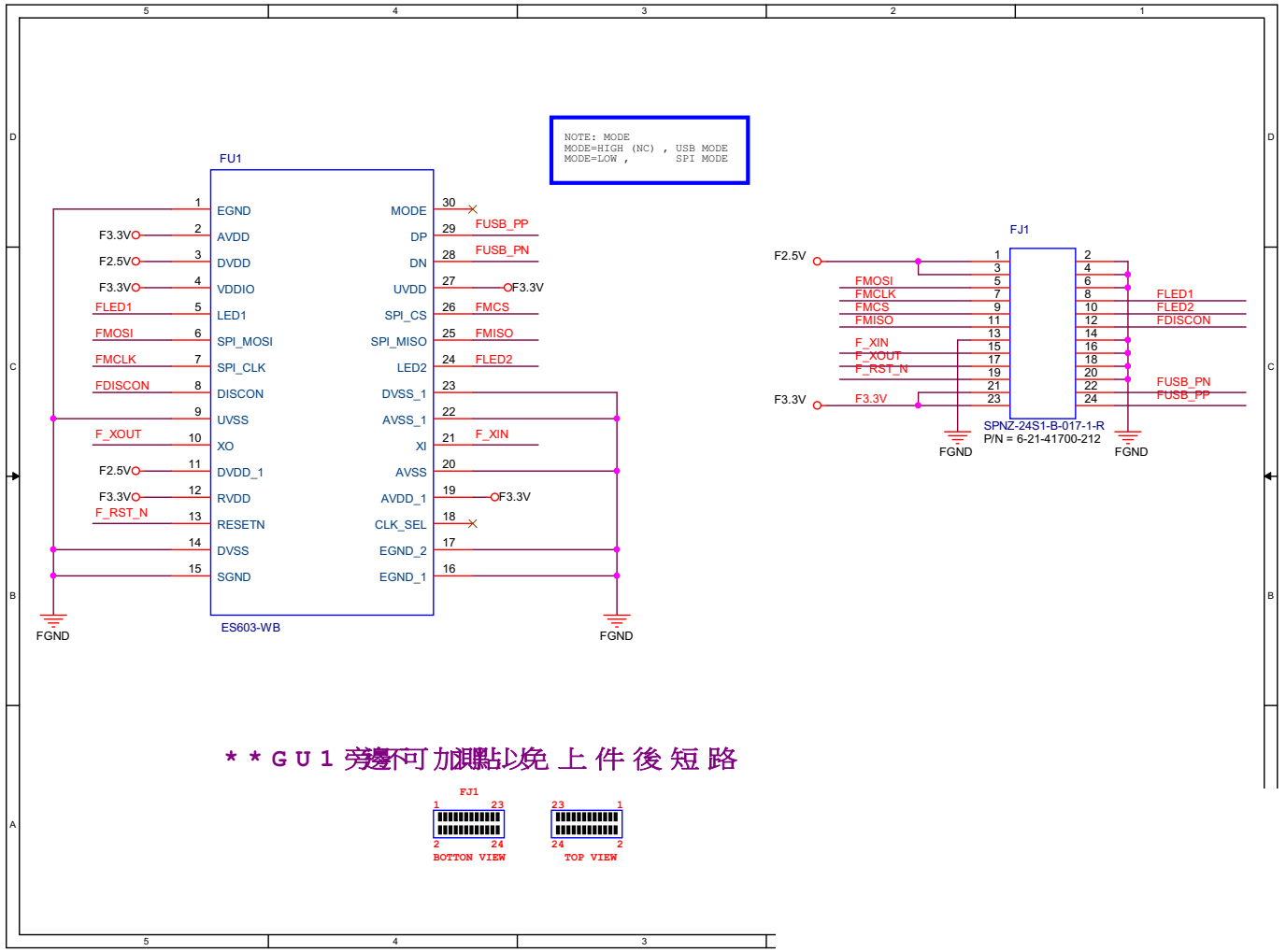

Power Sequence

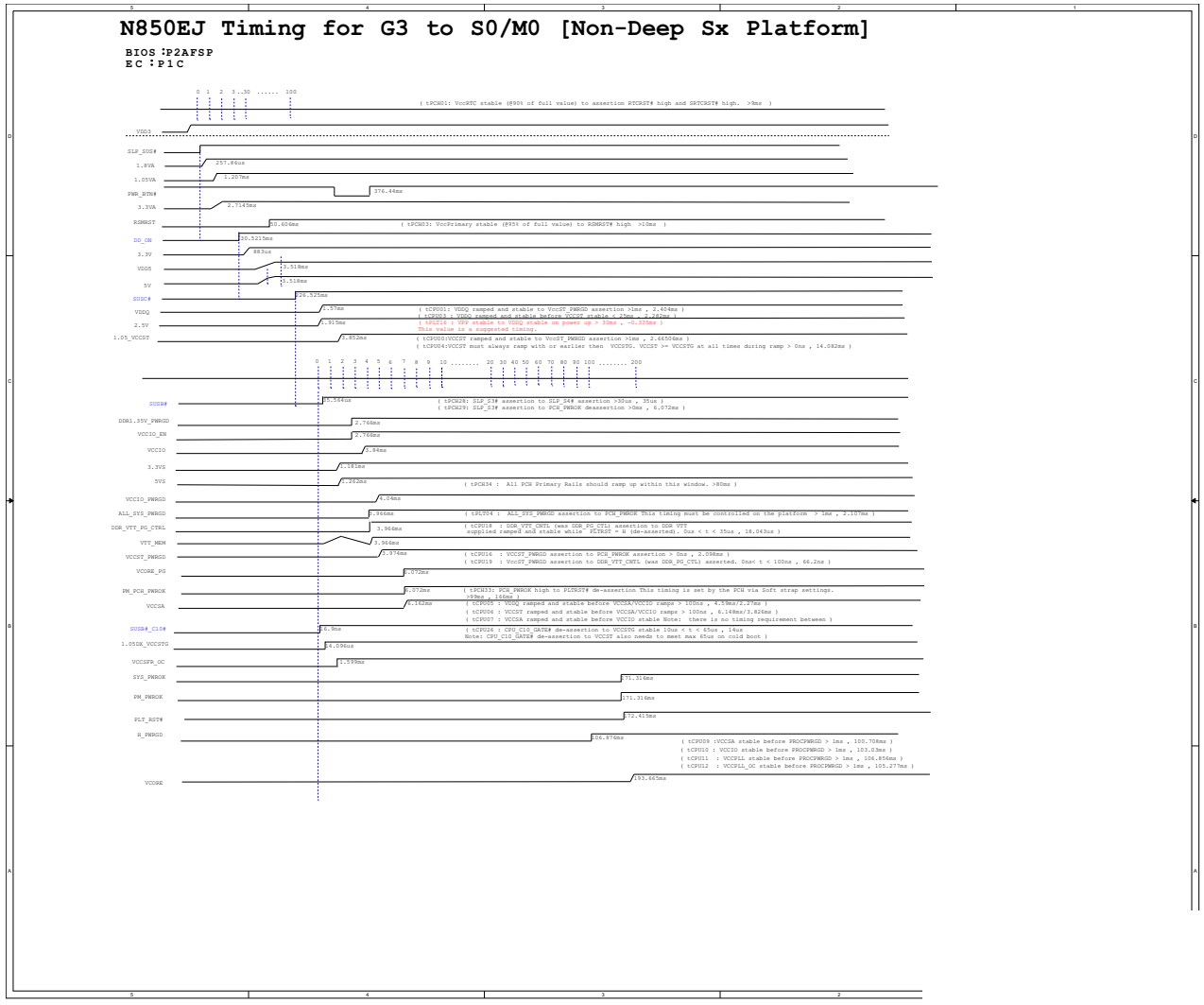

Sheet 60 of 60
Power Sequence

Appendix C:Updating the FLASH ROM BIOS

To update the FLASH ROM BIOS, you must:

- Download the BIOS update from the web site.
- Unzip the files onto a bootable CD/DVD/USB Flash Drive.
- Reboot your computer from an external CD/DVD/USB Flash Drive.
- Use the flash tools to update the flash BIOS using the commands indicated below.
- Restart the computer booting from the HDD and press **F2** at startup enter the BIOS.
- Load setup defaults from the BIOS and save the default settings and exit the BIOS to restart the computer.
- After rebooting the computer you may restart the computer again and make any required changes to the default BIOS settings.

Download the BIOS

1. Go to **www.clevo.com.tw** and point to **E-Services** and click **E-Channel**.
2. Use your user ID and password to access the appropriate download area (BIOS), and download the latest BIOS files (the BIOS file will be contained in a batch file that may be run directly once unzipped) for your computer model (**see sidebar for important information on BIOS versions**).

Unzip the downloaded files to a bootable CD/DVD or USB Flash drive

1. Insert a bootable CD/DVD/USB flash drive into the CD/DVD drive/USB port of the computer containing the downloaded files.
2. Use a tool such as Winzip or Winrar to unzip all the BIOS files and refresh tools to your bootable CD/DVD/USB flash drive (you may need to create a bootable CD/DVD with the files using a 3rd party software).

Set the computer to boot from the external drive

1. With the bootable CD/DVD/USB flash drive containing the BIOS files in your CD/DVD drive/USB port, restart the computer and press **F2** (in most cases) to enter the BIOS.
2. Use the arrow keys to highlight the **Boot** menu.
3. Use the "+" and "-" keys to move boot devices up and down the priority order.
4. Make sure that the CD/DVD drive/USB flash drive is set first in the boot priority of the BIOS.
5. Press **F4** to save any changes you have made and exit the BIOS to restart the computer.

BIOS Version

Make sure you download the latest correct version of the BIOS appropriate for the computer model you are working on.

You should only download BIOS versions that are V1.0X.XX or higher as appropriate for your computer model.

Note that BIOS versions are not backward compatible and therefore **you may not downgrade your BIOS to an older version** after upgrading to a later version (e.g if you upgrade a BIOS to ver 1.0X.05, you **MAY NOT** then go back and flash the BIOS to ver 1.0X.04).

Use the flash tools to update the BIOS

1. Make sure you are not loading any memory management programs such as HIMEM by holding the **F8** key as you see the message "**EFI Shell**". You will then be prompted to give "**Y**" or "**N**" responses to the programs being loaded by EFI Shell. Choose "N" for any memory management programs.
2. You should now see DISK **fsX**:\> (X is the designated drive number for the CD/DVD drive/USB flash drive).
3. **Type the following command**:

   fsX:\> Flash.nsh

4. The utility will then proceed to flash the BIOS.
5. You should then be prompted to press any key to restart the system or turn the power off, and then on again but make sure you remove the CD/DVD/USB flash drive from the CD/DVD drive/USB port before the computer restarts.

Restart the computer (booting from the HDD)

1. With the CD/DVD/USB flash drive removed from the CD/DVD drive/USB port the computer should restart from the HDD.
2. Press **F2** as the computer restarts to enter the BIOS.
3. Use the arrow keys to highlight the **Exit** menu.
4. Select **Load Setup Defaults** (or press **F3**) and select "**Yes**" to confirm the selection.
5. Press **F4** to save any changes you have made and exit the BIOS to restart the computer.

Your computer is now running normally with the updated BIOS

You may now enter the BIOS and make any changes you require to the default settings.