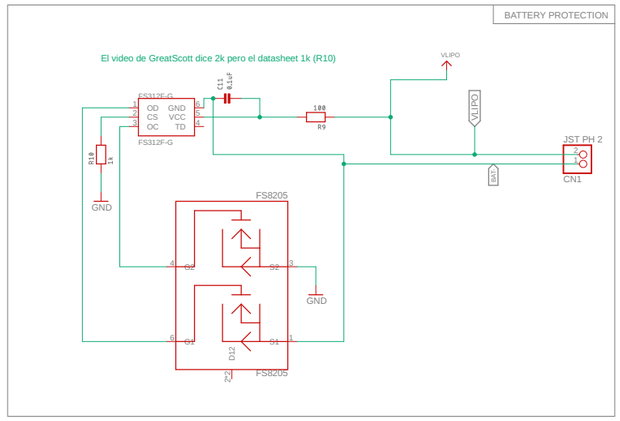

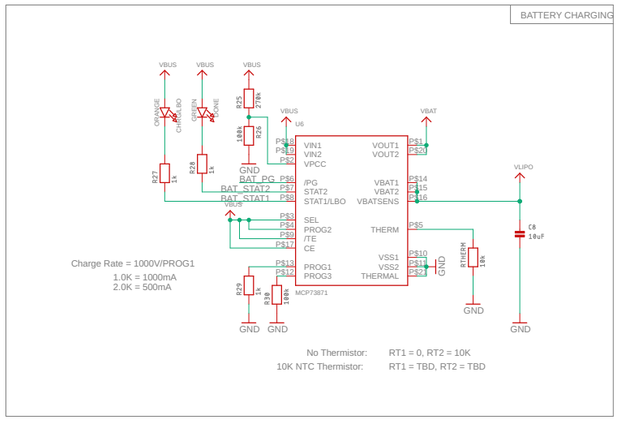

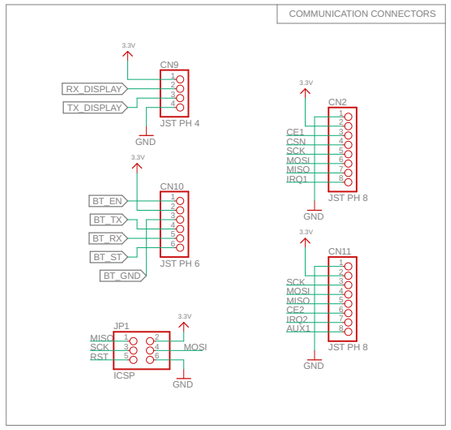

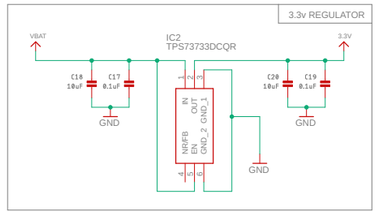

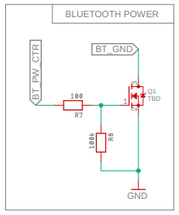

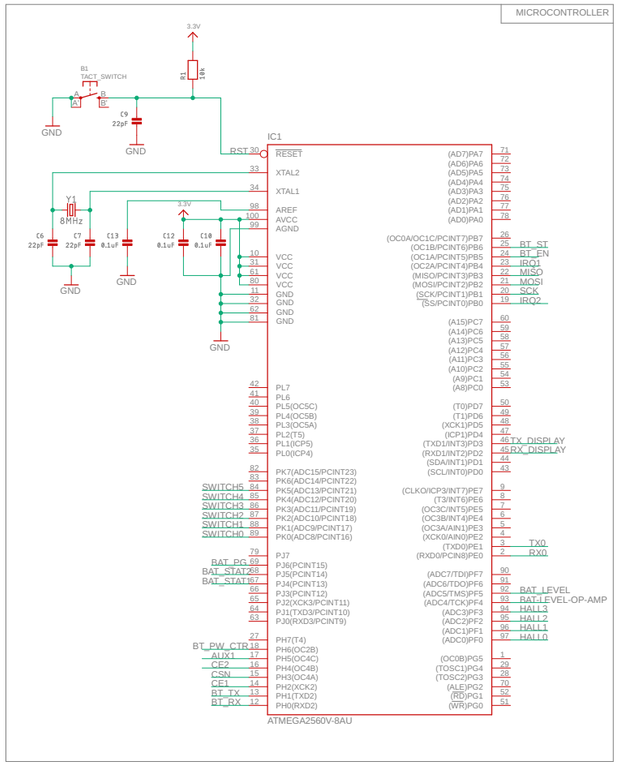

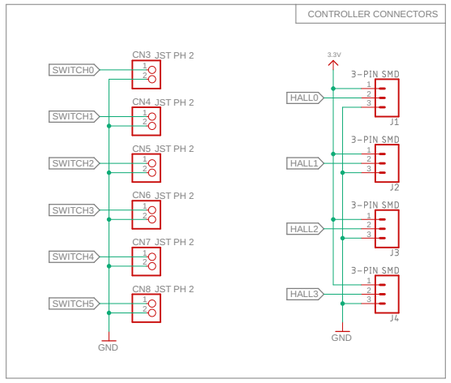

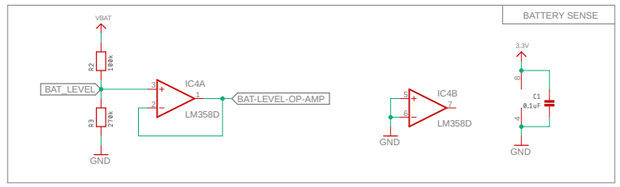

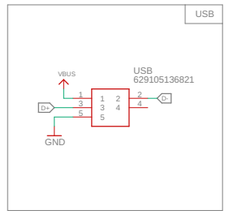

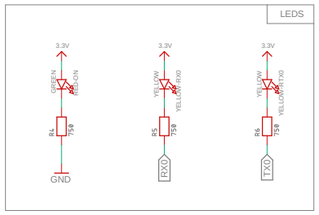

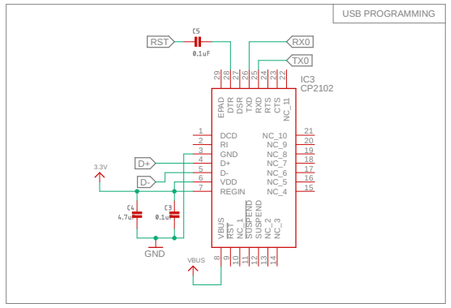

Designed by: Gustavo Villaescusa
Revised by: Alejandro López
Universitat Politècnica de València

TITLE: RC CONTROLLER

Document Number:

REV: 0.1

Date: January 2020

Sheet: 1/1