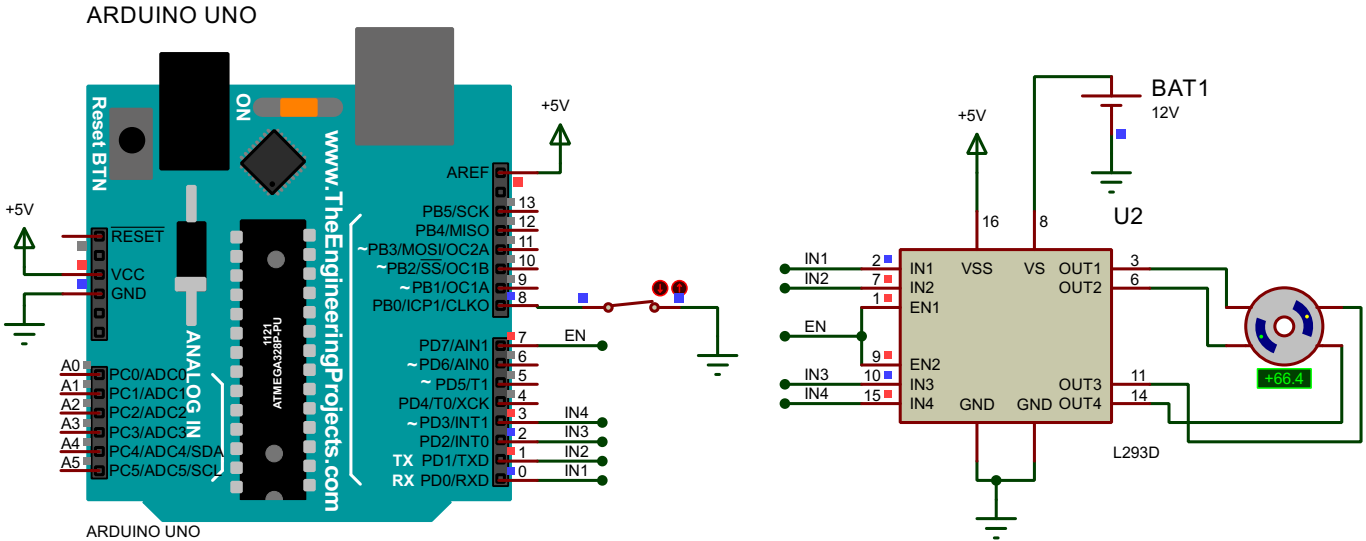
ARDUINO UNO
Reset BTN
ON
www.TheEngineeringProjects.com
+5V
AREF
PB5/SCK 13
PB4/MISO 12
~PB3/MOSI/OC2A 11
~PB2/SS/OC1B 10
~PB1/OC1A 9
PB0/ICP1/CLKO 8
RESET
VCC
GND
ANALOG IN
A0 PC0/ADC0
A1 PC1/ADC1
A2 PC2/ADC2
A3 PC3/ADC3
A4 PC4/ADC4/SDA
A5 PC5/ADC5/SCL
ATMEGA328P-PU
1121
PD7/AIN1 7 EN
~PD6/AIN0 6
~PD5/T1 5
PD4/T0/XCK 4
~PD3/INT1 3 IN4
PD2/INT0 2 IN3
TX PD1/TXD 1 IN2
RX PD0/RXD 0 IN1
ARDUINO UNO
BAT1
12V
U2
16
8
IN1 2
IN2 7
EN1 1
EN
EN2 9
IN3 10
IN4 15
VSS
VS
OUT1 3
OUT2 6
OUT3 11
OUT4 14
GND
GND
L293D
+66.4