4010_Main_Connector

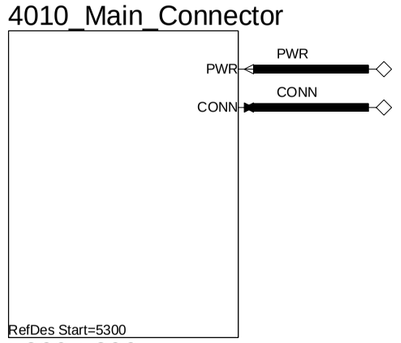

5300-5399

4010_Power

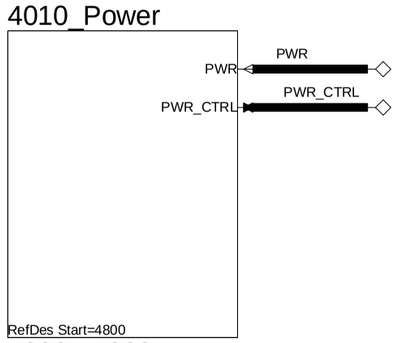

4800 - 4899

4010_PMIC1

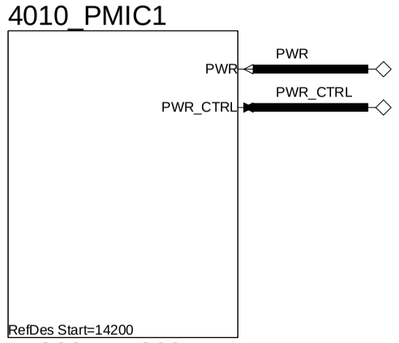

14200 - 14299

4010_Debug

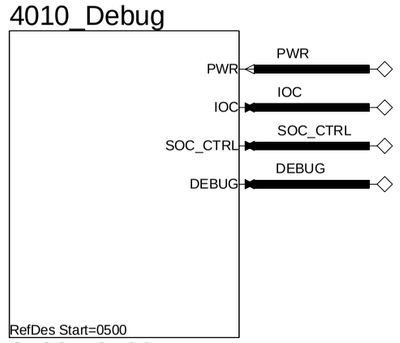

0500 - 0599

4010_FPGA

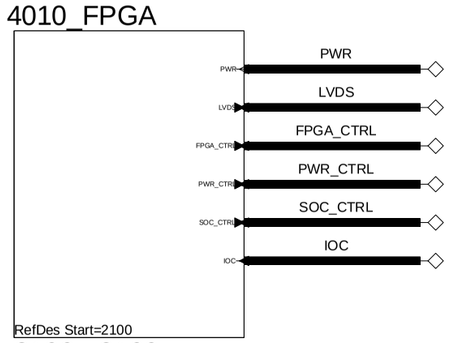

2100 - 2199

4010_IOC

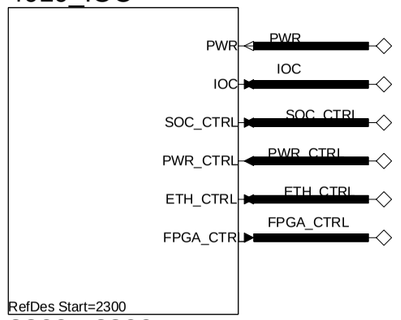

2300 - 2399

4010_SoC

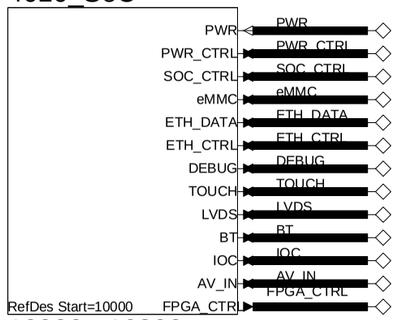

10000 - 10899

4010_eMMC

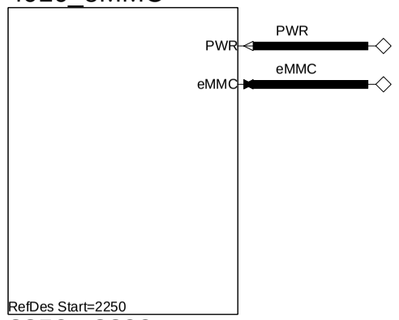

2250 - 2299

4010_Bluetooth

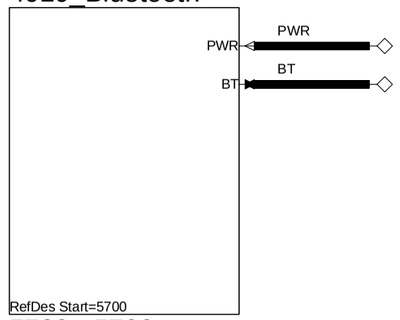

5700 - 5799

4010_ETH_PHY

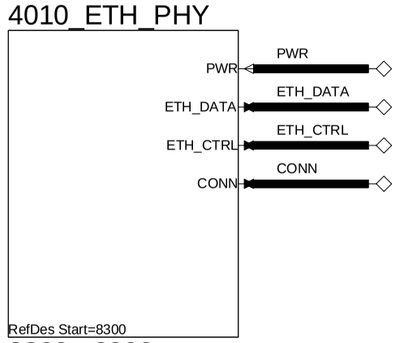

8300 - 8399

4010_CAN

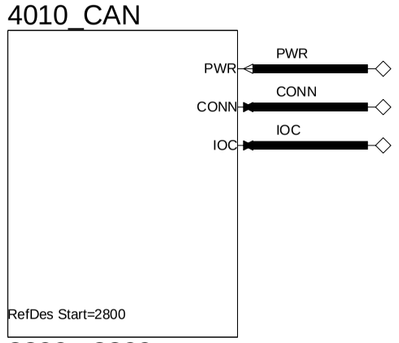

2800 - 2899

4010_TFT_Conn

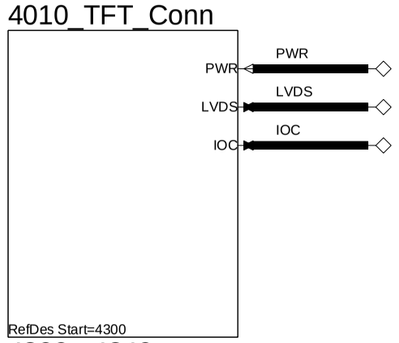

4300 - 4349

4010_TFT_BL

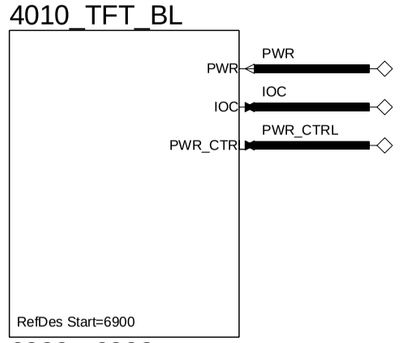

6900 - 6999

4010_CTP

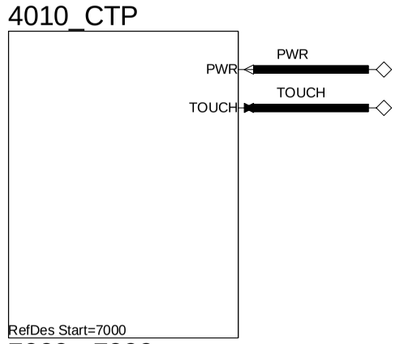

7000 - 7099

4010_VIDEO_DES

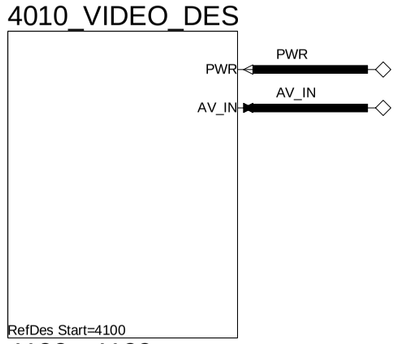

4100 - 4199

4010_TFT_BL_Conn

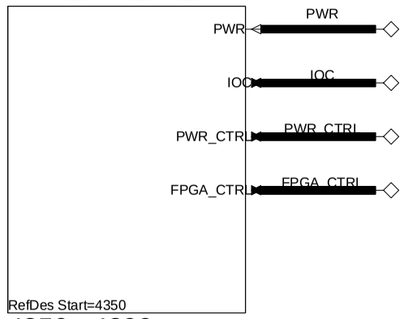

4350 - 4399

BC1

BARCODE-LABEL65X65

BC2

BARCODE-LABEL65X65

Rev.	type of change	change-no.	date of change	auth.	checked
W	ED Change of topology for the backlight power supply	CN0008078	11-29-2023	RV	CZ
A	ED Initial Release	CN0001812	07-30-2023	RV	CZ

HARMAN

Copyright reserved

Wiring modifications reserved

	date	name
created	11-29-2023	[illegible]Lez
checked	11-29-2023	CZ [illegible]ora

schematic

Root_4010

SCHEM 4010 MAIN C143

FCA FRONT PASSENGER DISPLAY MODULE

substitute for:

substitute by:

Sheet	Sheets of	Sample
1	31	DV1
Type	**Variant**	**Part Number**
C143	C143	4106088

A2 16-02-12

The reproduction, distribution and utilization of this document as well as the communication of its contents to others without explicit authorization is prohibited. Offenders will be held liable for the payment of damages. All rights reserved in the event of the grant of a patent, utility model or design.

BLUETOOTH (5700-5799)

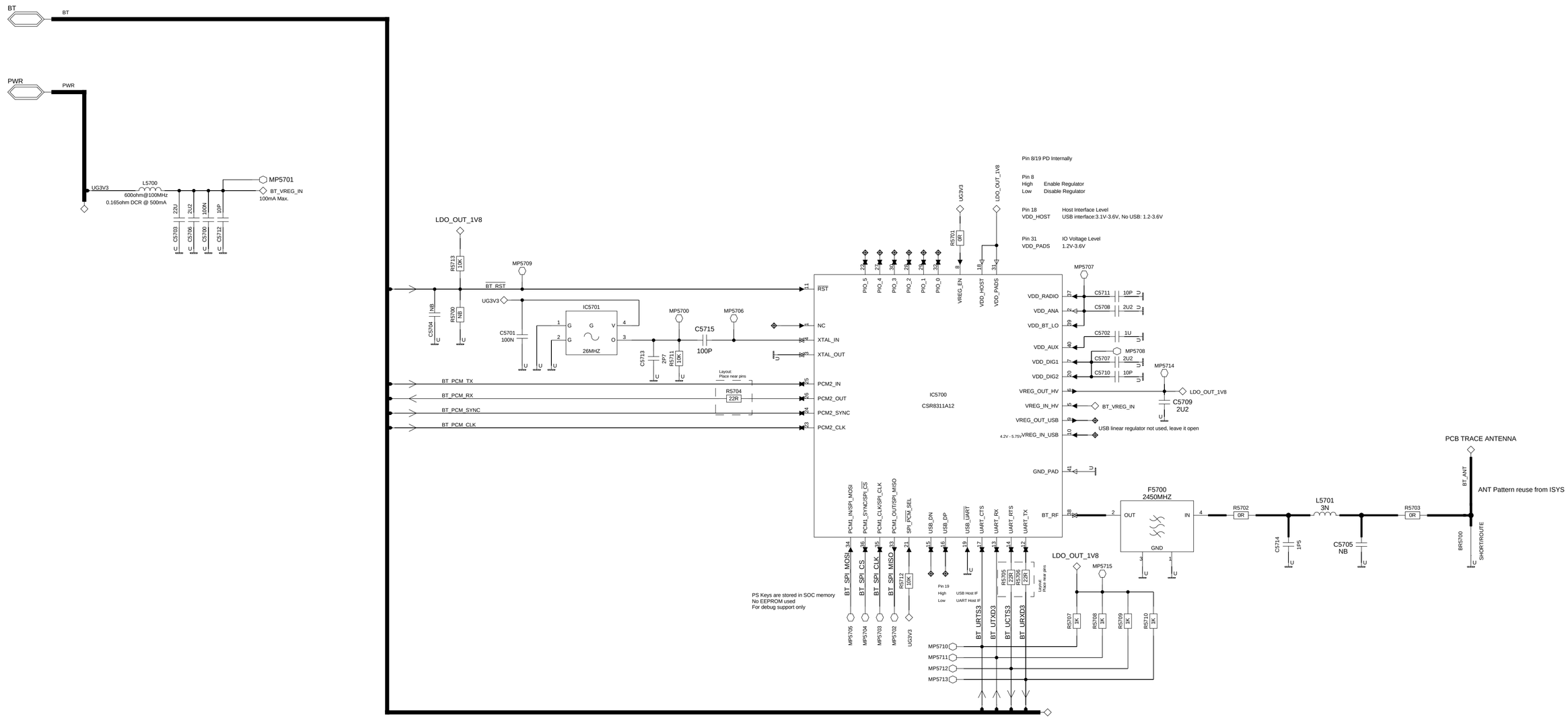

The reproduction, distribution and utilization of this document as well as the communication of its contents to others without explicit authorization is prohibited. Offenders will be held liable for the payment of damages. All rights reserved in the event of the grant of a patent, utility model or design.

Rev.	type of change	change-no.	date of change	auth.	checked

HARMAN

Copyright reserved

Wiring modifications reserved

	date	name
created		
checked		

schematic

4010_Bluetooth

substitute for:

substitute by:

Sheet	Sheets of	Sample
2	31	
Type	Variant	Part Number
	C143	

False

CAN (2800-2899)

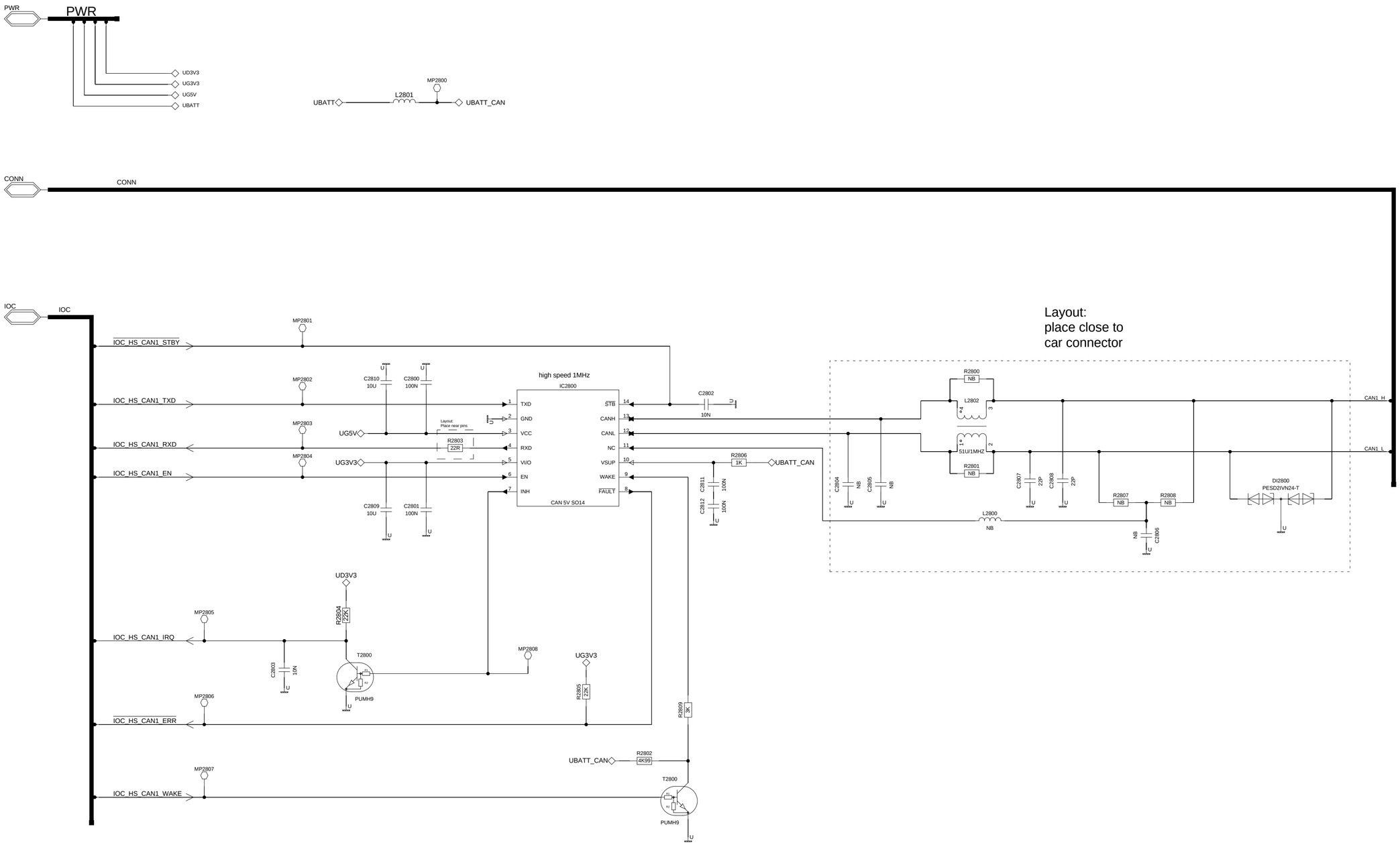

The reproduction, distribution and utilization of this document as well as the communication of its contents to others without explicit authorization is prohibited. Offenders will be held liable for the payment of damages. All rights reserved in the event of the grant of a patent, utility model or design.

Rev.	type of change	change-no.	date of change	auth.	checked

HARMAN

Copyright reserved

Wiring modifications reserved

	date	name
created		
checked		

schematic

4010_CAN

Sheet	Sheets of	Sample
3	31	
Type	Variant	Part Number

substitute for:

substitute by:

A2 16.02.12

False

CTP (7000-7099)

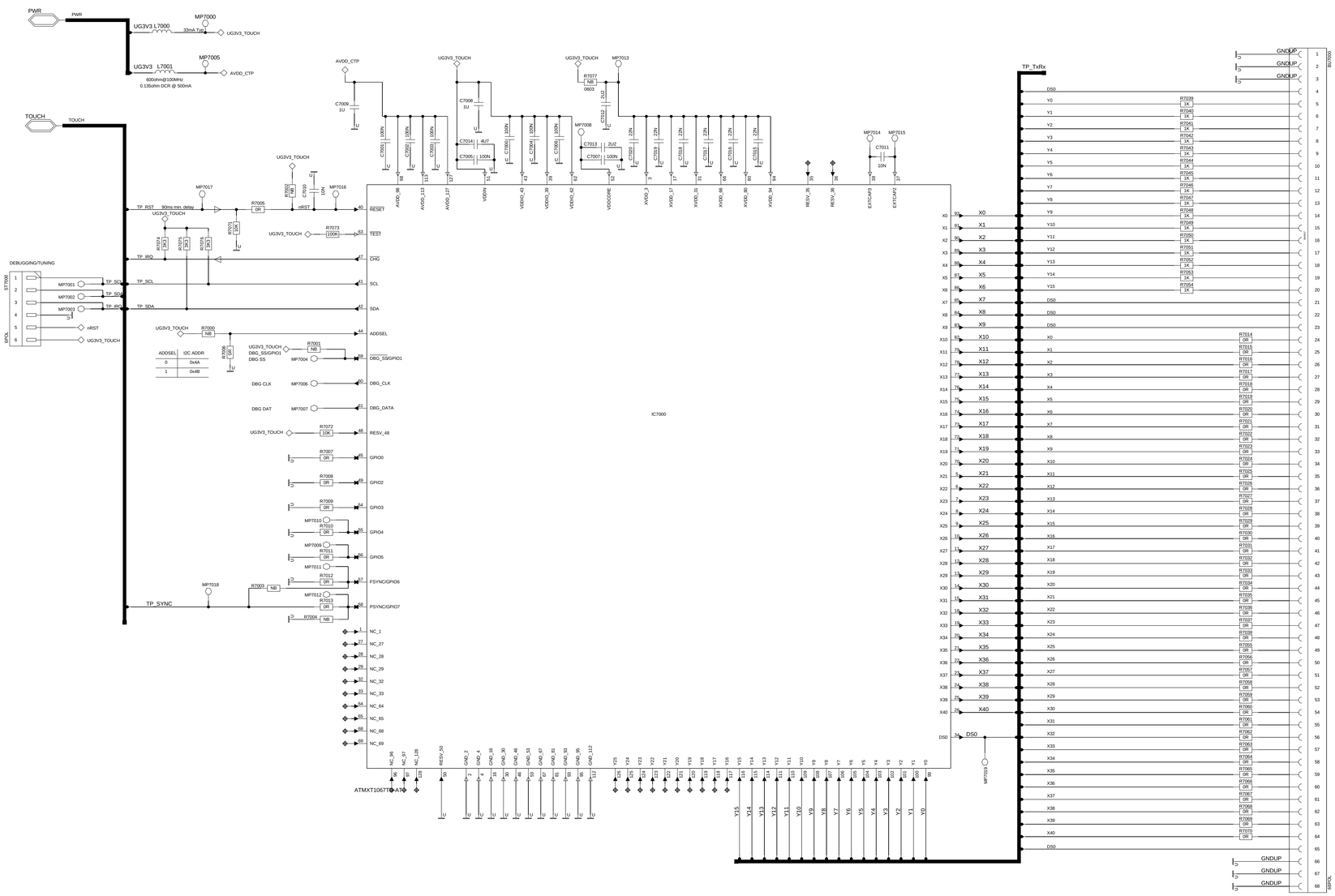

The reproduction, distribution and utilization of this document as well as the communication of its contents to others without explicit authorization is prohibited. Offenders will be held liable for the payment of damages. All rights reserved in the event of the grant of a patent, utility model or design.

Rev.	type of change	change-no.	date of change	auth.	checked

HARMAN

Copyright reserved

Wiring modifications reserved

	date	name
created		
checked		

schematic

4010_CTP

Sheet	Sheets of	Sample
4	31	

Type	Variant	Part Number
	C143	

substitute for:

substitute by:

21.10.09.12

False

DEBUG (0500-0599)

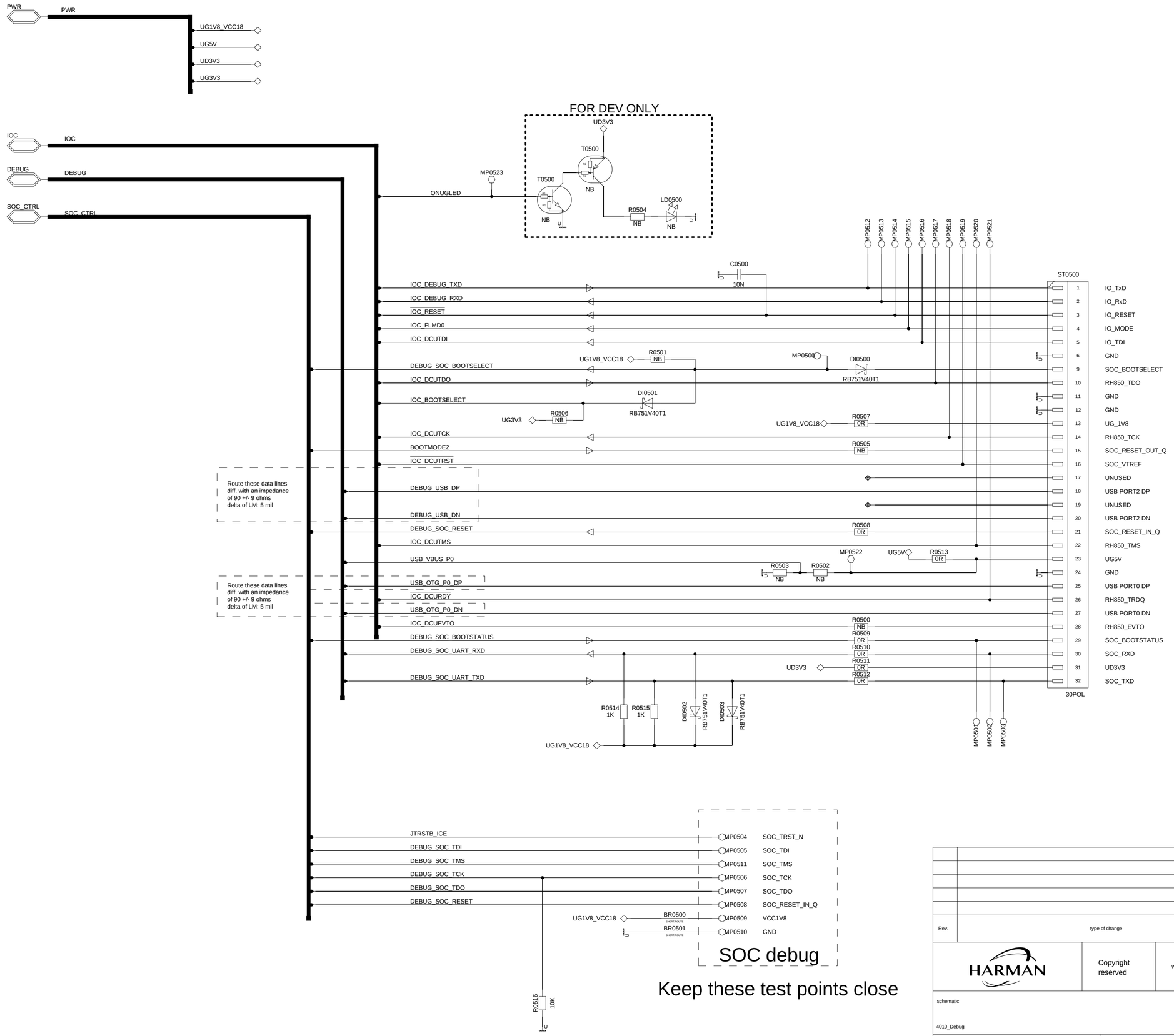

The reproduction, distribution and utilization of this document as well as the communication of its contents to others without explicit authorization is prohibited. Offenders will be held liable for the payment of damages. All rights reserved in the event of the grant of a patent, utility model or design.

Rev.	type of change	change-no.	date of change	auth.	checked

HARMAN

Copyright reserved

Wiring modifications reserved

	date	name
created		
checked		

schematic

4010_Debug

Sheet	Sheets of	Sample
5	31	

Type	Variant	Part Number

substitute for:

substitute by:

A2 16.02.12

False

ETH-PHY (2250-2299)

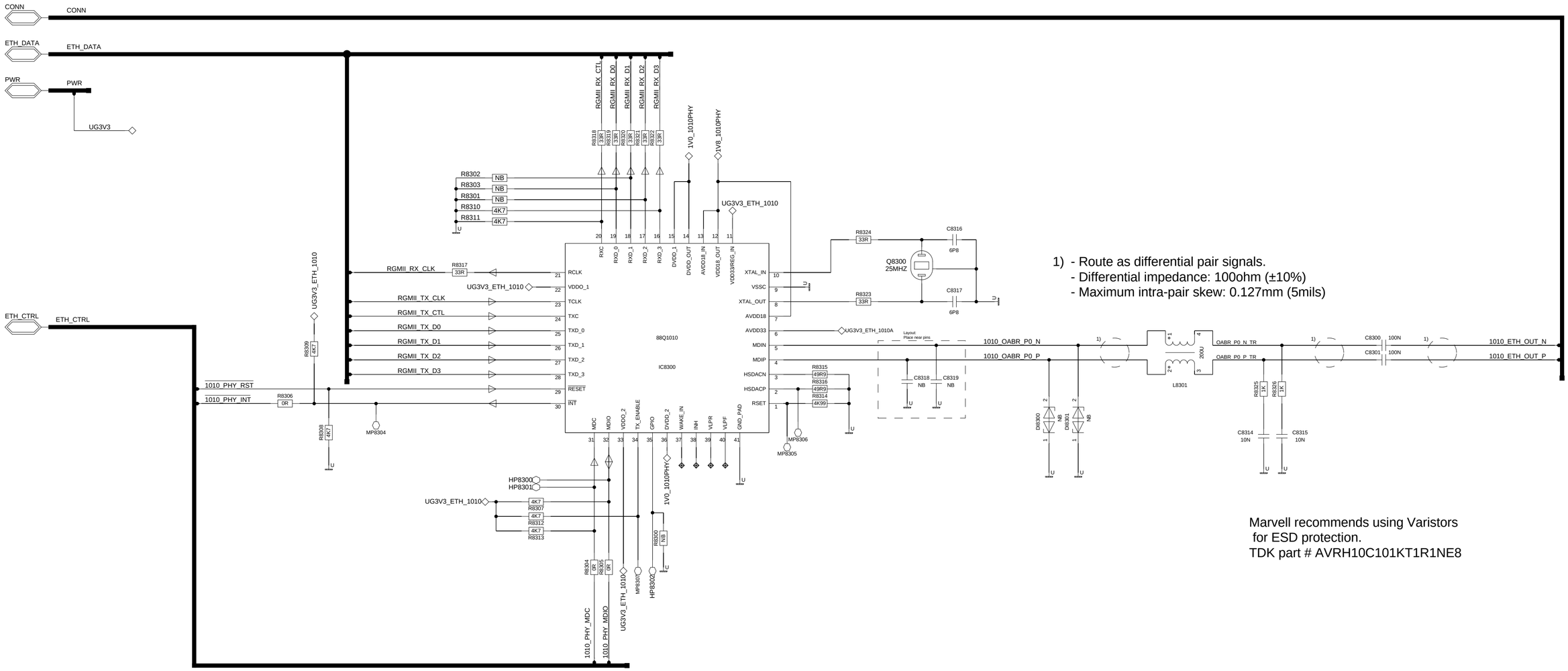

1) - Route as differential pair signals.
- Differential impedance: 100ohm (±10%)
- Maximum intra-pair skew: 0.127mm (5mils)

Marvell recommends using Varistors
for ESD protection.
TDK part # AVRH10C101KT1R1NE8

Layout:
Place 1uF caps near each Power Pin

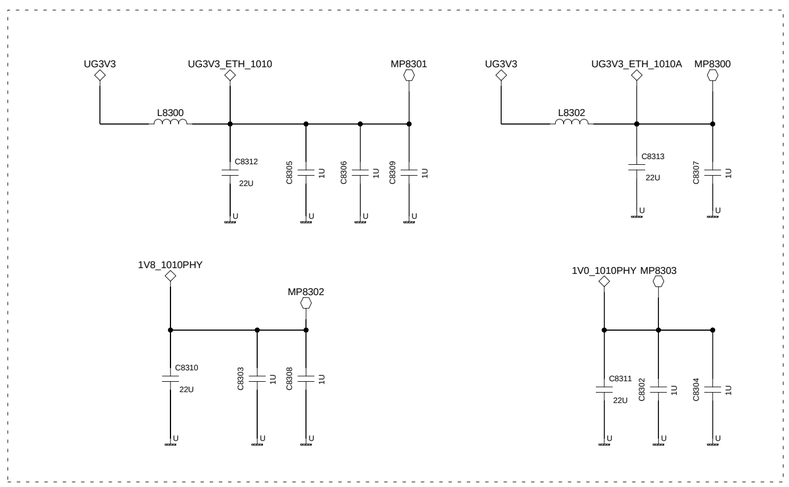

Rev.	type of change	change-no.	date of change	auth.	checked

HARMAN

Copyright reserved

Wiring modifications reserved

	date	name
created		
checked		

schematic

4010_ETH_PHY

Sheet	Sheets of	Sample
6	31	
Type	Variant	Part Number

substitute for:

substitute by:

A2 16.02.12

The reproduction, distribution and utilization of this document as well as the communication of its contents to others without explicit authorization is prohibited. Offenders will be held liable for the payment of damages. All rights reserved in the event of the grant of a patent, utility model or design.

False

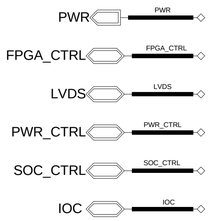

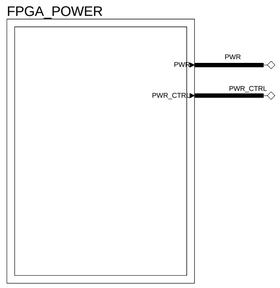

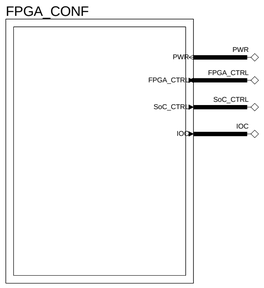

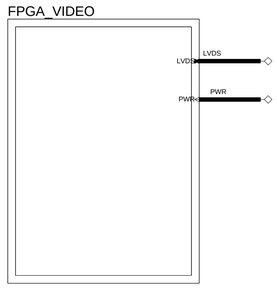

The reproduction, distribution and utilization of this document as well as the communication of its contents to others without explicit authorization is prohibited. Offenders will be held liable for the payment of damages. All rights reserved in the event of the grant of a patent, utility model or design.

Rev.	type of change	change-no.	date of change	auth.	checked

HARMAN

Copyright reserved

Wiring modifications reserved

	date	name
created		
checked		

schematic

4010_FPGA

Sheet	Sheets of	Sample
7	31	

Type	Variant	Part Number
	C143	

substitute for:

substitute by:

A4 210x297

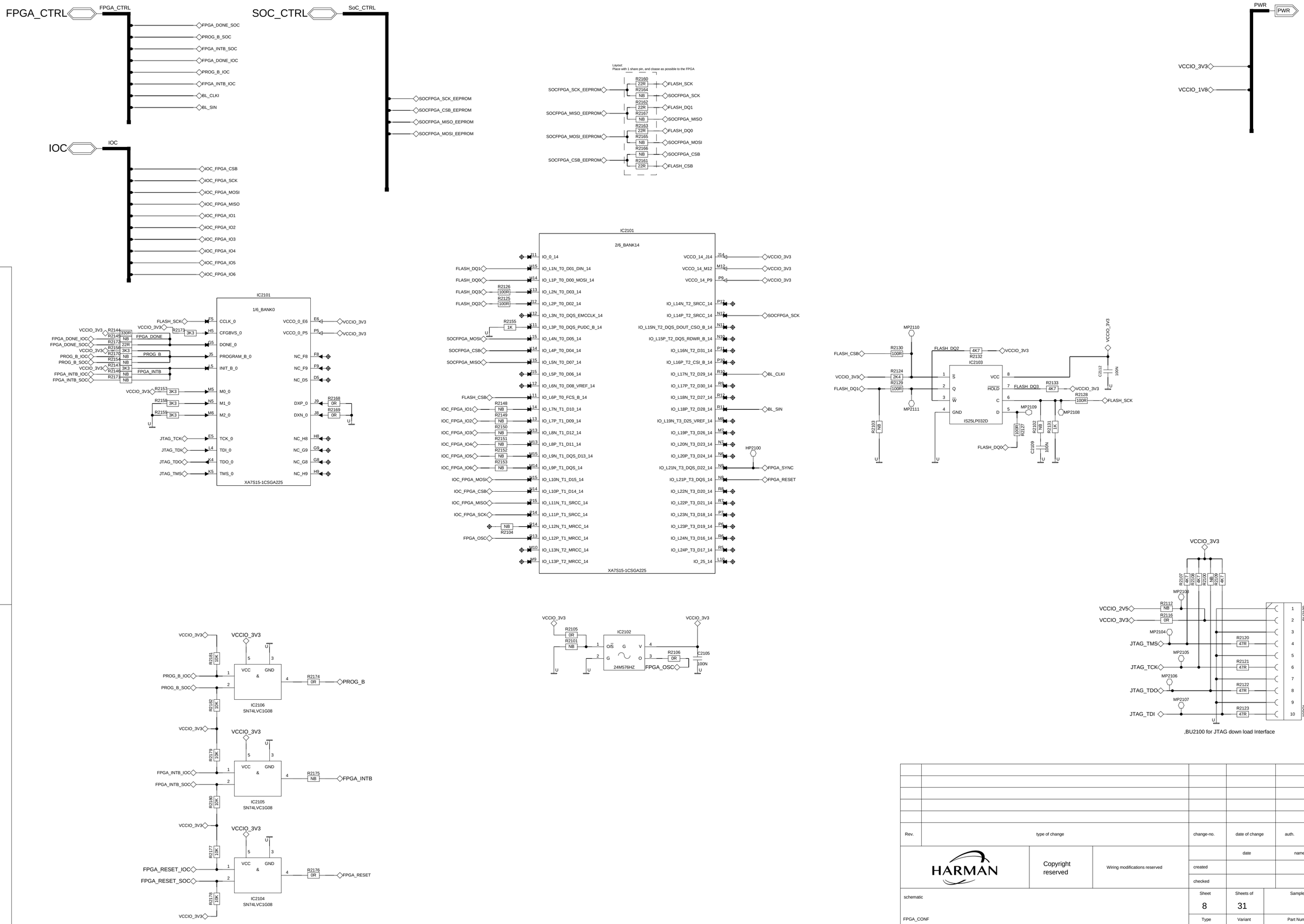

Rev.	type of change	change-no.	date of change	auth.	checked

HARMAN

Copyright reserved

Wiring modifications reserved

	date	name
created		
checked		

schematic

FPGA_CONF

Sheet	Sheets of	Sample
8	31	
Type	Variant	Part Number
	C143	

substitute for:

substitute by:

A2 16.02.12

The reproduction, distribution and utilization of this document as well as the communication of its contents to others without explicit authorization is prohibited. Offenders will be held liable for the payment of damages. All rights reserved in the event of the grant of a patent, utility model or design.

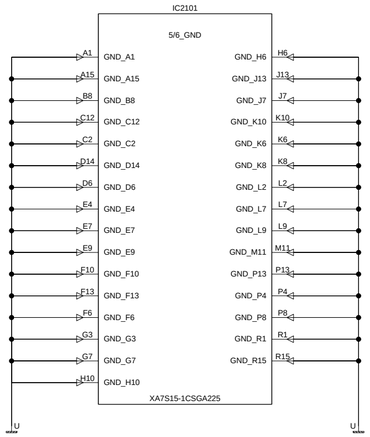

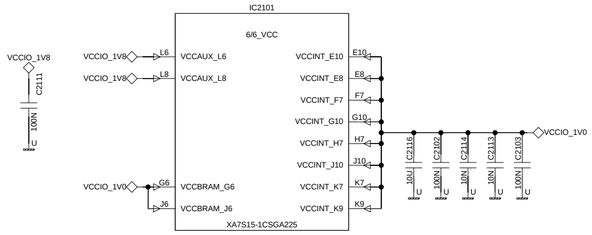

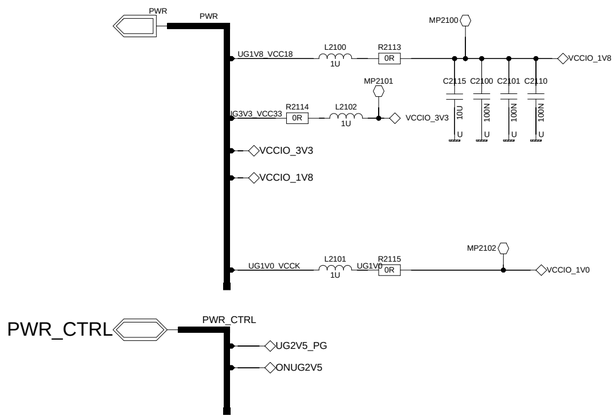

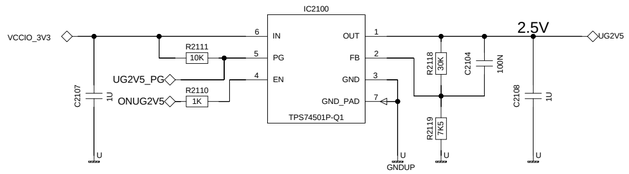

The reproduction, distribution and utilization of this document as well as the communication of its contents to others without explicit authorization is prohibited. Offenders will be held liable for the payment of damages. All rights reserved in the event of the grant of a patent, utility model or design.

Rev.	type of change	change-no.	date of change	auth.	checked

HARMAN

Copyright reserved

Wiring modifications reserved

	date	name
created		
checked		

schematic

FPGA_POWER

substitute for:

substitute by:

Sheet	Sheets of	Sample
9	31	
Type	Variant	Part Number
	C143	

A2 16:02:12

The reproduction, distribution and utilization of this document as well as the communication of its contents to others without explicit authorization is prohibited. Offenders will be held liable for the payment of damages. All rights reserved in the event of the grant of a patent, utility model or design.

Rev.	type of change	change-no.	date of change	auth.	checked

HARMAN

Copyright reserved

Wiring modifications reserved

	date	name
created		
checked		

schematic

FPGA_VIDEO

Sheet	Sheets of	Sample
10	31	

Type	Variant	Part Number
	C143	

substitute for:

substitute by:

A2 16:02:12

IOC (2300-2399)

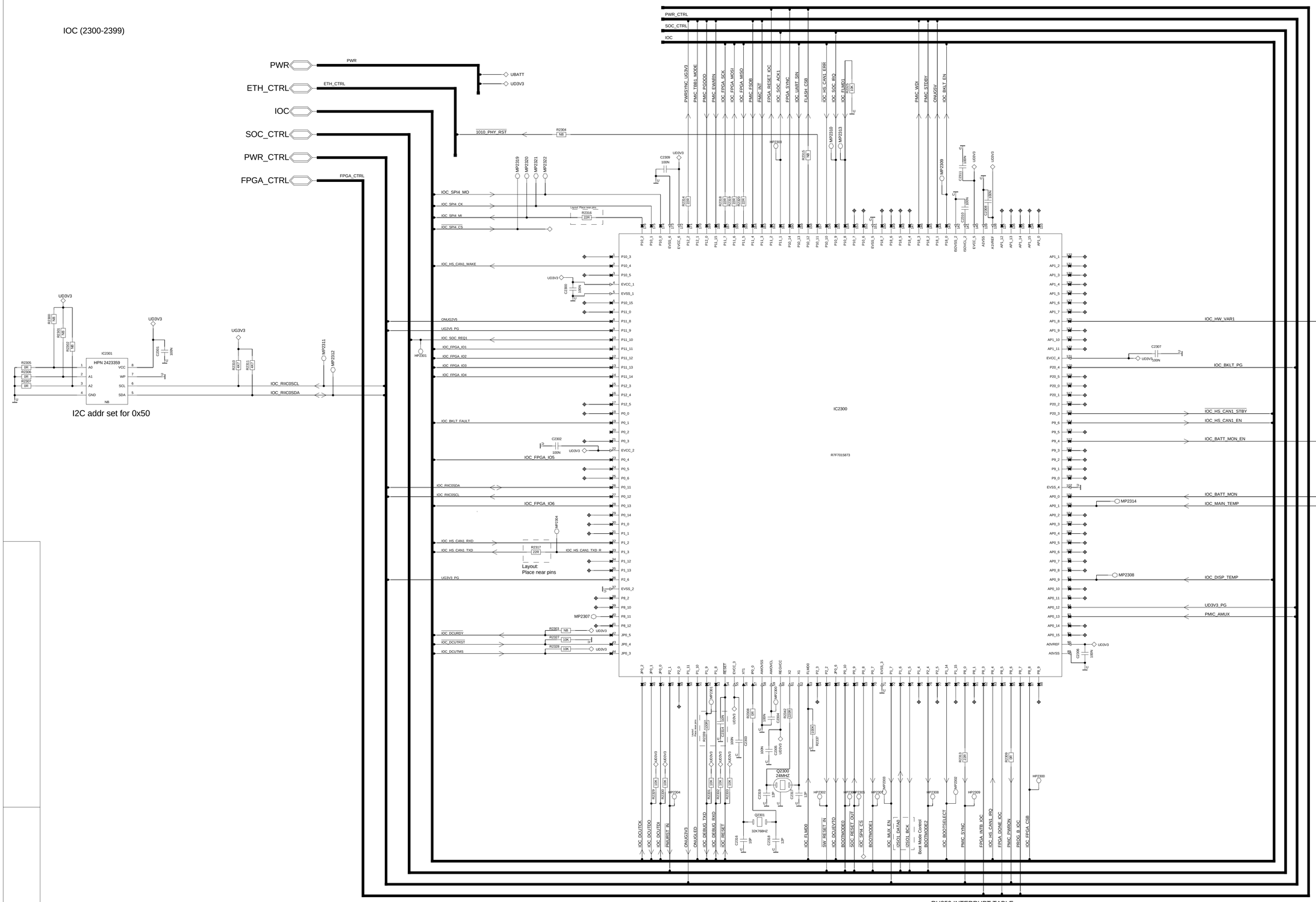

PWM/SYNC SIGNALS

PIN NO.	FUNCTION	SIGNAL	TIMER	FREQUENCY
113	PWM	IOC_BKLT_PWM	TAUJ1O1	200 - 300 Hz
18	PS SYNC	IOC_BKLT_SYNC	HW Defined	2 MHz
171	PS SYNC	PWRSYNC_UG3V3	HW Defined	250 - 500KHz
80	PS SYNC	PMIC_SYNC	HW Defined	2.5 MHz

RH850 I2C BUS COMPONENTS	
DEVICE	7-BIT ADDRESS
IOC EEPROM (IC2301)	0x50
PMIC1 PF8100 (IC14200)	0x08

RH850 INTERRUPT TABLE

INTP0	AWO	IOC_BKLT_FAULT
INTP1	ISO	----------
INTP2	ISO	----------
INTP3	ISO	HS_CAN1_RXD
INTP4	ISO	----------
INTP5	AWO	----------
INTP6	AWO	----------
INTP7	AWO	----------
INTP8	AWO	HS_CAN1_IRQ
INTP9	AWO	----------
INTP10	ISO	IOC_SOC_IPC_IRQ
INTP11	AWO	----------
INTP12	AWO	----------
INTP13	AWO	----------
INTP14	AWO	DEBUG_RX
INTP15	AWO	----------

Rev.	type of change	change-no.	date of change	auth.	checked

HARMAN

Copyright reserved

Wiring modifications reserved

	date	name
created		
checked		

schematic: 4010_IOC

Sheet	Sheets of	Sample
11	31	

Type	Variant	Part Number
	C143	

substitute for: | substitute by:

The reproduction, distribution and utilization of this document as well as the communication of its contents to others without explicit authorization is prohibited. Offenders will be held liable for the payment of damages. All rights reserved in the event of the grant of a patent, utility model or design.

MAIN CONNECTOR (5300-5399)

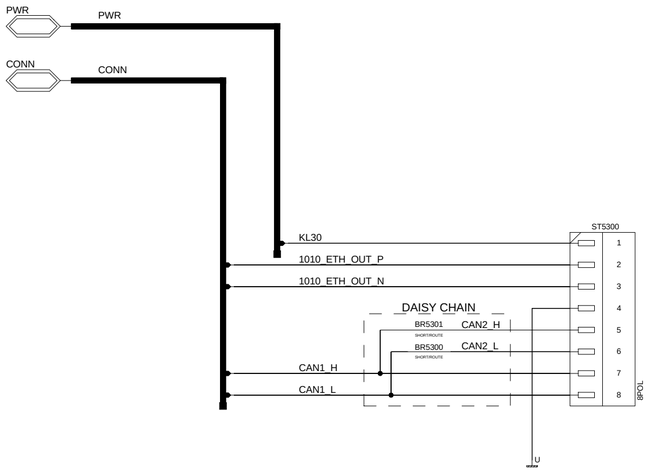

The reproduction, distribution and utilization of this document as well as the communication of its contents to others without explicit authorization is prohibited. Offenders will be held liable for the payment of damages. All rights reserved in the event of the grant of a patent, utility model or design.

Rev.	type of change	change-no.	date of change	auth.	checked

HARMAN

Copyright reserved

Wiring modifications reserved

	date	name
created		
checked		

schematic

4010_Main_Connector

Sheet	Sheets of	Sample
12	31	
Type	Variant	Part Number

substitute for:

substitute by:

A2 16:02:12

False

PMIC1 (14200-14299)

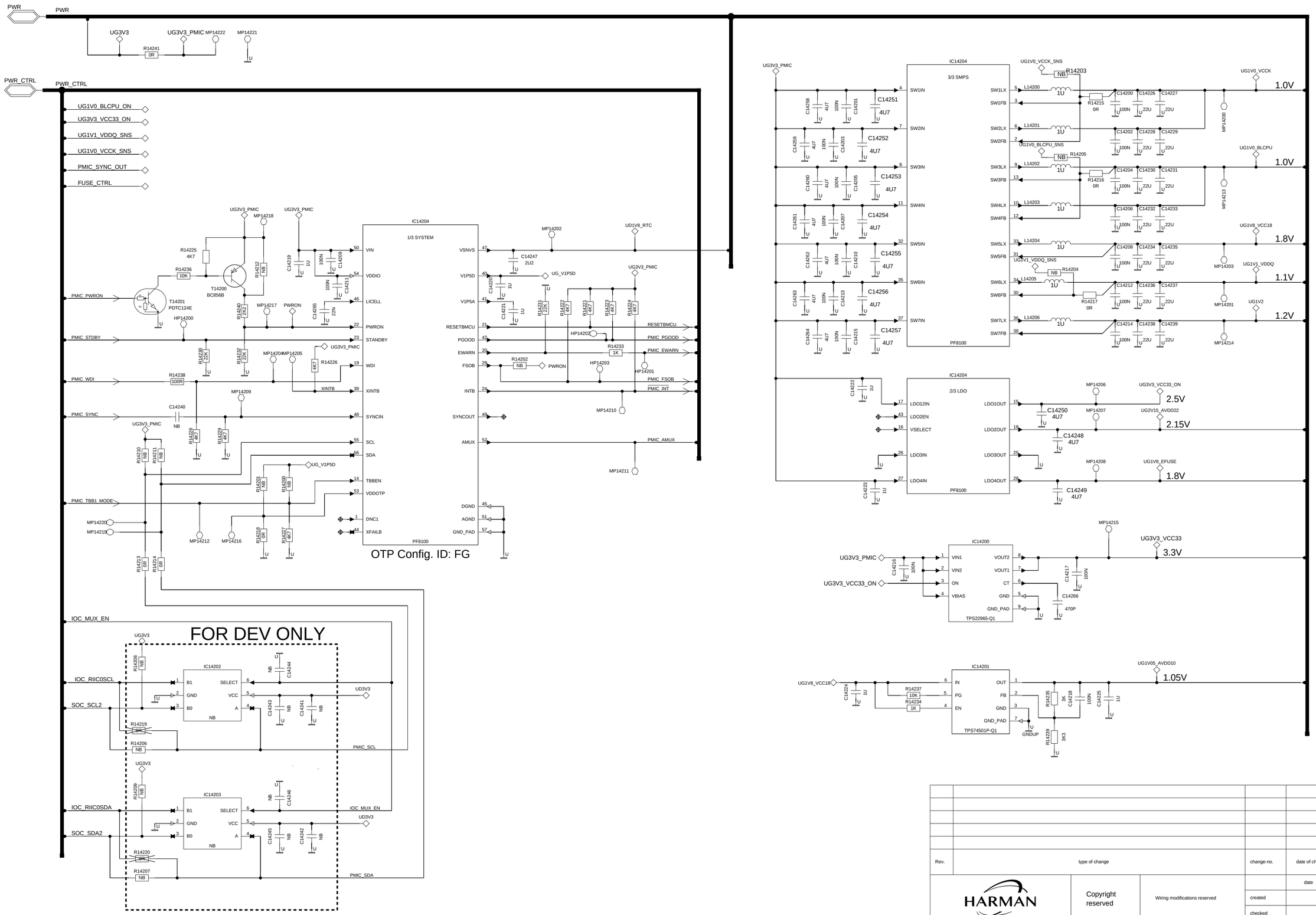

Components for DEV only:
C501, C503, C504, C506 are 100N and HPN: 3504271
C502 and C505 are 1N and HPN: 3661725
R14224 and R14225 are 2K2 and HPN: 4026294
IC501 and IC502 are NLVASB3157DFT2G and HPN: 2580896
All components are replace in the Variant.

Rev.	type of change	change-no.	date of change	auth.	checked

HARMAN

Copyright reserved

Wiring modifications reserved

	date	name
created		
checked		

schematic

4010_PMIC1

Sheet	Sheets of	Sample
13	31	
Type	Variant	Part Number

substitute for:

substitute by:

A2 16.02.12

The reproduction, distribution and utilization of this document as well as the communication of its contents to others without explicit authorization is prohibited. Offenders will be held liable for the payment of damages. All rights reserved in the event of the grant of a patent, utility model or design.

False

POWER (4800-4999)

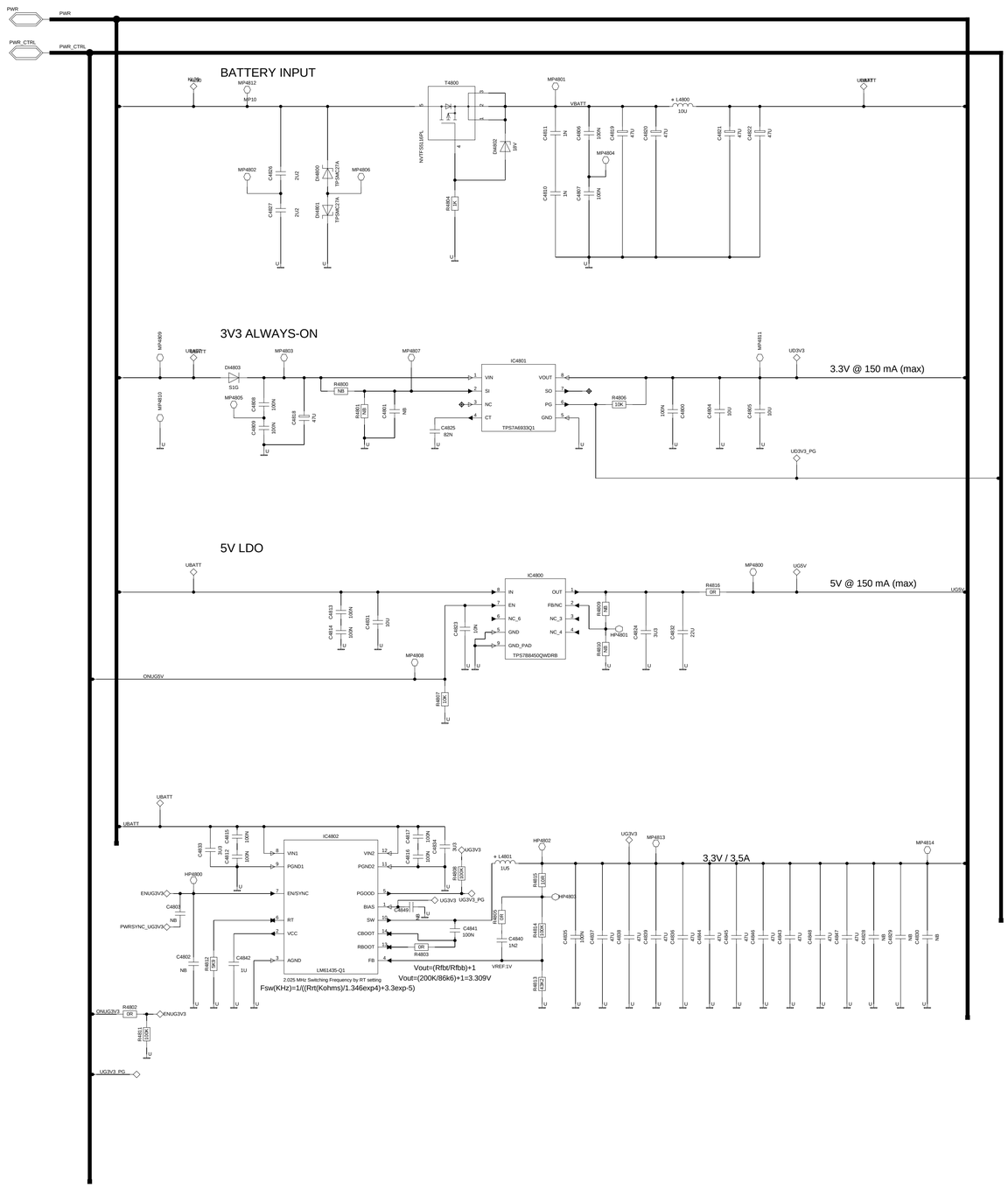

The reproduction, distribution and utilization of this document as well as the communication of its contents to others without explicit authorization is prohibited. Offenders will be held liable for the payment of damages. All rights reserved in the event of the grant of a patent, utility model or design.

Rev.	type of change	change-no.	date of change	auth.	checked

HARMAN

Copyright reserved

Wiring modifications reserved

	date	name
created		
checked		

schematic

4010_Power

Sheet	Sheets of	Sample
14	31	

Type	Variant	Part Number

substitute for:

substitute by:

False

SOC (10000-10999)

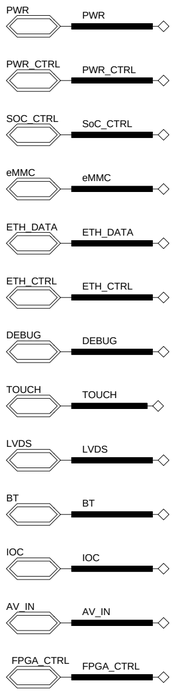

4010_SoC_Power

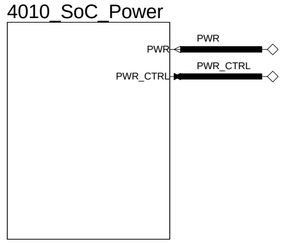

10500 - 10599

4010_SoC_CTRL

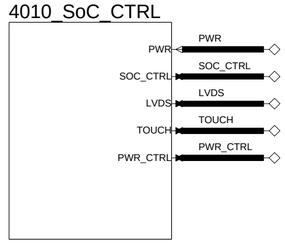

10600 - 10699

4010_SoC_Video

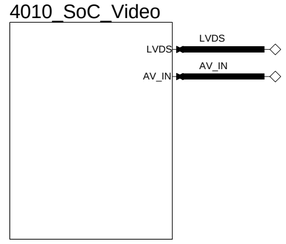

10700 - 10799

4010_SoC_LPDDR4

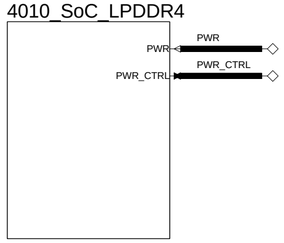

10400 - 10499

4010_SoC_ETH_PCIe_USB

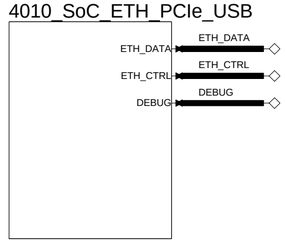

10300 - 10399

4010_SoC_Audio

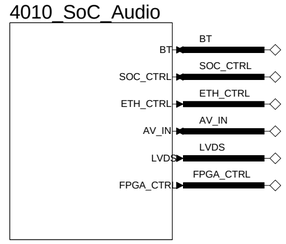

10800 - 10899

4010_SoC_eMMC_NAND_SD

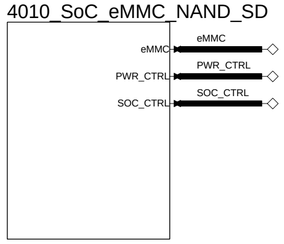

10100 - 10199

4010_SoC_Serial_IF

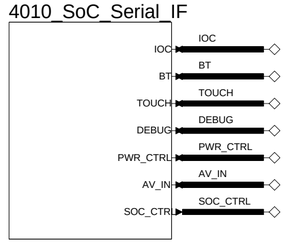

10200 - 10299

The reproduction, distribution and utilization of this document as well as the communication of its contents to others without explicit authorization is prohibited. Offenders will be held liable for the payment of damages. All rights reserved in the event of the grant of a patent, utility model or design.

Rev.	type of change	change-no.	date of change	auth.	checked

HARMAN

Copyright reserved

Wiring modifications reserved

	date	name
created		
checked		

schematic

4010_SoC

Sheet	Sheets of	Sample
15	31	
Type	Variant	Part Number

substitute for:

substitute by:

A2 16:02:12

False

SOC_AUDIO (10800-10899)

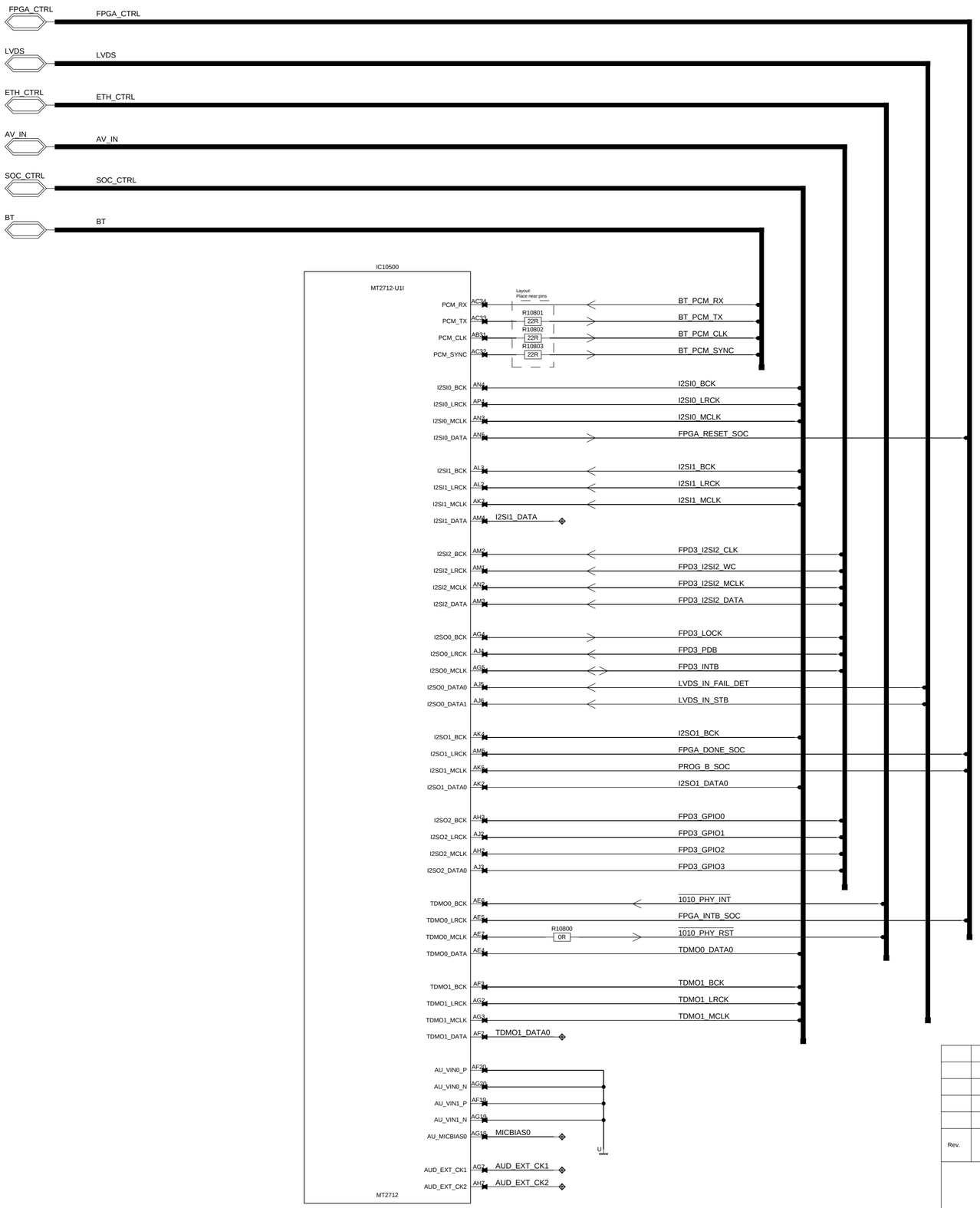

Rev.	type of change	change-no.	date of change	auth.	checked

HARMAN

Copyright reserved

Wiring modifications reserved

	date	name
created		
checked		

schematic

4010_SoC_Audio

Sheet	Sheets of	Sample
16	31	
Type	Variant	Part Number

substitute for:

substitute by:

A2 16:02:12

The reproduction, distribution and utilization of this document as well as the communication of its contents to others without explicit authorization is prohibited. Offenders will be held liable for the payment of damages. All rights reserved in the event of the grant of a patent, utility model or design.

SOC_CTRL (10600-10699)

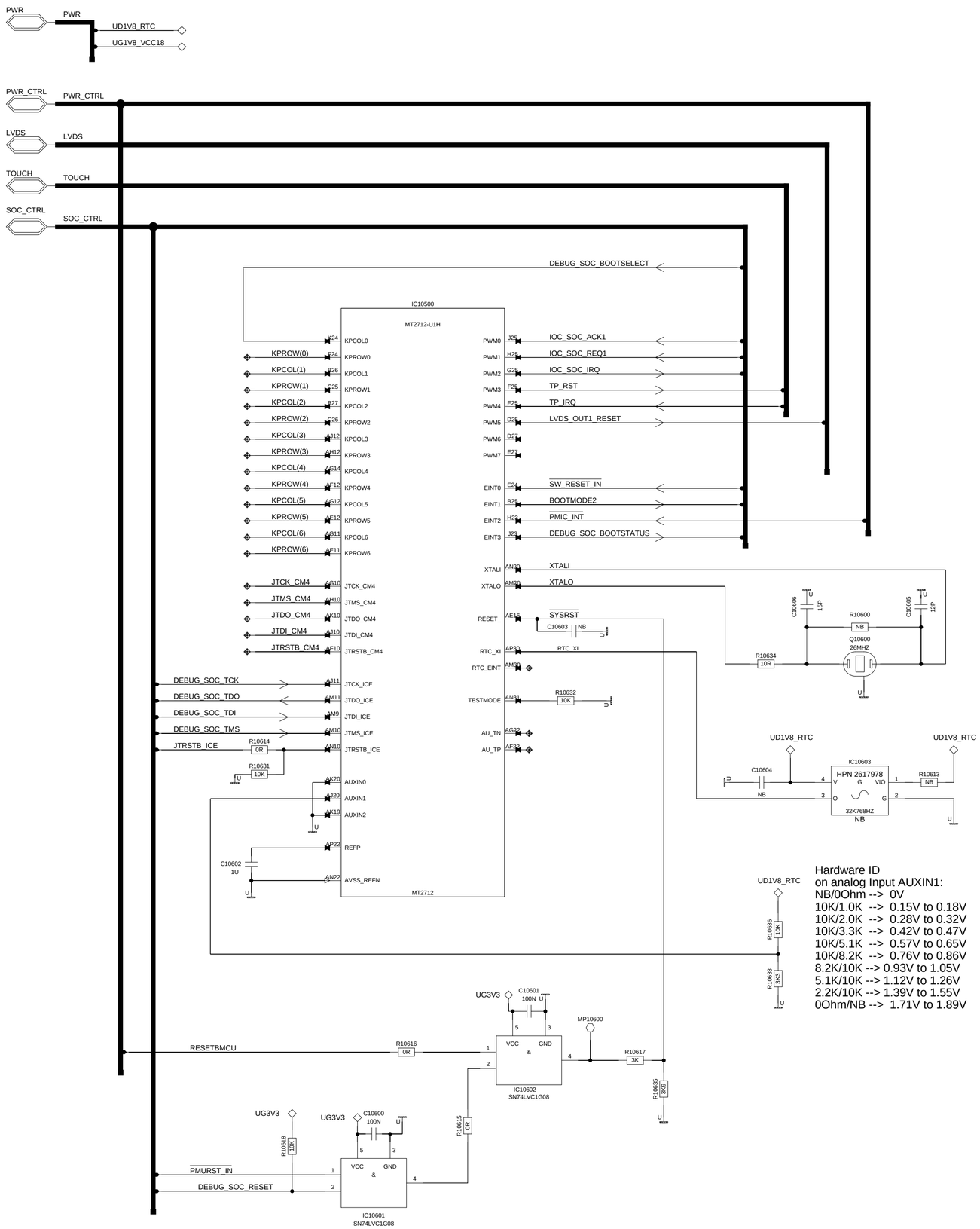

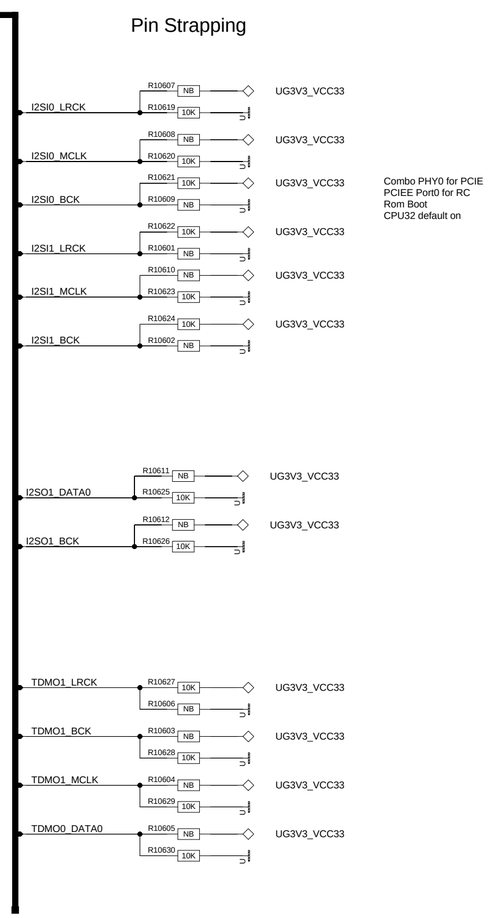

Mode	I2SI0_LRCK	I2SI0_MCLK	I2SI0_BCK	I2SI1_BCK (multi-used)	I2SI1_LRLK	I2SI1_MCLK (multi-used)
Combo PHY0 for USB	X	X	X	X	X	**1**
Combo PHY0 for PCIE	X	X	X	X	X	**0**
Combo PHY1 for USB	X	X	X	X	**1**	X
Combo PHY1 for PCIE	X	X	X	X	**0**	X
PCIEE Port0 for RC	X	X	X	**1**	X	X
PCIEE Port0 for EP	X	X	X	**0**	X	X
PCIEE Port1 for RC	X	X	**1**	X	X	X
PCIEE Port1 for EP	X	X	**0**	X	X	X
Rom Boot	X	**0**	X	X	X	X
Nor-flash bypass rom boot	X	**1**	X	X	X	X
CPU32 default on	**0**	X	X	X	X	X
CPU64 default on	**1**	**1**	X	X	X	X

IPC1POR/Boot Mode

I2SO1_DATA0 status[1]	L	L	H	H
I2SO1_BCK status[0]	L	H	L	H
1	EMMC	NAND	NOR	SD
2	SD	EMMC	NAND	NOR
3	NOR	SD	EMMC	NAND
4	NAND	NOR	SD	EMMC

Trapping Mode	TDMO1_LRCK	TDMO1_BCK	TDMO1_MCLK	TDMO0_DATA0
Slowest Boot device speed configuration	1	X	X	X
Fastest Boot device speed configuration	0	X	X	X
NAND randomizer: disabable	X	0	X	X
NAND randomizer: enable	X	1	X	X
NOR flash address mode: 3-byte	X	X	0	X
NOR flash address mode: 4-byte	X	X	1	X
Alternative boot loader: disable	X	X	X	0
Alternative boot loader: enable	X	X	X	1

Hardware ID
on analog Input AUXIN1:

NB/0Ohm --> 0V	ED1 HW
10K/1.0K --> 0.15V to 0.18V	ED2 HW
10K/2.0K --> 0.28V to 0.32V	ED3 HW
10K/3.3K --> 0.42V to 0.47V	DV HW
10K/5.1K --> 0.57V to 0.65V	PV HW
10K/8.2K --> 0.76V to 0.86V	PV2 HW
8.2K/10K --> 0.93V to 1.05V	PV3 HW
5.1K/10K --> 1.12V to 1.26V	
2.2K/10K --> 1.39V to 1.55V	
0Ohm/NB --> 1.71V to 1.89V	

Rev.	type of change	change-no.	date of change	auth.	checked

HARMAN

Copyright reserved

Wiring modifications reserved

	date	name
created		
checked		

schematic

4010_SoC_CTRL

substitute for:

substitute by:

Sheet	Sheets of	Sample
17	31	
Type	Variant	Part Number

A2 16.02.12

The reproduction, distribution and utilization of this document as well as the communication of its contents to others without explicit authorization is prohibited. Offenders will be held liable for the payment of damages. All rights reserved in the event of the grant of a patent, utility model or design.

SOC_ETH_PCIe_USB (10300-10399)

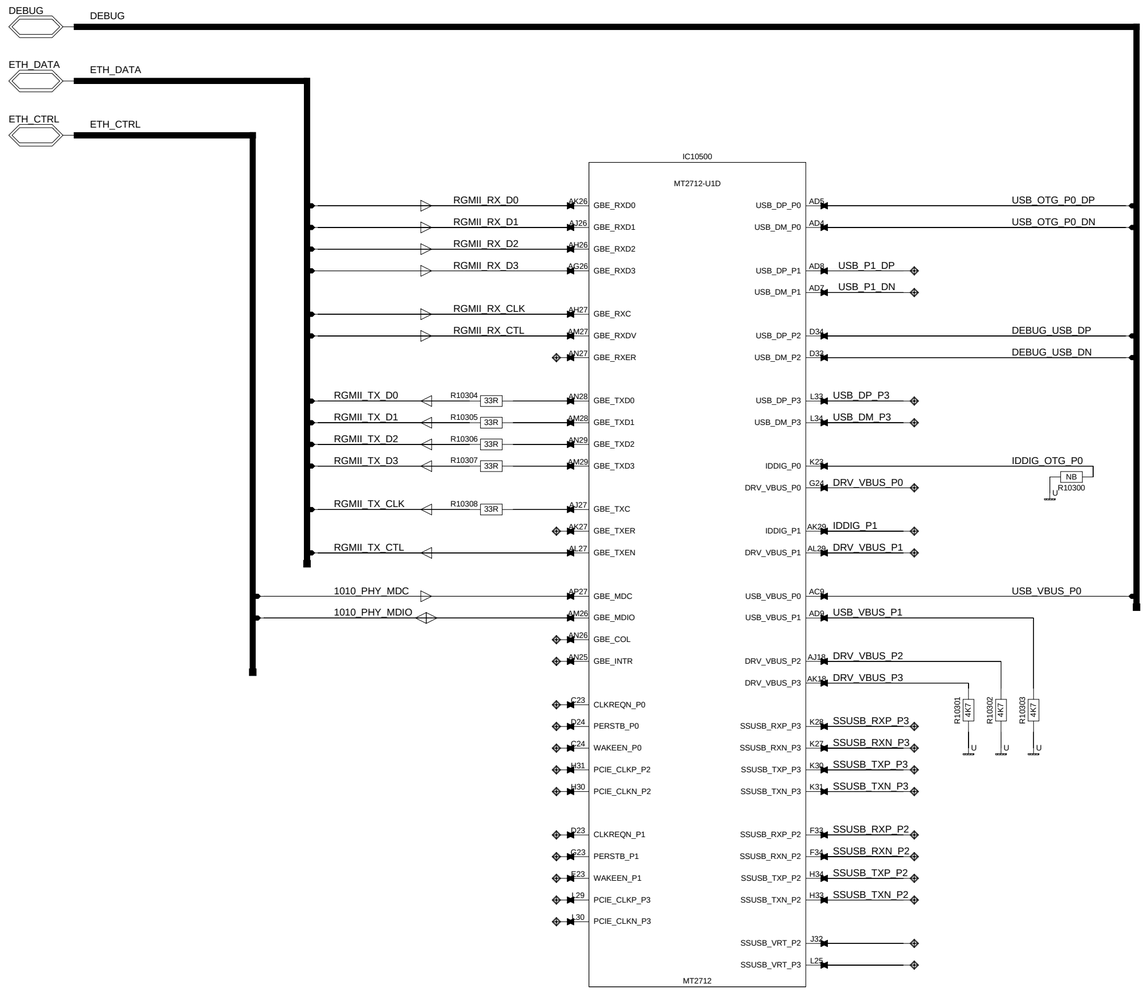

Rev.	type of change	change-no.	date of change	auth.	checked

HARMAN

Copyright reserved

Wiring modifications reserved

	date	name
created		
checked		

schematic

4010_SoC_ETH_PCIe_USB

Sheet	Sheets of	Sample
18	31	
Type	Variant	Part Number

substitute for: | substitute by:

A2 16.02.12

The reproduction, distribution and utilisation of this document as well as the communication of its contents to others without explicit authorization is prohibited. Offenders will be held liable for the payment of damages. All rights reserved in the event of the grant of a patent, utility model or design.

SOC_LPDDR4 (10400-10499)

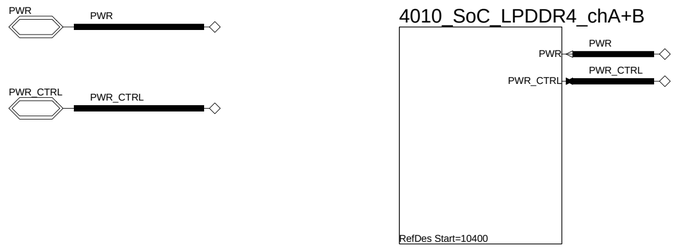

The reproduction, distribution and utilization of this document as well as the communication of its contents to others without explicit authorization is prohibited. Offenders will be held liable for the payment of damages. All rights reserved in the event of the grant of a patent, utility model or design.

Rev.	type of change	change-no.	date of change	auth.	checked

HARMAN

Copyright reserved

Wiring modifications reserved

	date	name
created		
checked		

schematic

4010_SoC_LPDDR4

Sheet	Sheets of	Sample
19	31	
Type	Variant	Part Number

substitute for:

substitute by:

A2 16.02.12

SOC_LPDDR4 (10400-10449)

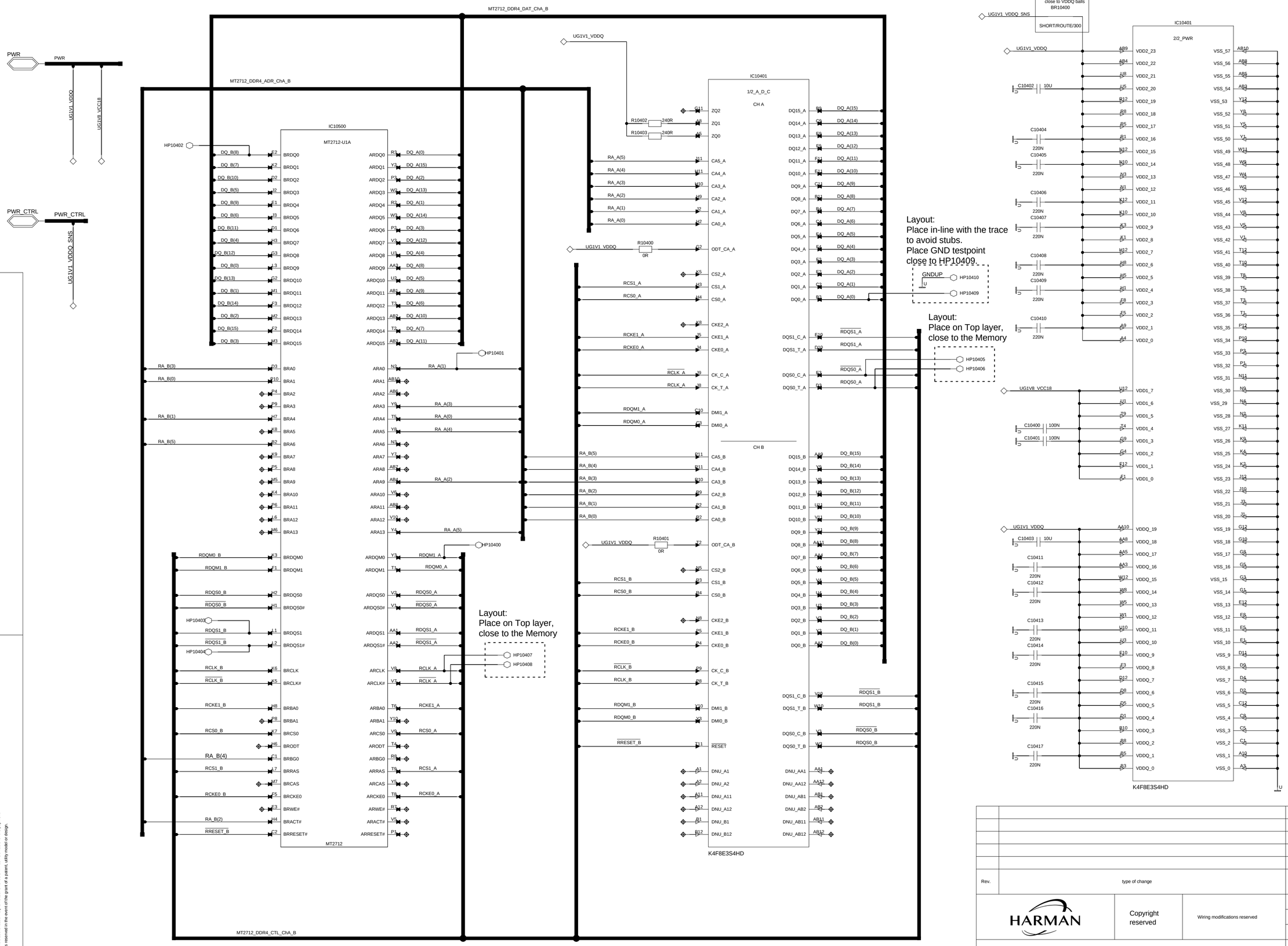

The reproduction, distribution and utilization of this document as well as the communication of its contents to others without explicit authorization is prohibited. Offenders will be held liable for the payment of damages. All rights reserved in the event of the grant of a patent, utility model or design.

Rev.	type of change	change-no.	date of change	auth.	checked

HARMAN

Copyright reserved

Wiring modifications reserved

	date	name
created		
checked		

schematic

4010_SoC_LPDDR4_chA+B

Sheet	Sheets of	Sample
20	31	
Type	Variant	Part Number

substitute for:

substitute by:

A2 16.02.12

SOC_LPDDR4 (10450-10499)

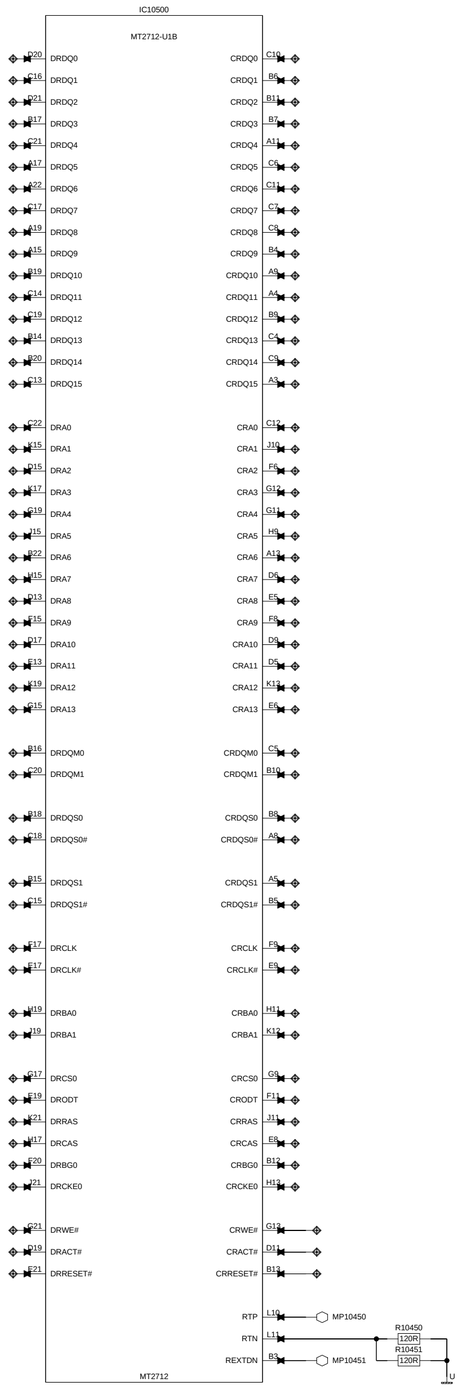

Rev.	type of change	change-no.	date of change	auth.	checked

HARMAN

Copyright reserved

Wiring modifications reserved

	date	name
created		
checked		

schematic

4010_SoC_LPDDR4_chC+D

Sheet	Sheets of	Sample
21	31	
Type	Variant	Part Number

substitute for:

substitute by:

A2 16.02.12

The reproduction, distribution and utilisation of this document as well as the communication of its contents to others without explicit authorization is prohibited. Offenders will be held liable for the payment of damages. All rights reserved in the event of the grant of a patent, utility model or design.

SOC_POWER (10500-10599)

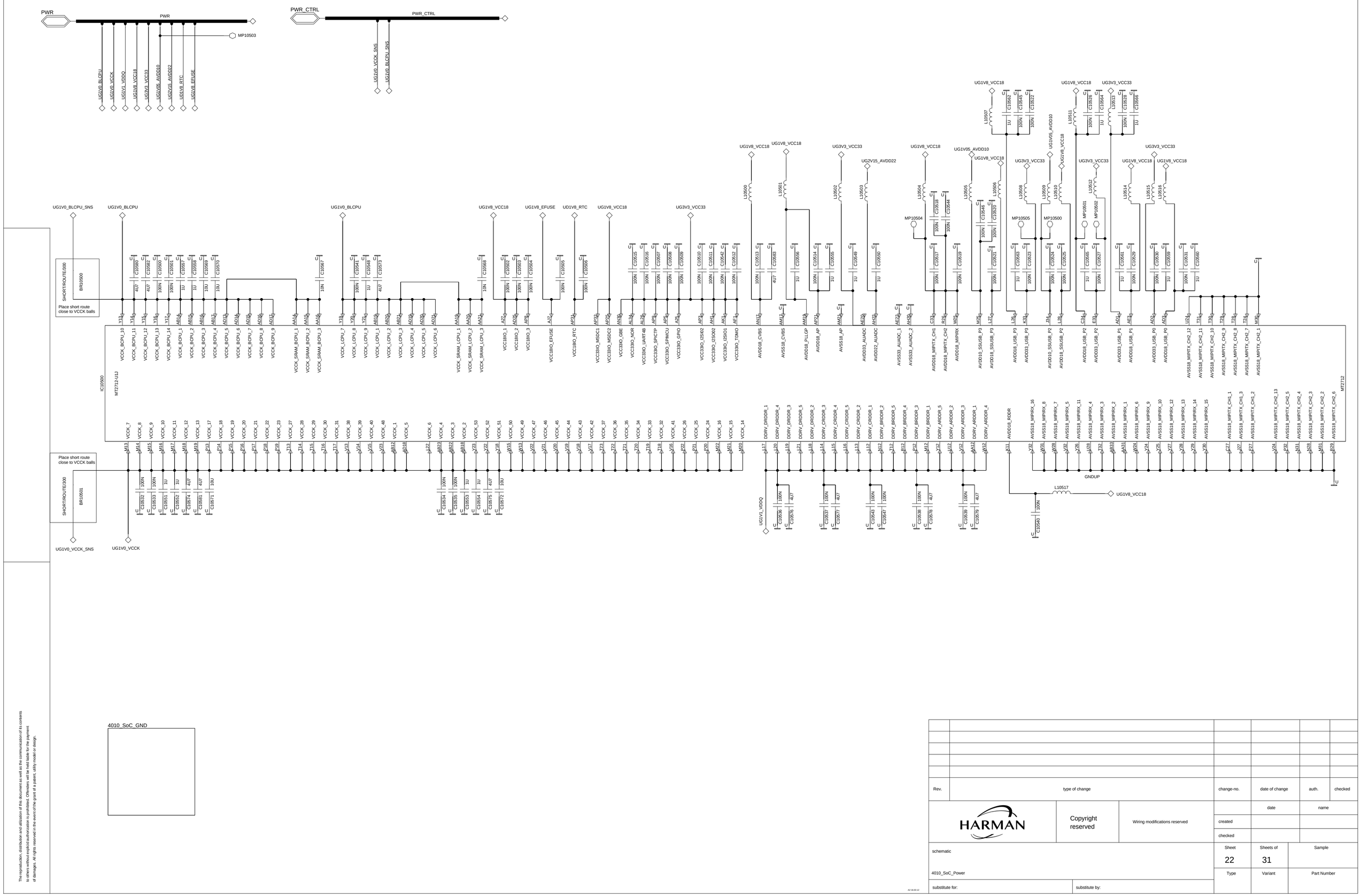

The reproduction, distribution and utilization of this document as well as the communication of its contents to others without explicit authorization is prohibited. Offenders will be held liable for the payment of damages. All rights reserved in the event of the grant of a patent, utility model or design.

Rev.	type of change	change-no.	date of change	auth.	checked

HARMAN

Copyright reserved

Wiring modifications reserved

	date	name
created		
checked		

schematic

4010_SoC_Power

substitute for:

substitute by:

Sheet	Sheets of	Sample
22	31	
Type	Variant	Part Number

A2 16.02.12

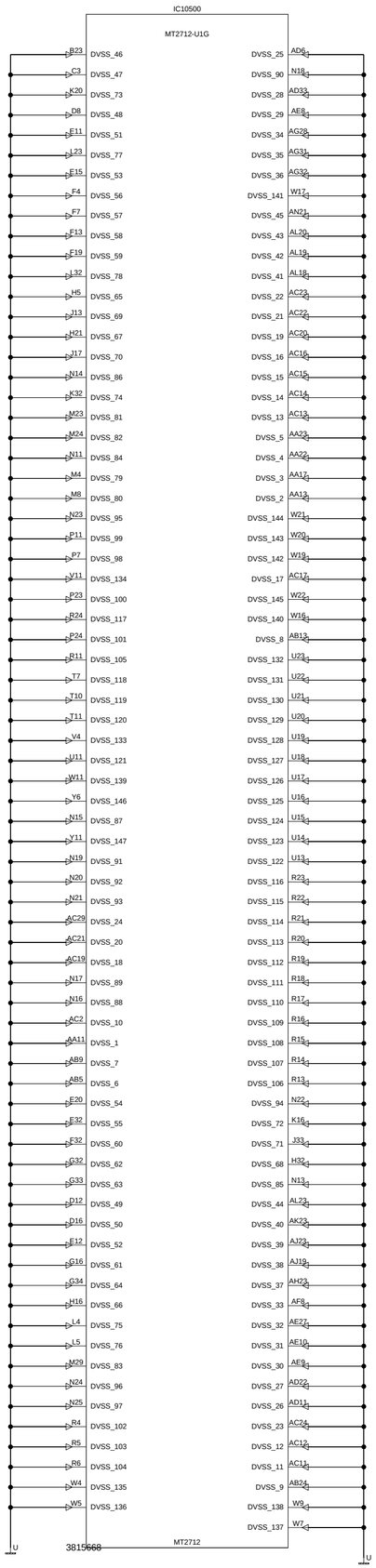

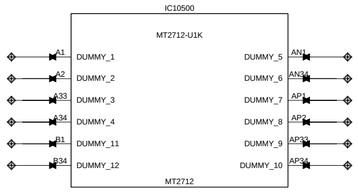

The reproduction, distribution and utilization of this document as well as the communication of its contents to others without explicit authorization is prohibited. Offenders will be held liable for the payment of damages. All rights reserved in the event of the grant of a patent, utility model or design.

Rev.	type of change	change-no.	date of change	auth.	checked

HARMAN

Copyright reserved

Wiring modifications reserved

	date	name
created		
checked		

schematic

4010_SoC_GND

Sheet	Sheets of	Sample
23	31	
Type	Variant	Part Number

substitute for:

substitute by:

A2 16.02.12

SOC_SERIAL_IF (10200-10299)

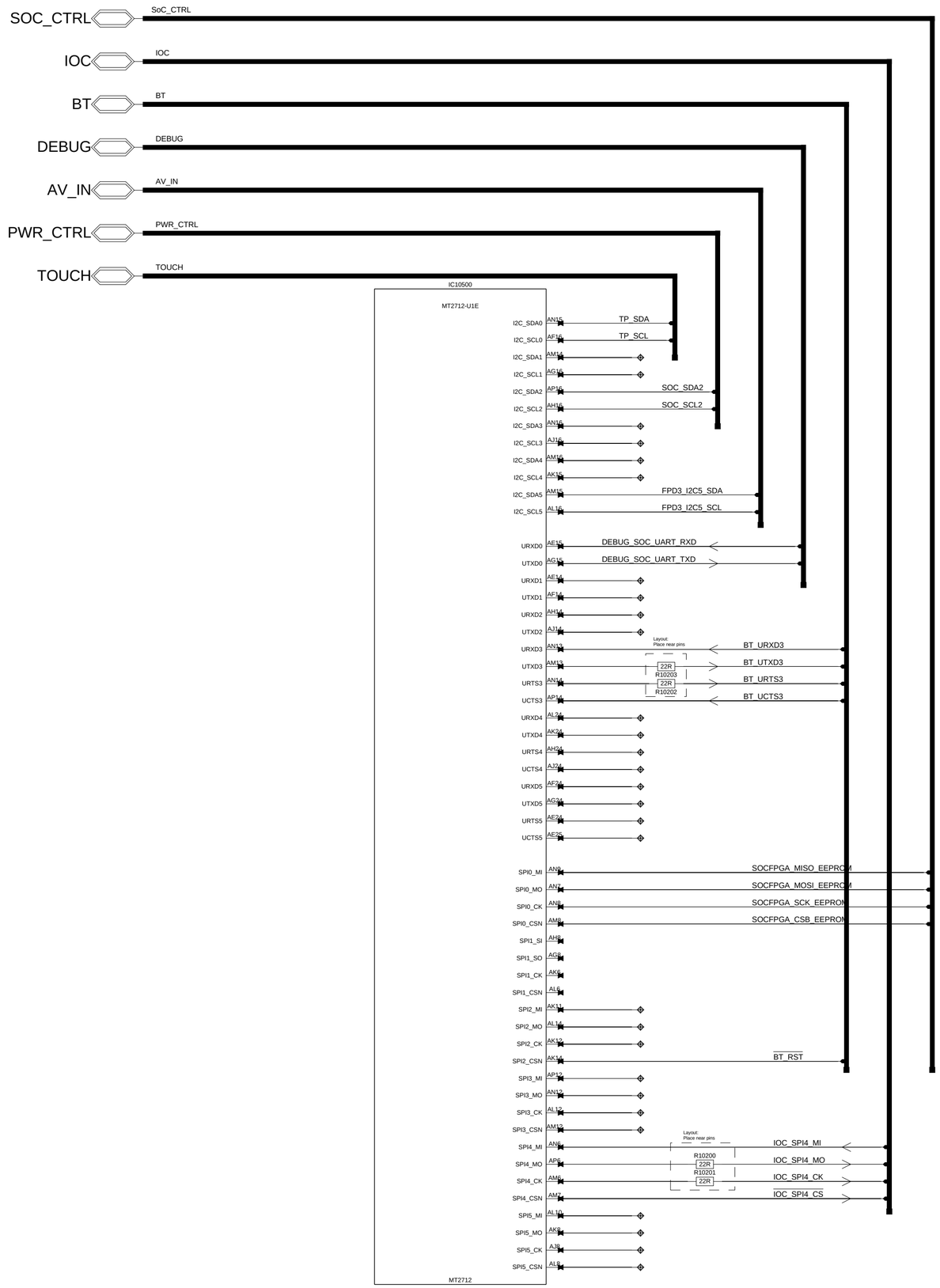

Rev.	type of change	change-no.	date of change	auth.	checked

HARMAN

Copyright reserved

Wiring modifications reserved

	date	name
created		
checked		

schematic

4010_SoC_Serial_IF

Sheet	Sheets of	Sample
24	31	
Type	Variant	Part Number

substitute for: | substitute by:

A2 16.02.12

The reproduction, distribution and utilization of this document as well as the communication of its contents to others without explicit authorization is prohibited. Offenders will be held liable for the payment of damages. All rights reserved in the event of the grant of a patent, utility model or design.

SOC_VIDEO (10700-10799)

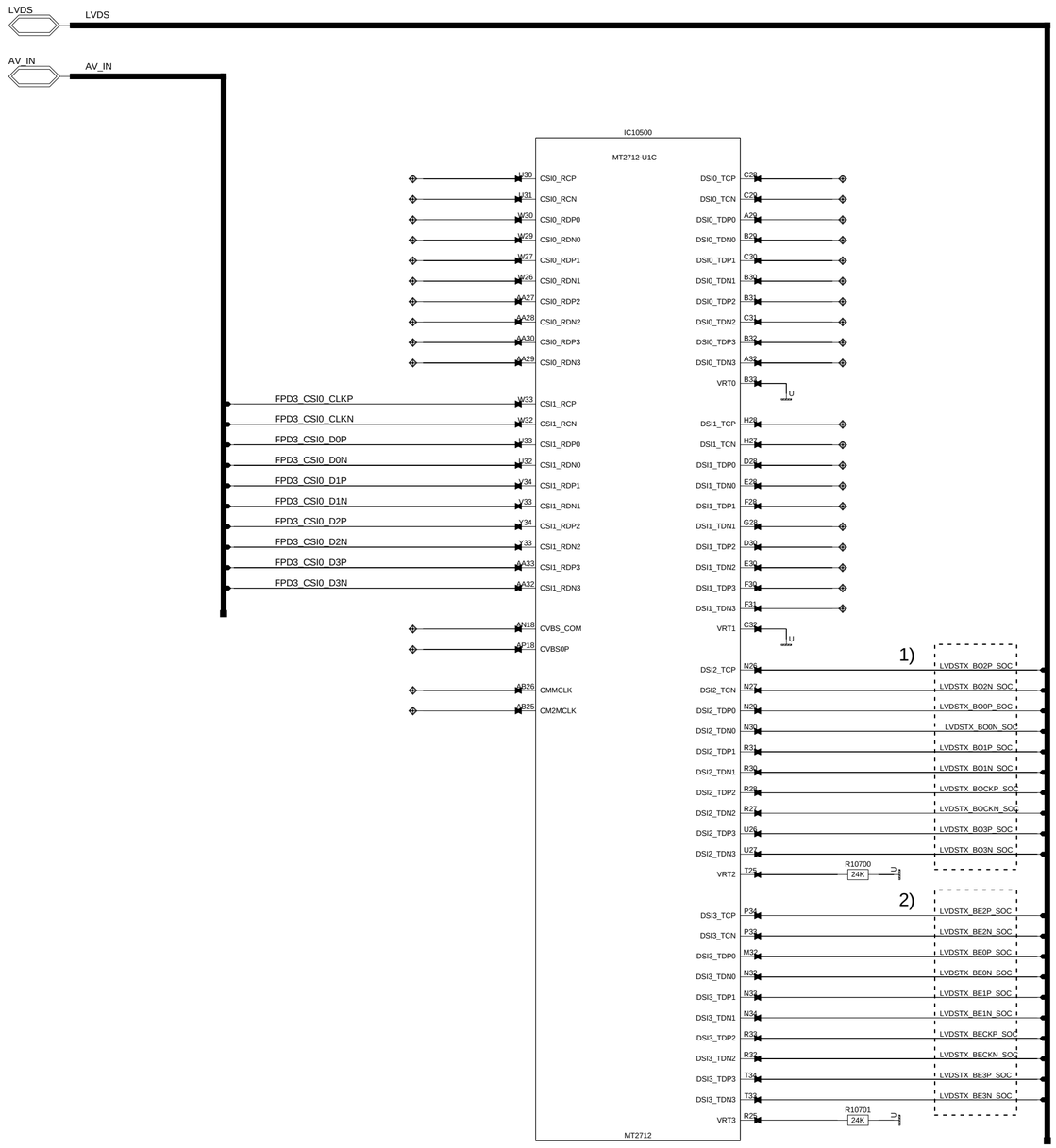

1) - Route as differential pair signals.
- Differential impedance: 100ohm (±10%)
- Maximum intra-pair skew: 0.127mm (5mils)
- Maximum skew from clock (BOCK) to data (BO[0-3]): 5mm

2) - Route as differential pair signals.
- Differential impedance: 100ohm (±10%)
- Maximum intra-pair skew: 0.127mm (5mils)
- Maximum skew from clock (BECK) to data (BE[0-3]): 5mm

The reproduction, distribution and utilization of this document as well as the communication of its contents to others without explicit authorization is prohibited. Offenders will be held liable for the payment of damages. All rights reserved in the event of the grant of a patent, utility model or design.

Rev.	type of change	change-no.	date of change	auth.	checked

HARMAN

Copyright reserved

Wiring modifications reserved

	date	name
created		
checked		

schematic

4010_SoC_Video

Sheet	Sheets of	Sample
25	31	
Type	Variant	Part Number

substitute for:

substitute by:

A2 16.02.12

SOC_eMMC_NAND_SID (10100-10199)

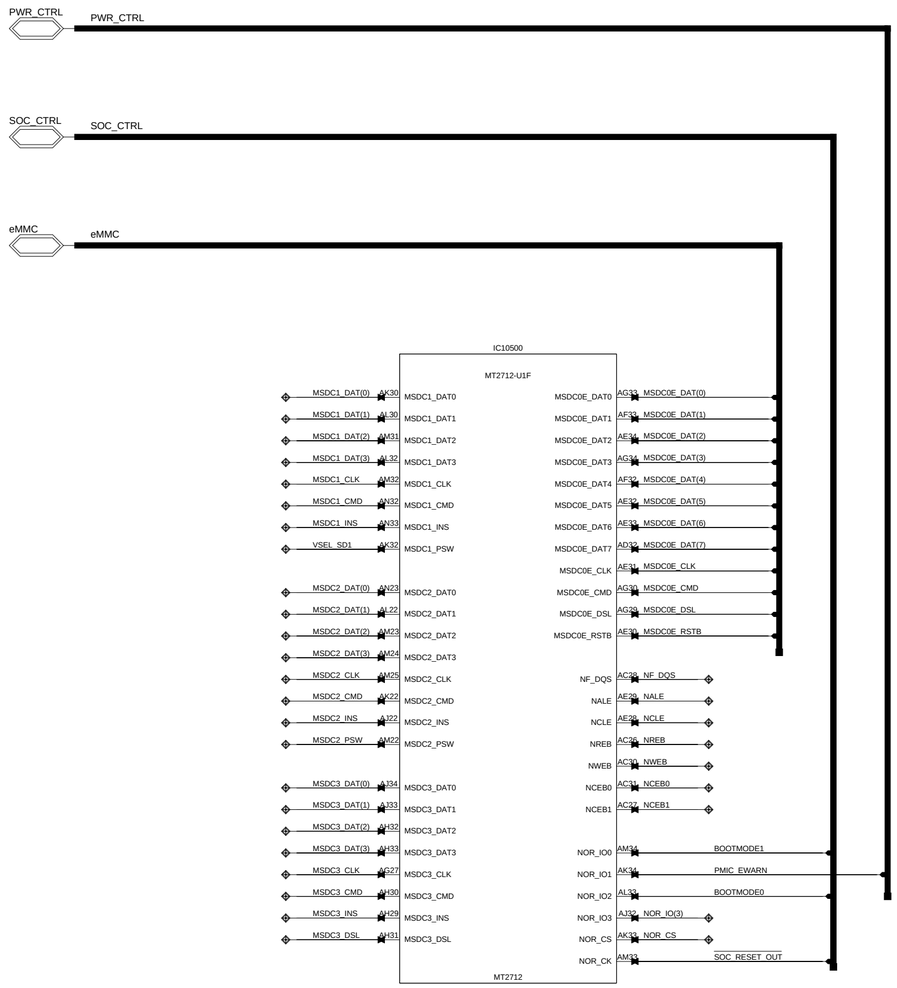

The reproduction, distribution and utilization of this document as well as the communication of its contents to others without explicit authorization is prohibited. Offenders will be held liable for the payment of damages. All rights reserved in the event of the grant of a patent, utility model or design.

Rev.	type of change	change-no.	date of change	auth.	checked

HARMAN

Copyright reserved

Wiring modifications reserved

	date	name
created		
checked		

schematic

4010_SoC_eMMC_NAND_SD

Sheet	Sheets of	Sample
26	31	
Type	Variant	Part Number

substitute for:

substitute by:

A2 16:02:12

TFT BL (6900-6999)

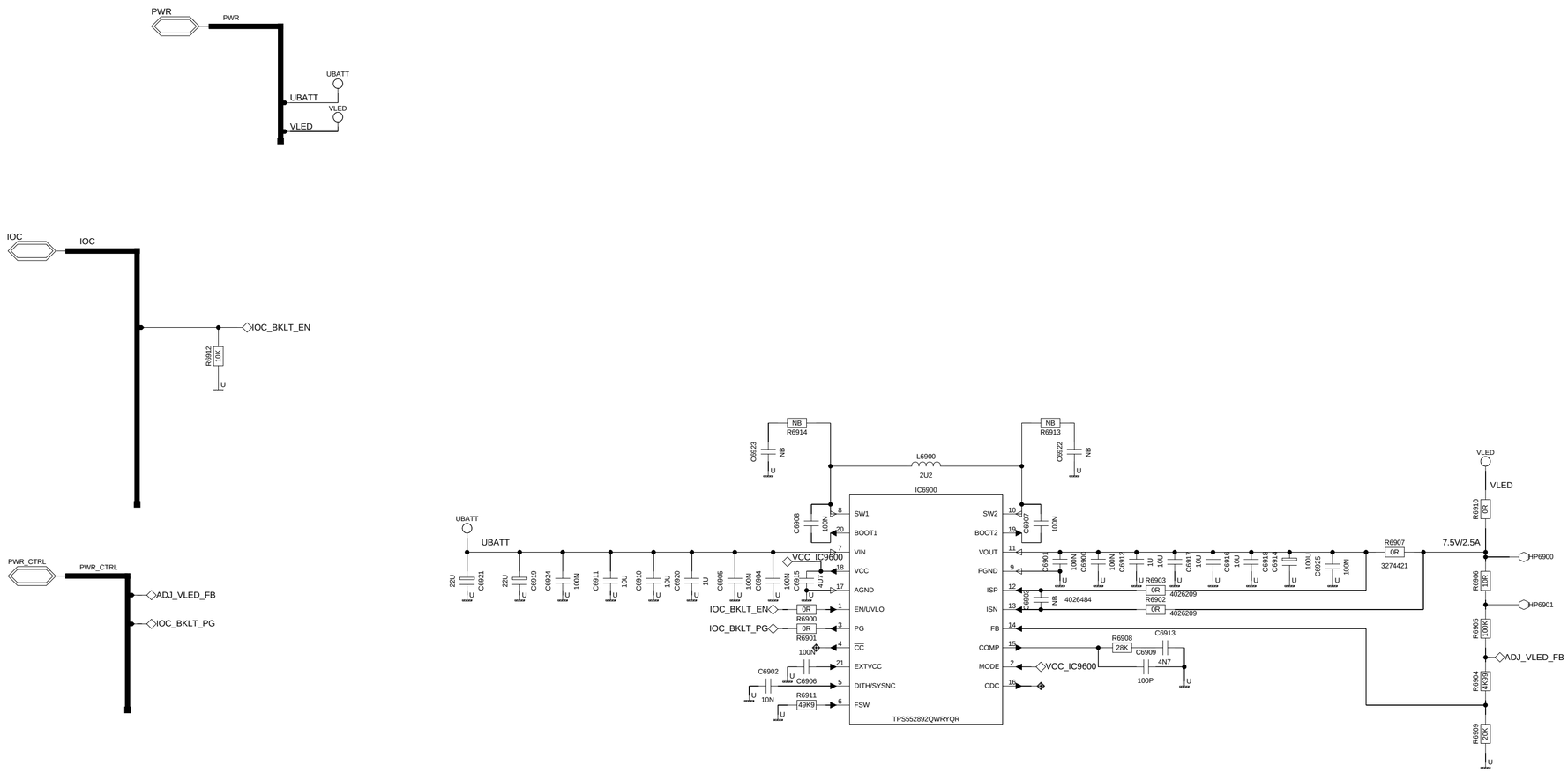

The reproduction, distribution and utilization of this document as well as the communication of its contents to others without explicit authorization is prohibited. Offenders will be held liable for the payment of damages. All rights reserved in the event of the grant of a patent, utility model or design.

Rev.	type of change	change-no.	date of change	auth.	checked

HARMAN

Copyright reserved

Wiring modifications reserved

	date	name
created		
checked		

schematic

4010_TFT_BL

substitute for:

substitute by:

Sheet	Sheets of	Sample
27	31	
Type	Variant	Part Number
	C143	

A2 16.02.12

False
1
1
4010_TFT_BL

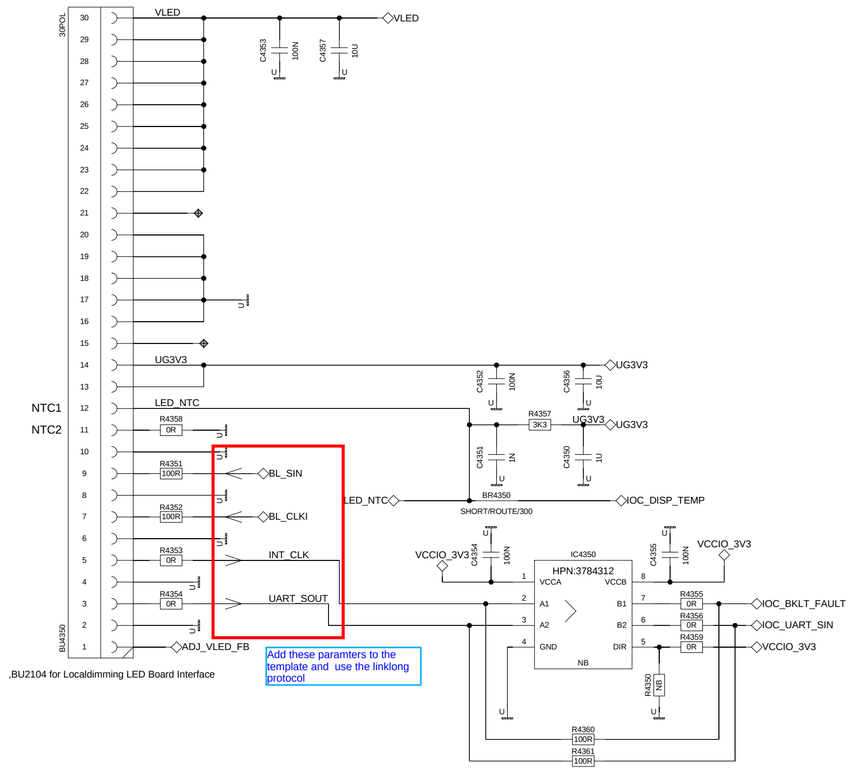

,BU2104 for Localdimming LED Board Interface

Add these paramters to the template and use the linklong protocol

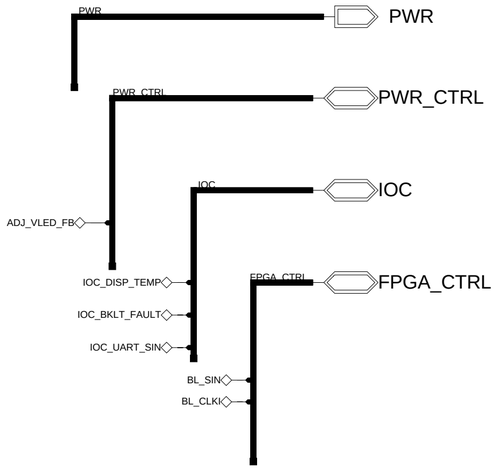

Rev.	type of change	change-no.	date of change	auth.	checked

HARMAN

Copyright reserved

Wiring modifications reserved

	date	name
created		
checked		

schematic

4010_TFT_BL_Conn

substitute for:

substitute by:

Sheet	Sheets of	Sample
28	31	
Type	Variant	Part Number
	C143	

A2 16.02.12

The reproduction, distribution and utilization of this document as well as the communication of its contents to others without explicit authorization is prohibited. Offenders will be held liable for the payment of damages. All rights reserved in the event of the grant of a patent, utility model or design.

False

TFT_CONNECTOR (4300-4399)

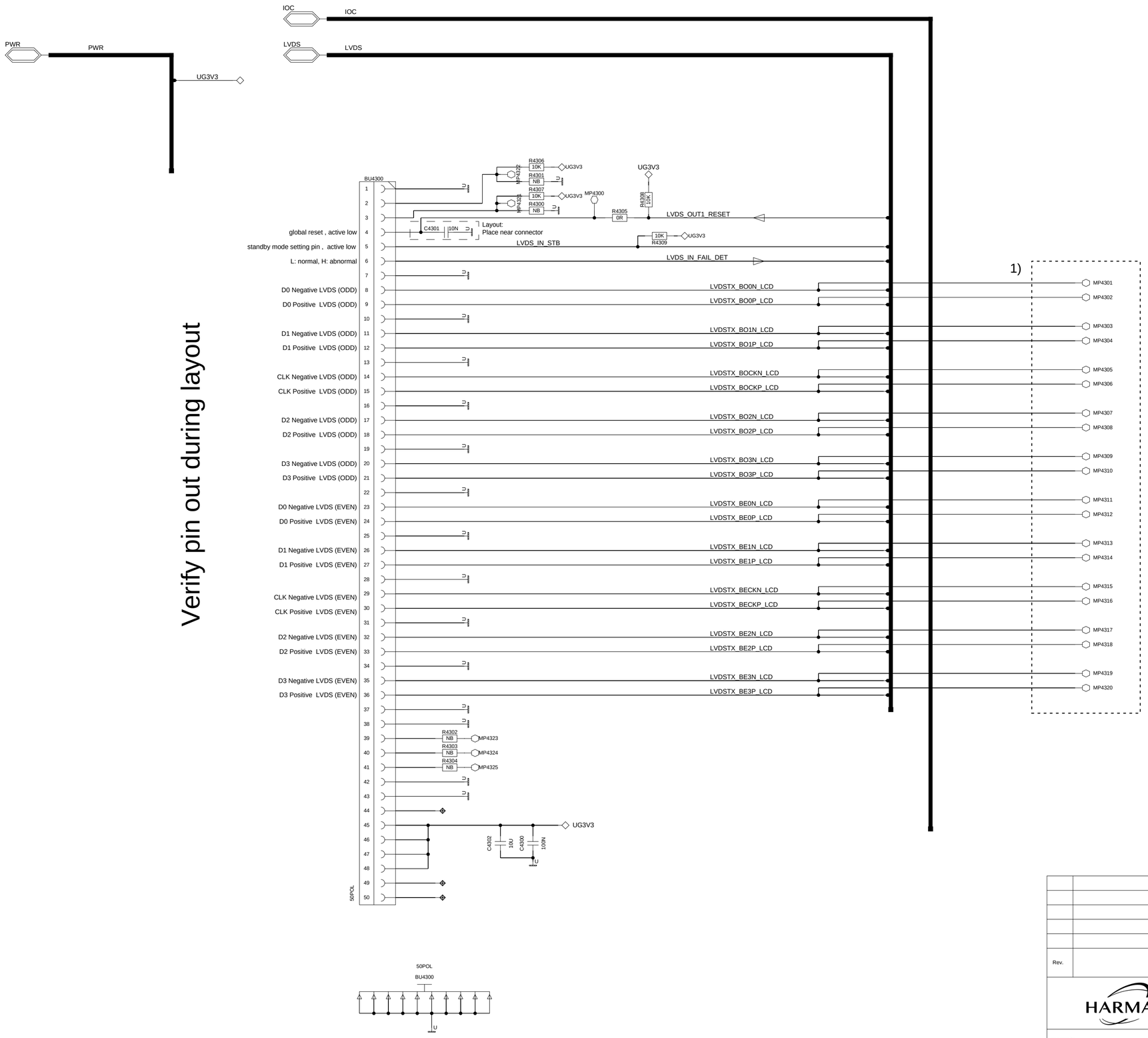

Verify pin out during layout

1) Testpoints should be placed as close as possible to an existing VIA

Rev.	type of change	change-no.	date of change	auth.	checked

HARMAN

Copyright reserved

Wiring modifications reserved

	date	name
created		
checked		

schematic

4010_TFT_Conn

Sheet	Sheets of	Sample
29	31	
Type	Variant	Part Number
	C143	

substitute for:

substitute by:

A2 16.02.12

The reproduction, distribution and utilization of this document as well as the communication of its contents to others without explicit authorization is prohibited. Offenders will be held liable for the payment of damages. All rights reserved in the event of the grant of a patent, utility model or design.

False

VIDEO_DES (4100-4199)

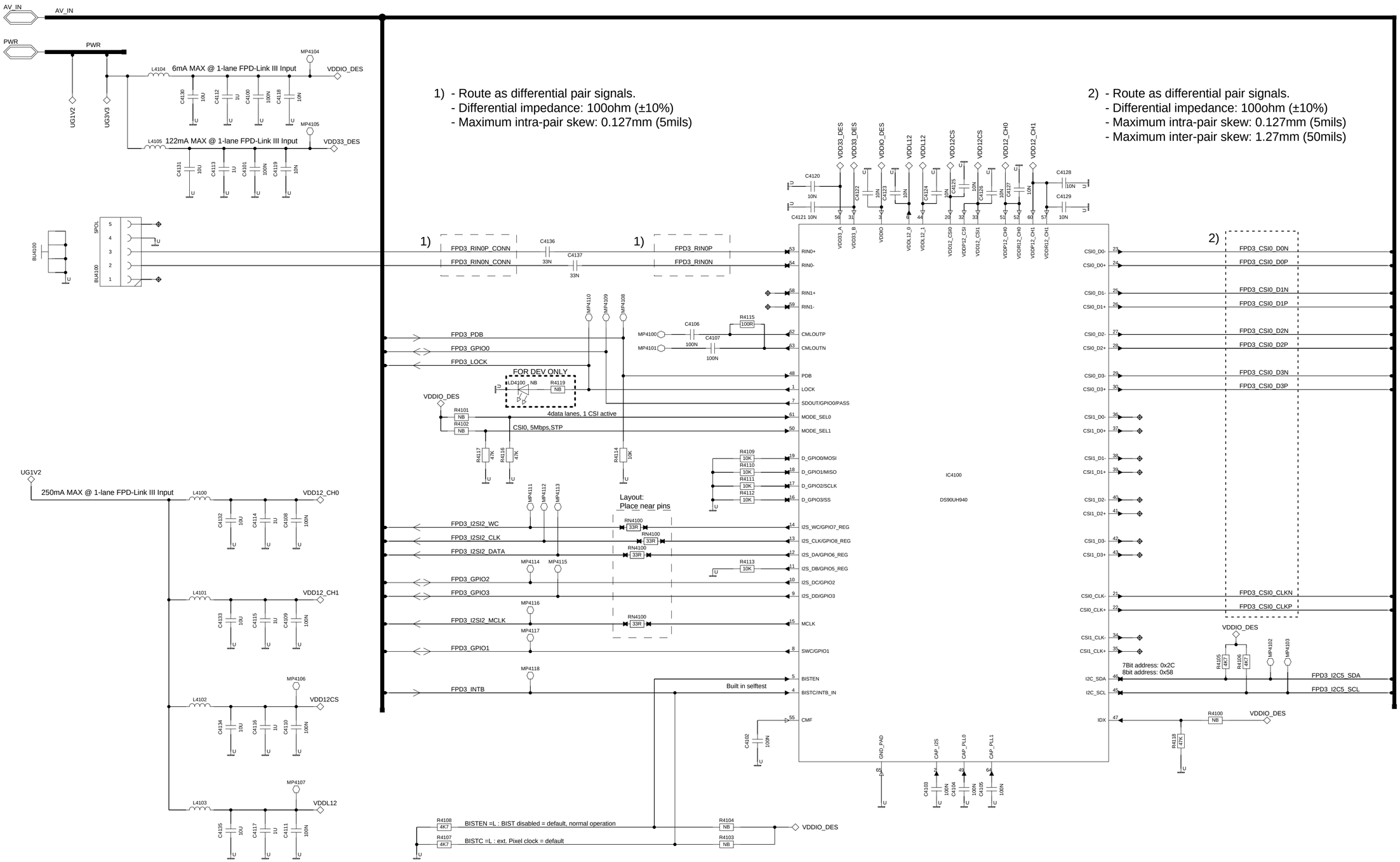

Rev.	type of change	change-no.	date of change	auth.	checked

HARMAN

Copyright reserved

Wiring modifications reserved

	date	name
created		
checked		

schematic

4010_VIDEO_DES

substitute for:

substitute by:

Sheet	Sheets of	Sample
30	31	
Type	Variant	Part Number
	C143	

The reproduction, distribution and utilization of this document as well as the communication of its contents to others without explicit authorization is prohibited. Offenders will be held liable for the payment of damages. All rights reserved in the event of the grant of a patent, utility model or design.

False
4010_VIDEO_DES

eMMC (2250-2299)

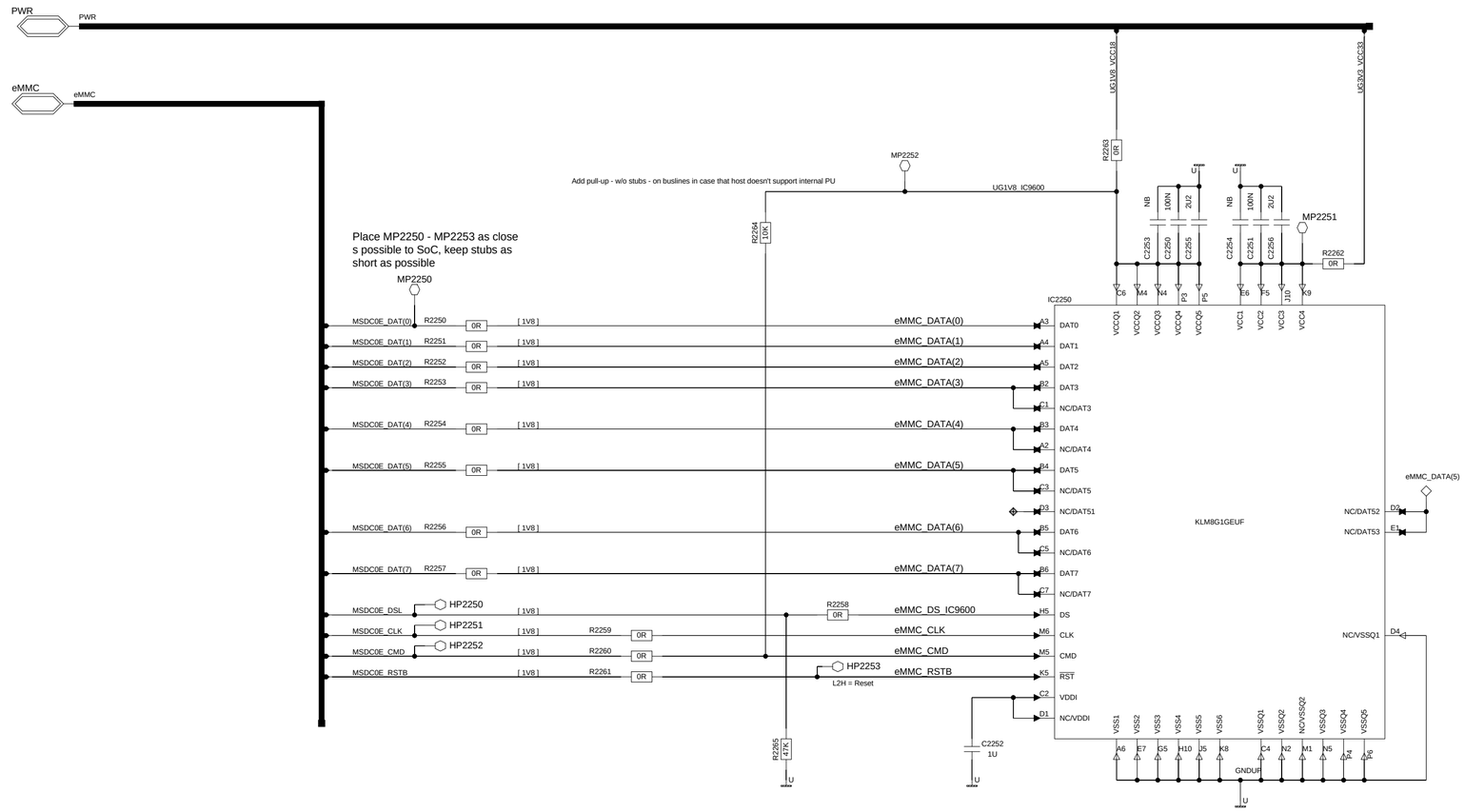

eMMC	Density	Part Number
Micron (-40 to 105°C)	8 GB	3881466
Micron (-40 to 85°C)	8 GB	3543617

The reproduction, distribution and utilization of this document as well as the communication of its contents to others without explicit authorization is prohibited. Offenders will be held liable for the payment of damages. All rights reserved in the event of the grant of a patent, utility model or design.

Rev.	type of change	change-no.	date of change	auth.	checked

HARMAN

Copyright reserved

Wiring modifications reserved

	date	name
created		
checked		

schematic

4010_eMMC

Sheet	Sheets of	Sample
31	31	

Type	Variant	Part Number

substitute for:

substitute by:

A2 16.02.12

False