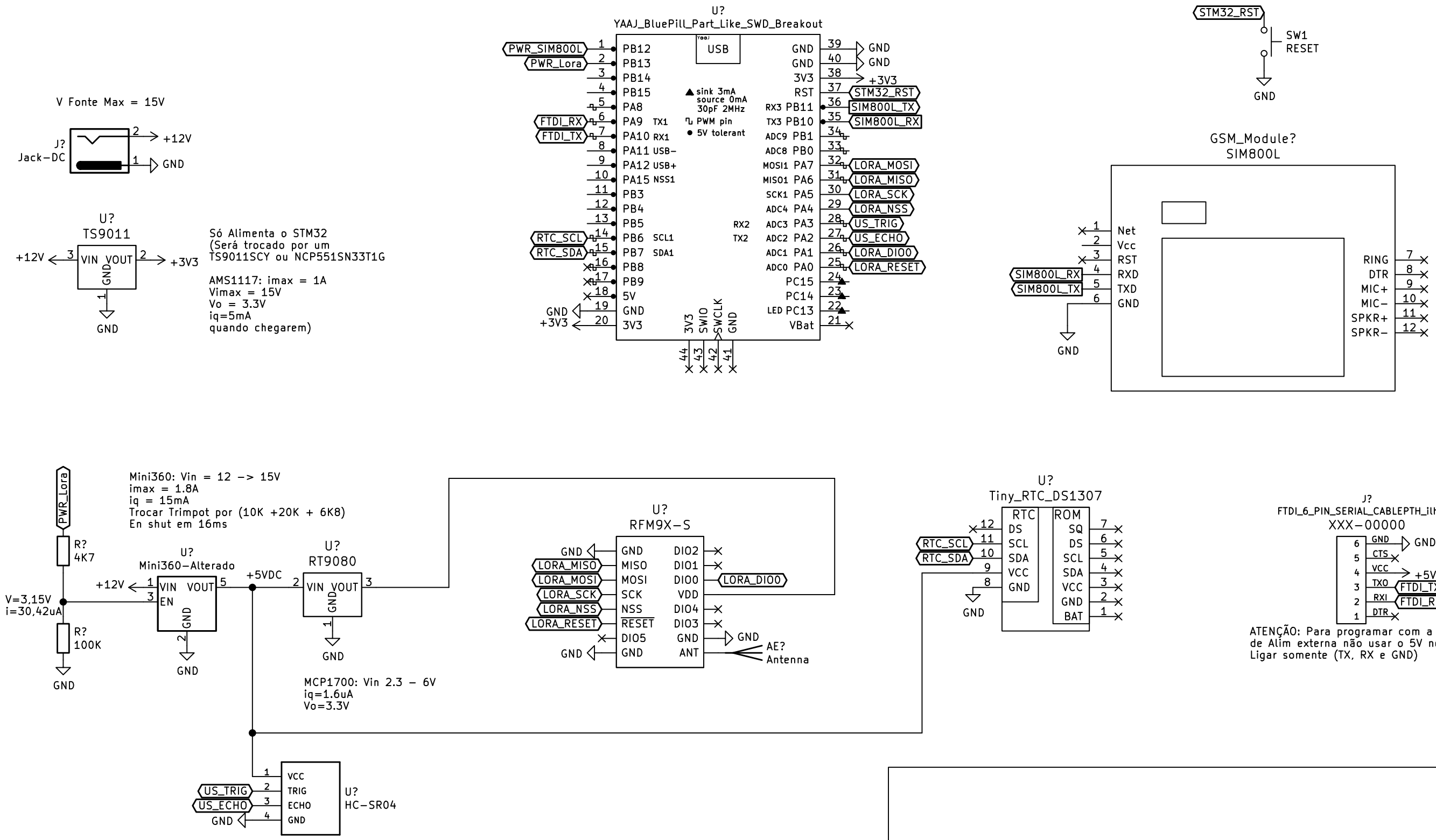


Sheet: /
File: Transmissor_STM32_BluePill_V1.sch

**Title:**

| Size: A4 | Date: | **Rev:** |
|---|---|---|
| KiCad E.D.A. eeschema (5.1.5)-3 | | Id: 1/1 |