# ESP32-C3 Breadboard Adapter

*Release 5.8*

**Alexander Bobkov**

**Dec 03, 2024**

# CONTENTS:


**1 About** **3**

**2 Schematic** **5**
2.1 GPIOs . . . . . 7

**3 Examples** **9**
3.1 MicroPython Blinky Example . . . . . 9

**4 Learning Activities** **11**
4.1 Measure Temperature, Pressure, and Humidity . . . . . 11

**5 Bill of Materials** **13**

**6 Index** **15**

**Index** **17**

Add your content using `reStructuredText` syntax. See the reStructuredText documentation for details.

CHAPTER

ONE

# ABOUT

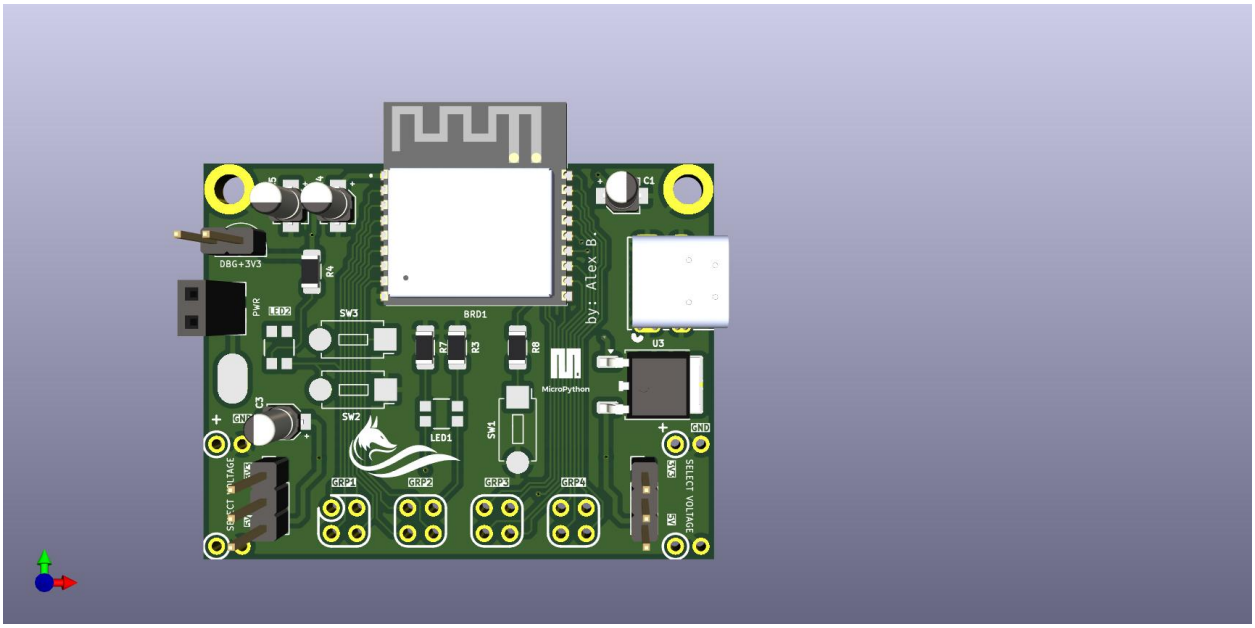


Has smaller footprint and uses less area on the breadboard. GPIOs pins are convenient to use.

**Features:**

- compact size requires very little space on a breadboard;
- connects to the power rails on a breadboard;
- can be powered by USB-C port or external power supply;
- 3.3V and 5V power supplies;
- GPIOs arranged into 4 groups for easier identification;
- on-board *ESP32-C3* Module with USB-C port allows to flash a firmware as you work with breadboard;
- debugging points;
- power pads makes it easy to connect alligators supplying voltage to the board;
- on-board system LEDs: power, and module reset mode;
- on-board push switch for Reset and Flash modes;
- on-board push switch and LED for your needs;

**ESP32-C3 Module:**

- single-core
- 32-bit RISC-V MCU @ 160 MHz
- 400 KB of internal RAM
- RSA-3072-based secure boot and the AES-128/256-XTS flash encryption
- low power-mode support
- Rich connectivity for IoT applications: Wi-Fi and Bluetooth 5 (LE) with long-range support
- Bluetooth LE SIG Mesh and Wi-FI Mesh support
- 22 GPIOs

**See also:**

MicroPython Demo Code MicroPython demo code is available

CHAPTER

# TWO

# SCHEMATIC

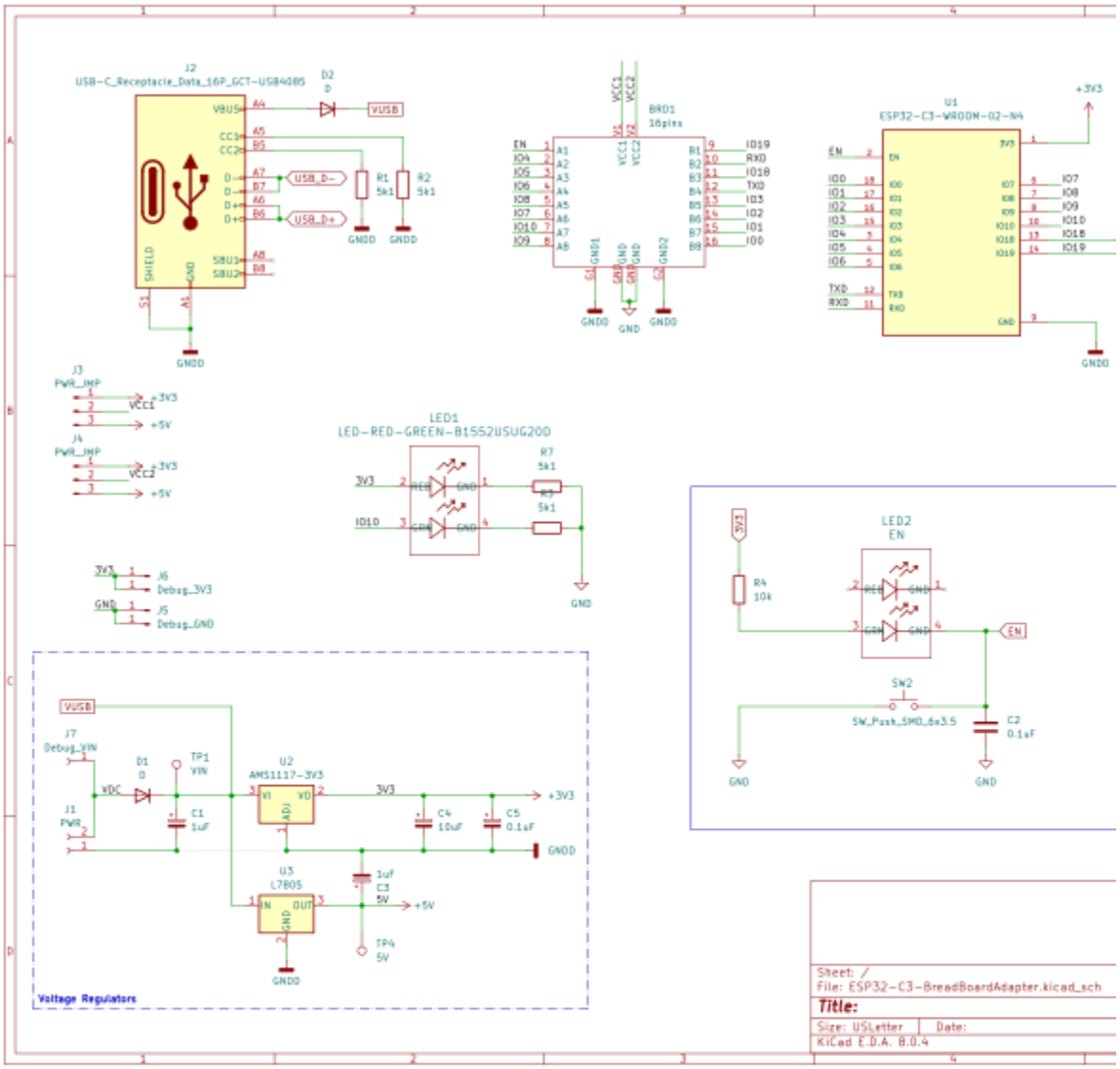

## 2.1 GPIOs

Table 1: GPIOs

| Pin | GPIO | Description |
|---|---|---|
| 7 | GPIO10 | Onboard LED |
| 13 | GPIO18 | USB_D- |
| 14 | GPIO19 | USB_D+ |
| 13 | GPIO3 | Onboard button |
| TXD | TXD | UART Transmit data |
| RXD | RXD | UART Receive data |

CHAPTER

THREE

# EXAMPLES

## 3.1 MicroPython Blinky Example

```python
import machine
from machine import Pin
import time, math

ONBOARD_LED = 10    # GPIO10, PIN 7
ONBOARD_BTN = 3     # GPIO3, 13

# Configure on-board LED and push button
# Stated GPIOs correspond to the wiring schematic
onboard_button = Pin(ONBOARD_BTN, Pin.IN, Pin.PULL_UP)

led = machine.PWM(ONBOARD_LED, freq=1000)

def pulse(l, t):
    for i in range(20):
        l.duty(int(math.sin(i/10 * math.pi) * 500 + 500))
        time.sleep_ms(t)
    l.duty(0)

# Interrupt function to turn LED ON when on-board button is pressed
def button_interrupt(pin):
    pulse(led, 70)

def main():

    # Assign interrupt to the on-board push button
    onboard_button.irq(trigger=Pin.IRQ_FALLING, handler=button_interrupt)

if __name__ == '__main__':
    main()
```

CHAPTER

# FOUR

# LEARNING ACTIVITIES

## 4.1 Measure Temperature, Pressure, and Humidity

CHAPTER

FIVE

# BILL OF MATERIALS

The table below lists components required for this project.

Table 1: Bill of Materials

| Item | Part # | Qty | Description |
|---|---|---|---|
| Row 1, Column 1 | | | Row 1, Column 2 |
| Row 2, Column 1 | Row 2, Column 2 | Row 2, Column 3 | Row 2, Column 4 |

CHAPTER

SIX

# INDEX

*ESP32-C3* Espressif microcontroller ESP32-C3

- genindex
- search

# INDEX

## E

ESP32
    microcontroller, 15
ESP32-C3, **15**
execution
    context, 15