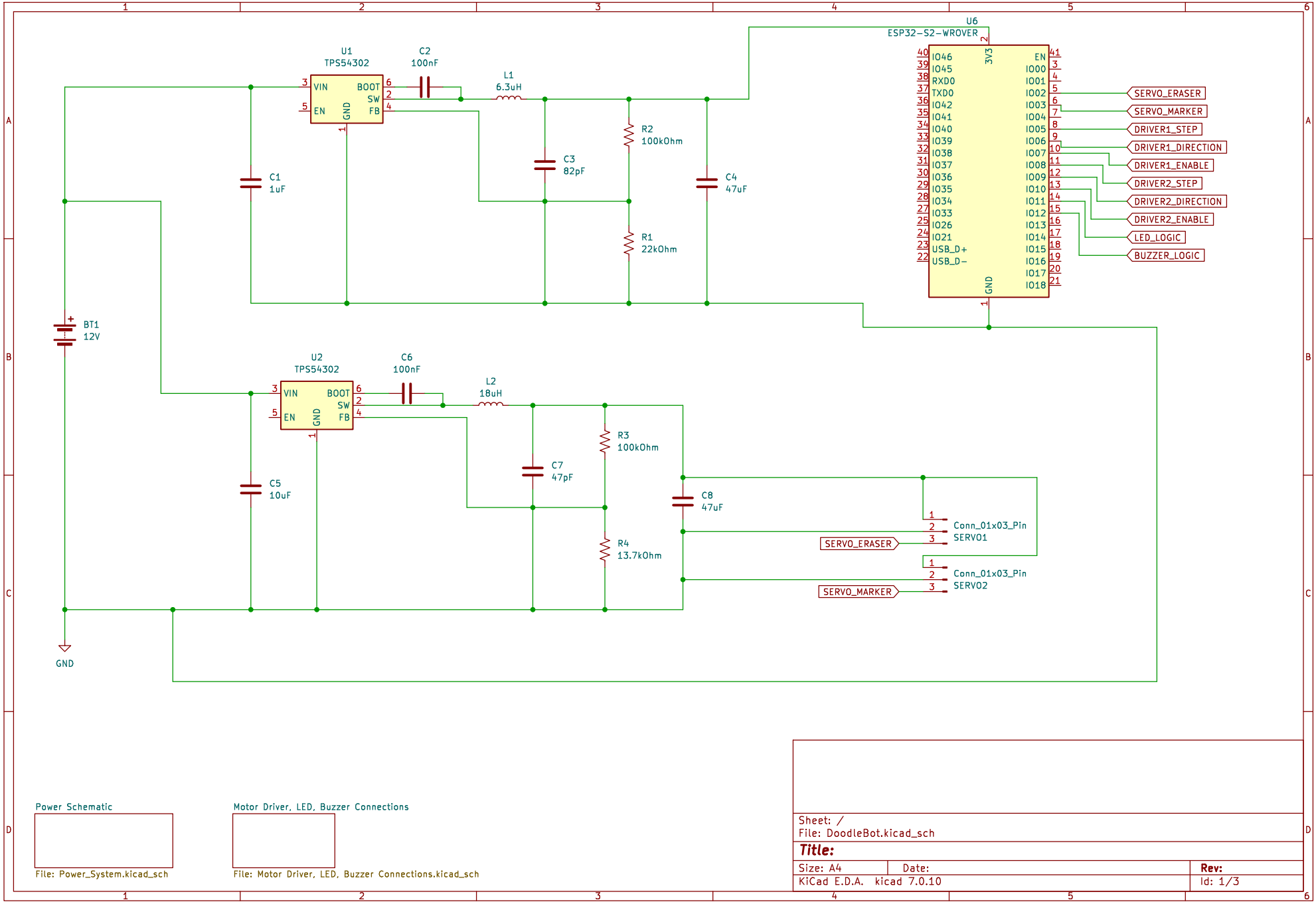

Power Schematic

File: Power_System.kicad_sch

Motor Driver, LED, Buzzer Connections

File: Motor Driver, LED, Buzzer Connections.kicad_sch

Sheet: /
File: DoodleBot.kicad_sch

Title:

Size: A4	Date:	Rev:
KiCad E.D.A. kicad 7.0.10		Id: 1/3

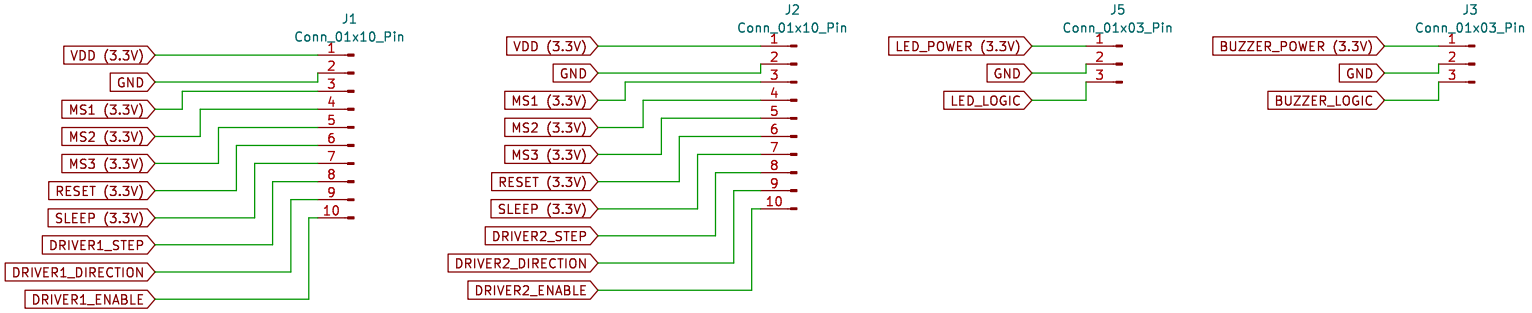

Sheet: /Motor Driver, LED, Buzzer Connections/
File: Motor Driver, LED, Buzzer Connections.kicad_sch

Title:

Size: A4	Date:	**Rev:**
KiCad E.D.A. kicad 7.0.10		Id: 3/3