USB Type-C

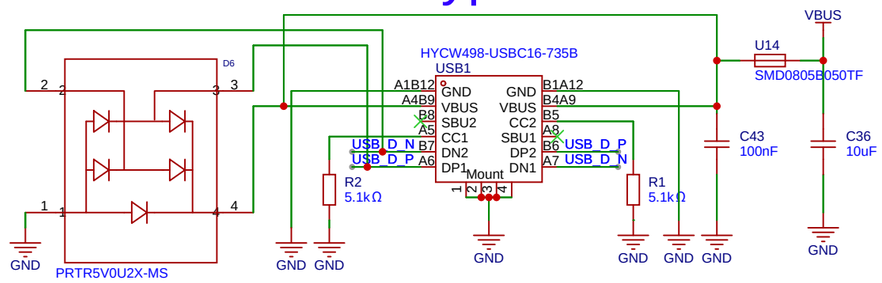

Power & VCC Select

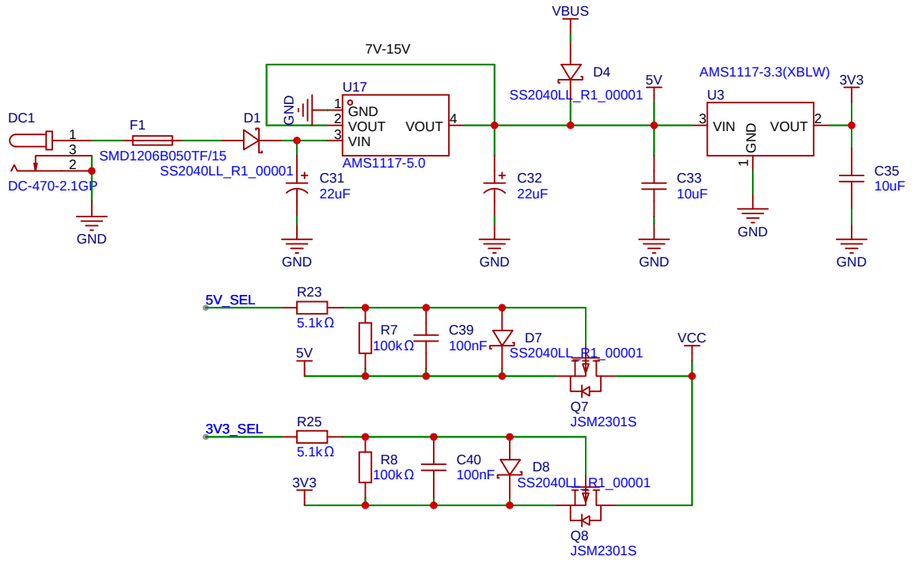

SW & PH

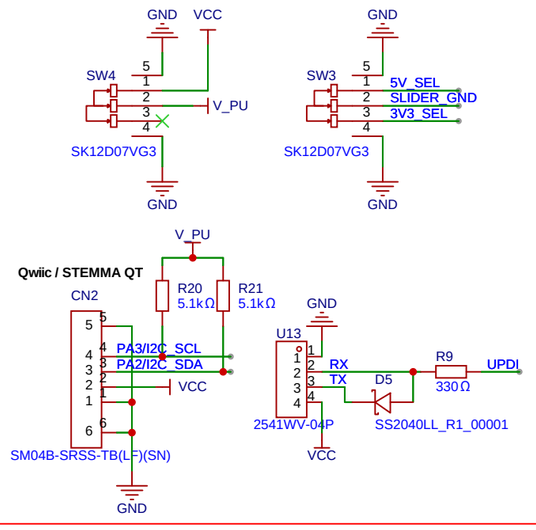

uC Reset BTN

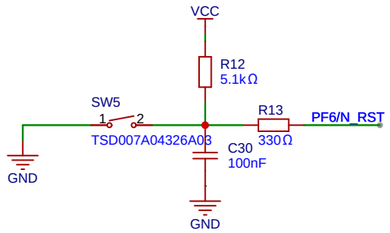

UART-to-USB

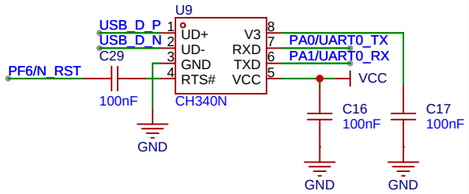

Microcontroller

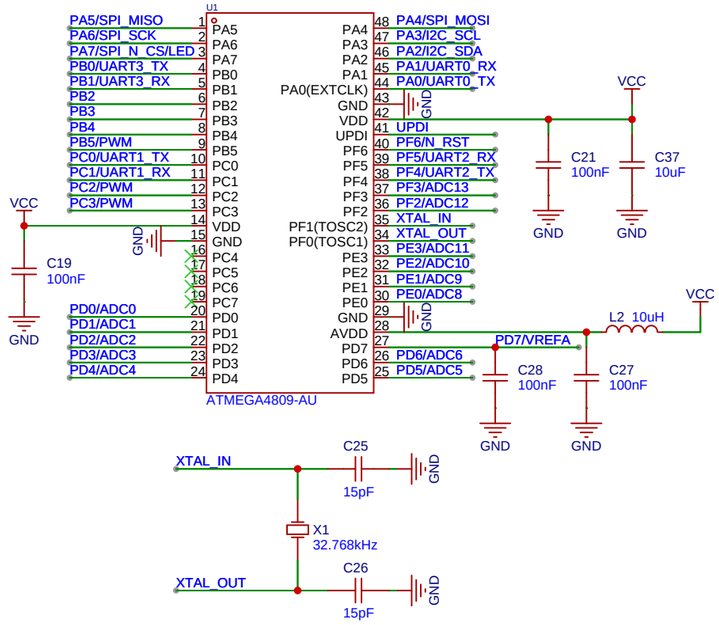

Connectors

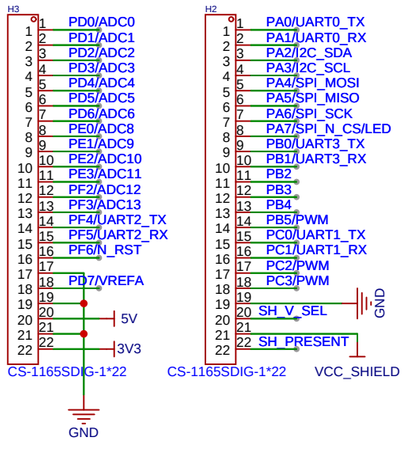

LEDs

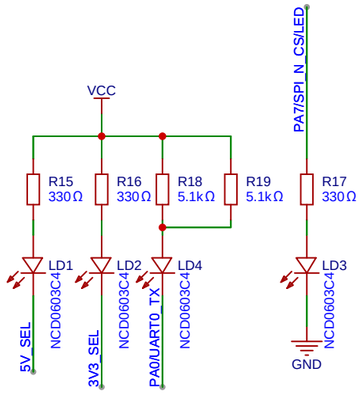

Shield Voltage Logic

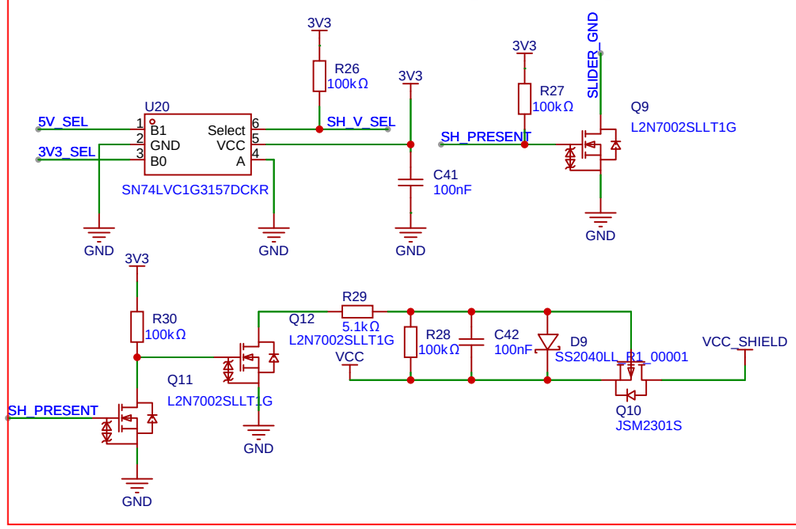

Embedu V1

Schematic	SCH_Embedo_V3	Create at	2026-02-27
		Update at	2026-03-06
Board	Embevo_V3	Page	P1
Drawn		Embedo	
Reviewed			
		Version	Size	Page 1 Total 1
EasyEDA		V1.0	A4	EasyEDA.com