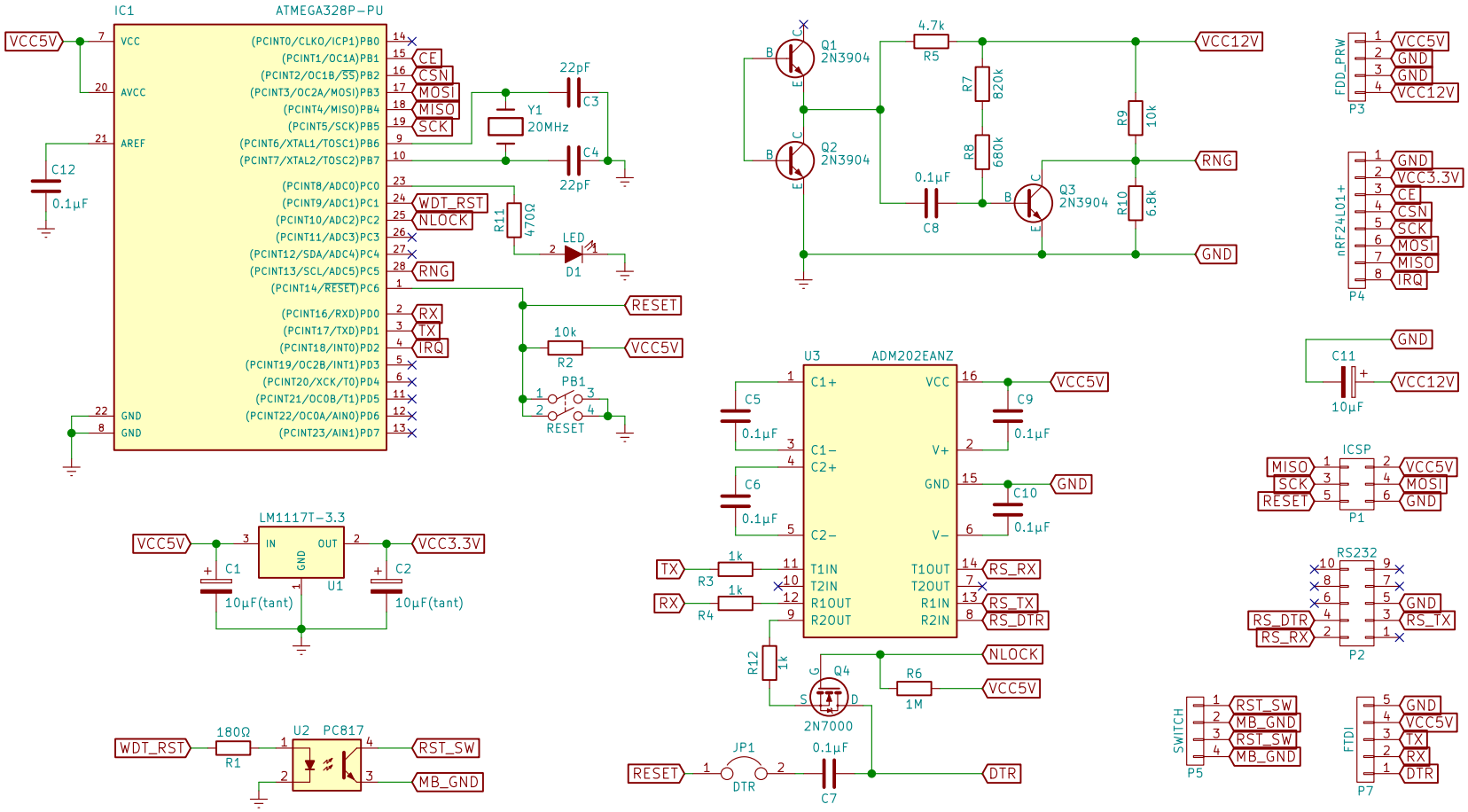
IC1
ATMEGA328P-PU
VCC5V
VCC
AVCC
AREF
GND
GND
C12
0.1µF
(PCINT0/CLKO/ICP1)PB0
(PCINT1/OC1A)PB1
(PCINT2/OC1B/SS)PB2
(PCINT3/OC2A/MOSI)PB3
(PCINT4/MISO)PB4
(PCINT5/SCK)PB5
(PCINT6/XTAL1/TOSC1)PB6
(PCINT7/XTAL2/TOSC2)PB7
(PCINT8/ADC0)PC0
(PCINT9/ADC1)PC1
(PCINT10/ADC2)PC2
(PCINT11/ADC3)PC3
(PCINT12/SDA/ADC4)PC4
(PCINT13/SCL/ADC5)PC5
(PCINT14/RESET)PC6
(PCINT16/RXD)PD0
(PCINT17/TXD)PD1
(PCINT18/INT0)PD2
(PCINT19/OC2B/INT1)PD3
(PCINT20/XCK/T0)PD4
(PCINT21/OC0B/T1)PD5
(PCINT22/OC0A/AIN0)PD6
(PCINT23/AIN1)PD7
CE
CSN
MOSI
MISO
SCK
WDT_RST
NLOCK
RNG
RX
TX
IRQ
Y1
20MHz
22pF
C3
C4
22pF
R11
470Ω
LED
D1
RESET
10k
R2
VCC5V
PB1
RESET
Q1
2N3904
Q2
2N3904
4.7k
R5
R7
820k
R8
680k
0.1µF
C8
Q3
2N3904
R9
10k
R10
6.8k
VCC12V
RNG
GND
FDD_PRW
P3
VCC5V
GND
GND
VCC12V
nRF24L01+
P4
GND
VCC3.3V
CE
CSN
SCK
MOSI
MISO
IRQ
C11
10µF
GND
VCC12V
U3
ADM202EANZ
C1+
C1−
C2+
C2−
T1IN
T2IN
R1OUT
R2OUT
VCC
V+
GND
V−
T1OUT
T2OUT
R1IN
R2IN
C5
0.1µF
C6
0.1µF
C9
0.1µF
C10
0.1µF
VCC5V
GND
TX
RX
R3
1k
R4
1k
RS_RX
RS_TX
RS_DTR
R12
1k
Q4
2N7000
R6
1M
NLOCK
VCC5V
RESET
JP1
DTR
0.1µF
C7
DTR
ICSP
P1
MISO
SCK
RESET
VCC5V
MOSI
GND
RS232
P2
RS_DTR
RS_RX
GND
RS_TX
SWITCH
P5
RST_SW
MB_GND
RST_SW
MB_GND
FTDI
P7
GND
VCC5V
TX
RX
DTR
LM1117T-3.3
U1
IN
OUT
GND
VCC5V
VCC3.3V
C1
10µF(tant)
C2
10µF(tant)
WDT_RST
180Ω
R1
U2
PC817
RST_SW
MB_GND