Reactor-Separator Process

December 27, 2019

Contents

1 Dynamic Equations **1**

2 OCP Formulation **2**

3 Numerical Solutions **5**

1 Dynamic Equations

Consider the following three vessel, reactor-separator process consisting of two CSTRs and a flash separator as shown in Fig.1, this has been presented in Christofides et al. (2011). A feed stream to the first CSTR F_{10} contains the reactant A, which is converted into the desired product B. At the same time the reactant A can also react into an undesired side-product C. The solvent doesn't react and is labeled as D. The effluent of the first CSTR along with additional fresh feed F_{20} makes up the inlet to the second CSTR. The reactions $A \to B$ and $A \to C$ (referred to as 1 and 2, respectively) take place in the both CSTRs before the efflent from CSTR 2 is fed to a flash tank. The overhead vapor from the tank is condensed and recycled to the first CSTR and the bottom product stream is removed. All three vessels are assumed to have static holdup. The dynamic equations describing the behavior of the system, obtained through material and energy balances under standard modeling assumptions, are given below:

Reactor 1

$$\begin{aligned}\frac{\mathrm{d}T_1}{\mathrm{d}t} &= \frac{F_{10}}{V_1}(T_{10}-T_1) + \frac{F_r}{V_1}(T_3-T_1) + \frac{-\Delta H_1}{\rho C_p}k_1 e^{\frac{-E_1}{RT_1}}C_{A1} \\ &\quad + \frac{-\Delta H_2}{\rho C_p}k_2 e^{\frac{-E_2}{RT_1}}C_{A1} + \frac{Q_1}{\rho C_p V_1}\end{aligned} \tag{1}$$

$$\begin{aligned}\frac{\mathrm{d}C_{A1}}{\mathrm{d}t} &= \frac{F_{10}}{V_1}(C_{A10}-C_{A1}) + \frac{F_r}{V_1}(C_{Ar}-C_{A1}) \\ &\quad - k_1 e^{\frac{-E_1}{RT_1}}C_{A1} - k_2 e^{\frac{-E_2}{RT_1}}C_{A1}\end{aligned} \tag{2}$$

$$\frac{\mathrm{d}C_{B1}}{\mathrm{d}t} = \frac{-F_{10}}{V_1}C_{B1} + \frac{F_r}{V_1}(C_{Br}-C_{B1}) + k_1 e^{\frac{-E_1}{RT_1}}C_{A1} \tag{3}$$

$$\frac{\mathrm{d}C_{C1}}{\mathrm{d}t} = \frac{-F_{10}}{V_1}C_{C1} + \frac{F_r}{V_1}(C_{Cr}-C_{C1}) + k_2 e^{\frac{-E_2}{RT_1}}C_{A1} \tag{4}$$

Reactor 2

$$\begin{aligned}\frac{\mathrm{d}T_2}{\mathrm{d}t} &= \frac{F_1}{V_2}(T_1 - T_2) + \frac{F_{20}}{V_2}(T_{20} - T_2) + \frac{-\Delta H_1}{\rho C_p} k_1 e^{\frac{-E_1}{RT_2}} C_{A2} \\ &+ \frac{-\Delta H_2}{\rho C_p} k_2 e^{\frac{-E_2}{RT_2}} C_{A2} + \frac{Q_2}{\rho C_p V_2}\end{aligned} \tag{5}$$

$$\begin{aligned}\frac{\mathrm{d}C_{A2}}{\mathrm{d}t} &= \frac{F_1}{V_2}(C_{A1} - C_{A2}) + \frac{F_{20}}{V_2}(C_{A20} - C_{A2}) \\ &- k_1 e^{\frac{-E_1}{RT_2}} C_{A2} - k_2 e^{\frac{-E_2}{RT_2}} C_{A2}\end{aligned} \tag{6}$$

$$\frac{\mathrm{d}C_{B2}}{\mathrm{d}t} = \frac{F_1}{V_2}(C_{B1} - C_{B2}) - \frac{F_{20}}{V_2} C_{B2} + k_1 e^{\frac{-E_1}{RT_2}} C_{A2} \tag{7}$$

$$\frac{\mathrm{d}C_{C2}}{\mathrm{d}t} = \frac{F_1}{V_2}(C_{C1} - C_{C2}) - \frac{F_{20}}{V_2} C_{C2} + k_2 e^{\frac{-E_2}{RT_2}} C_{A2} \tag{8}$$

Separator

$$\frac{\mathrm{d}T_3}{\mathrm{d}t} = \frac{F_2}{V_3}(T_2 - T_3) - \frac{H_{vap} F_r}{\rho C_p V_3} + \frac{Q_3}{\rho C_p V_3} \tag{9}$$

$$\frac{\mathrm{d}C_{A3}}{\mathrm{d}t} = \frac{F_2}{V_3}(C_{A2} - C_{A3}) - \frac{F_r}{V_3}(C_{Ar} - C_{A3}) \tag{10}$$

$$\frac{\mathrm{d}C_{B3}}{\mathrm{d}t} = \frac{F_2}{V_3}(C_{B2} - C_{B3}) - \frac{F_r}{V_3}(C_{Br} - C_{B3}) \tag{11}$$

$$\frac{\mathrm{d}C_{C3}}{\mathrm{d}t} = \frac{F_2}{V_3}(C_{C2} - C_{C3}) - \frac{F_r}{V_3}(C_{Cr} - C_{C3}) \tag{12}$$

where it has been assumed that all units have constant hold up and all species have constant relative volatility within the operating temperature range of the flash tank (Tippett & Bao (2013)). The following relations model the composition of the overhead stream relative to the composition of the liquid holdup in the flash tank:

$$C_{Ar} = \frac{\alpha_A C_{A3}}{K} \tag{13}$$

$$C_{Br} = \frac{\alpha_B C_{B3}}{K} \tag{14}$$

$$C_{Cr} = \frac{\alpha_C C_{C3}}{K} \tag{15}$$

where

$$K = \alpha_A C_{A3} \frac{MW_A}{\rho} + \alpha_B C_{B3} \frac{MW_B}{\rho} + \alpha_C C_{C3} \frac{MW_C}{\rho} + \alpha_D x_D \rho \tag{16}$$

and x_D is the mass fraction of the solvent in the flash tank liquid holdup and is found from a mass balance. The definitions for the variables used in Eqs. 1-16 are shown in Table 1, with parameter values given in Table 2.

2 OCP Formulation

The aim of the OCP is to stabilize the 12 states to the equilibrium from an initial point and the manipulated variables are the heat supplied into the three

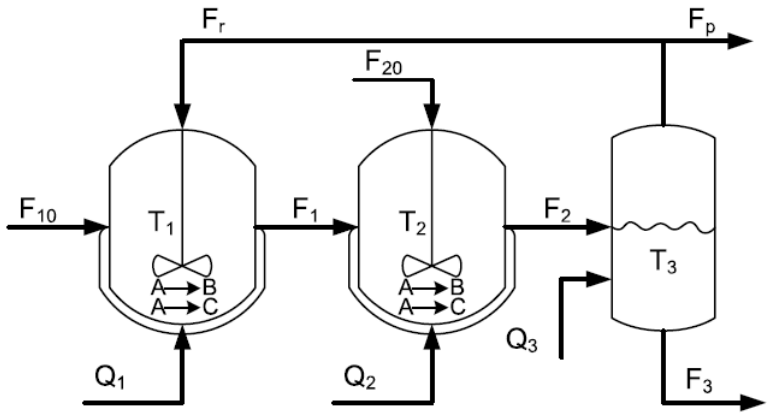

Figure 1: Reactor-separator process

Table 1: Process variables of the reactor-separator process

Variables	Definition
C_{A1}, C_{A2}, C_{A3}	Concentration of A in vessels 1, 2, 3
C_{B1}, C_{B2}, C_{B3}	Concentration of B in vessels 1, 2, 3
C_{C1}, C_{C2}, C_{C3}	Concentration of C in vessels 1, 2, 3
C_{Ar}, C_{Br}, C_{Cr}	Concentration of A, B, C in the recycle
T_1, T_2, T_3	Temperatures in vessels 1, 2, 3
T_{10}, T_{20}	Feed stream temperatures to vessel 1, 2
F_1, F_2, F_3	Effluent flow rates from vessel 1, 2, 3
F_{10}, F_{20}	Feed stream flow rates to vessel 1, 2
C_{A10}, C_{A20}	Concentrations if A in the feed stream to vessels 1, 2
F_r	Recycle flow rate
V_1, V_2, V_3	Volumes of vessels 1, 2, 3
E_1, E_2	Activation energy for reactions 1, 2
k_1, k_2	Pre-exponential values for reactions 1, 2
ΔH_1, ΔH_2	Heats of reaction for reactions 1, 2
H_{vap}	Heat of vaporization
α_A, α_B, α_C, α_D	Relative volatilities of A, B, C, D
MW_A, MW_B, MW_C	Molecular weights of A, B and C
Q_1, Q_2, Q_3	Heat inputs into vessel 1, 2, 3
C_p, R, ρ	Heat capacity, gas constant and solution density

Table 2: Process parameters of the reactor-separator process

Parameters	Values	Units	Parameters	Values	Units
T_{10}	300	K	T_{20}	300	K
F_{10}	5	m^3/h	F_{10}	5	m^3/h
F_r	1.9	m^3/h	C_{A10}	4	$kmol/m^3$
C_{A20}	3	$kmol/m^3$	V_1	1.0	m^3
V_2	0.5	mm^3	V_3	1.0	m^3
E_1	5×10^4	KJ/kmol	E_2	5.5×10^4	KJ/kmol
k_1	3×10^6	h^{-1}	k_2	3×10^6	h^{-1}
ΔH_1	-5×10^4	KJ/kmol	ΔH_2	-5.3×10^4	KJ/kmol
H_{vap}	5	KJ/kmol	C_p	0.231	KJ/kgK
R	8.314	KJ/kmolK	ρ	1000	kg/m^3
α_A	2	-	α_B	1	-
α_C	1.5	-	α_D	3	-
MW_A	50	kg/kmol	MW_B	50	kg/kmol
MW_C	50	kg/kmol			

units, ie. $Q_i, i = 1, 2, 3$ (Cai et al. (2014)).

The sampling time is $h = 0.01h$ and the control horizon is $N = 10$.The system of Eqs. 1-16 is numerically simulated using a Runge-Kutta integration method. In this simulation, the equilibrium point selected and the corresponding equilibrium inputs are shown in Table 3 and 4.

The external heat inputs associated with each vessel is the control input associated with each subsystems, that is, $u_1 = Q_1 - Q_{1s}$, $u_2 = Q_2 - Q_{2s}$ and $u_3 = Q_3 - Q_{3s}$. The inputs are subjected to constraints as follows:

$$|u_1| \leq 5 \times 10^4 \text{ KJ/h} \tag{17}$$

$$|u_2| \leq 1.5 \times 10^5 \text{ KJ/h} \tag{18}$$

$$|u_3| \leq 2 \times 10^5 \text{ KJ/h} \tag{19}$$

The objective function is:

$$J(\mathbf{x}, \mathbf{u}) = \sum_{i=1}^{N} \mathbf{x}(i)^T \mathbf{Q_x} \mathbf{x}(i) + \sum_{i=0}^{N-1} \mathbf{u}(i)^T \mathbf{R_u} \mathbf{u}(i) \tag{20}$$

The weighting matrices are selected as:

$$\mathbf{Q_x} = \text{diag}([20, 10^3, 10^3, 10^3, 20, 10^3, 10^3, 10^3, 20, 10^3, 10^3, 10^3]) \tag{21}$$

$$\mathbf{R_u} = \text{diag}([0, 0, 0]) \tag{22}$$

The initial condition which is utilized to carry out simulations is as follows:

$$\mathbf{x}(0)^T = [360.69, 3.19, 0.15, 0.03, 430.91, 2.76, 0.34, 0.08, 430.42, 2.79, 0.38, 0.08] \tag{23}$$

Table 3: Steady-state values for x_s of the reactor-separator process

States	Values	Units	States	Values	Units
C_{A1s}	3.31	kmol/m^3	C_{A2s}	2.75	kmol/m^3
C_{A3s}	2.88	kmol/m^3	C_{B1s}	0.17	kmol/m^3
C_{B2s}	0.45	kmol/m^3	C_{B3s}	0.50	kmol/m^3
C_{C1s}	0.04	kmol/m^3	C_{C2s}	0.11	kmol/m^3
C_{C3s}	0.12	kmol/m^3	T_{1s}	369.53	k
T_{2s}	435.25	k	T_{3s}	435.25	k

Table 4: Steady-state values for $Q_{is}, i = 1, 2, 3$ of the reactor-separator process

Inputs	Values	Units	Inputs	Values	Units
Q_{1s}	0	KJ/h	Q_{2s}	0	KJ/h
Q_{3s}	0	KJ/h			

3 Numerical Solutions

The states $\mathbf{x}(i)$ and inputs $\mathbf{u}(i)$ are variables for the objective function $J(\mathbf{x}, \mathbf{u})$. While compared with the states $\mathbf{x}(i)$, the value of inputs $\mathbf{u}(i)$ are too large, so the solver might return some unreasonable or infeasible solutions if Eqs. 1-16 are directly used in the algorithm. Thus, in order to get a reasonable solution, the inputs $\mathbf{u}(i)$ should be scaled and as a result, Eqs. 1-16 will also be transformed at the same time.

3.1 Centralized Solution

Fig.3 shows the temperature, concentration and input trajectories of the reactor-separator process under centralized formulation. The solution seems like a Bang-bang controller and with respect to the objective function, this solution seems reasonable.

3.2 Distributed Solution

Fig.**??** shows the state and input trajectories of the reactor-separator process under distributed formulation while using the ALADIN algorithm. The distributed solution is exactly the same as the centralized soltion.

References

Cai, X., Tippett, M. J., Xie, L. & Bao, J. (2014), 'Fast distributed mpc based on active set method', *Computers & Chemical Engineering* **71**, 158–170.

Christofides, P. D., Liu, J. & De La Pena, D. M. (2011), *Networked and distributed predictive control: Methods and nonlinear process network applications*, Springer Science & Business Media.

Tippett, M. J. & Bao, J. (2013), 'Distributed model predictive control based on dissipativity', *AIChE Journal* **59**(3), 787–804.

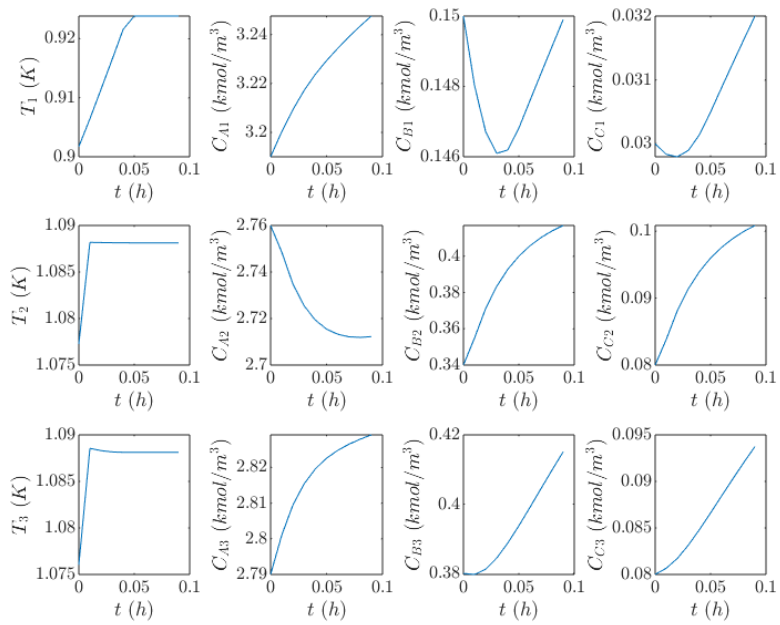

(a) State trajectories

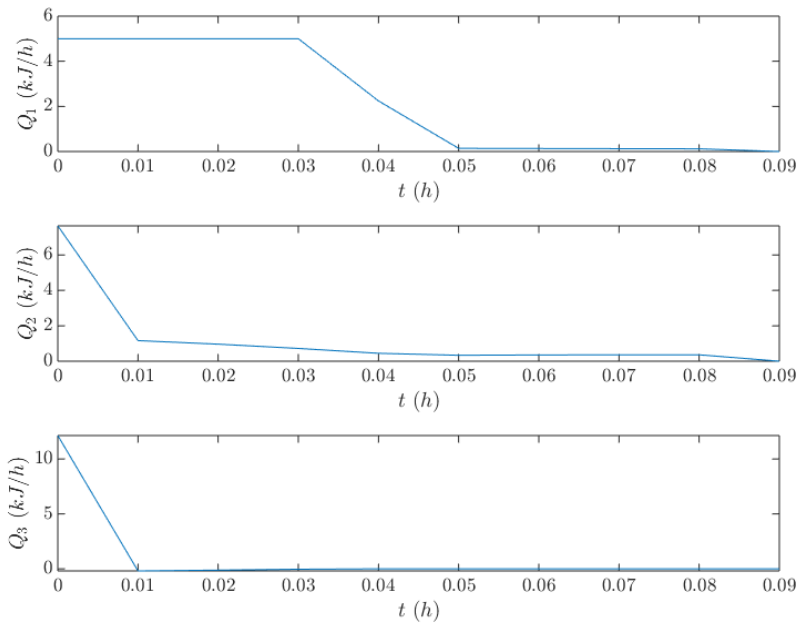

(b) Input trajectories

Figure 2: State and input trajectories under centralized formulation

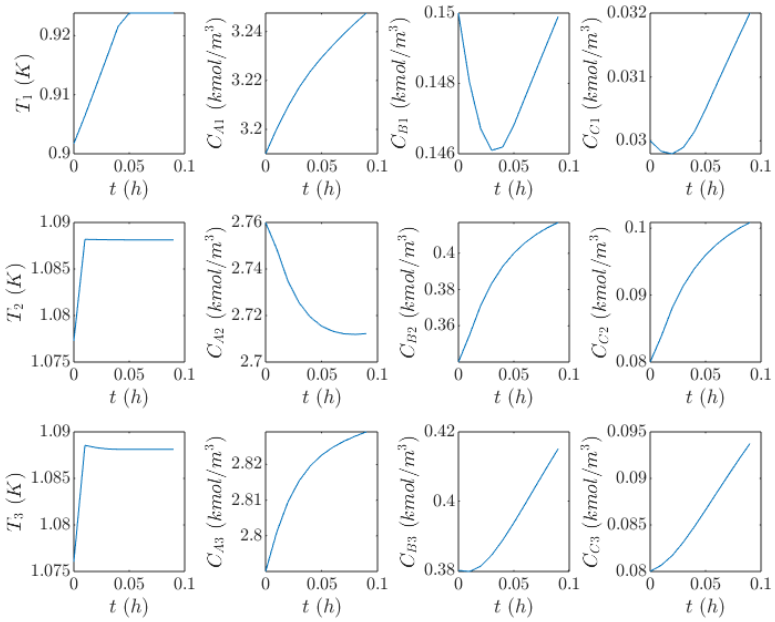

(a) State trajectories

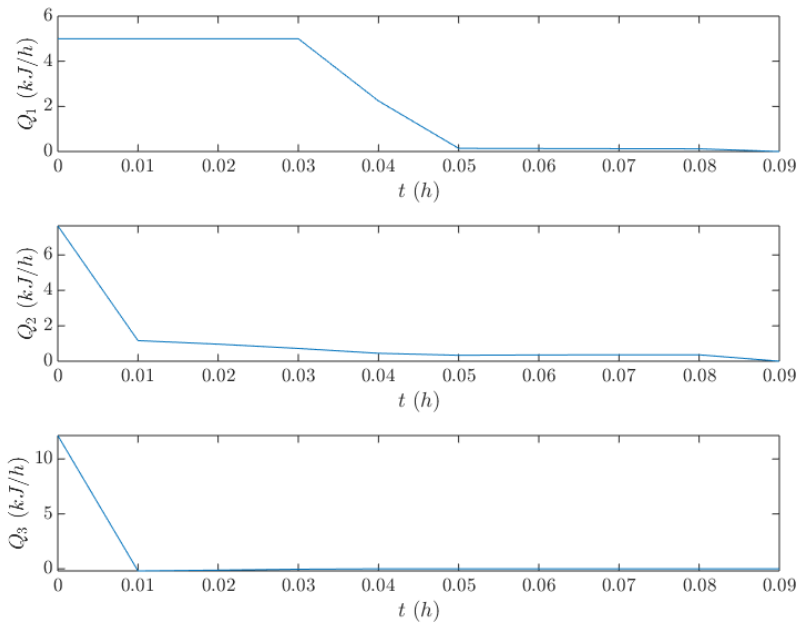

(b) Input trajectories

Figure 3: State and input trajectories under distributed formulation