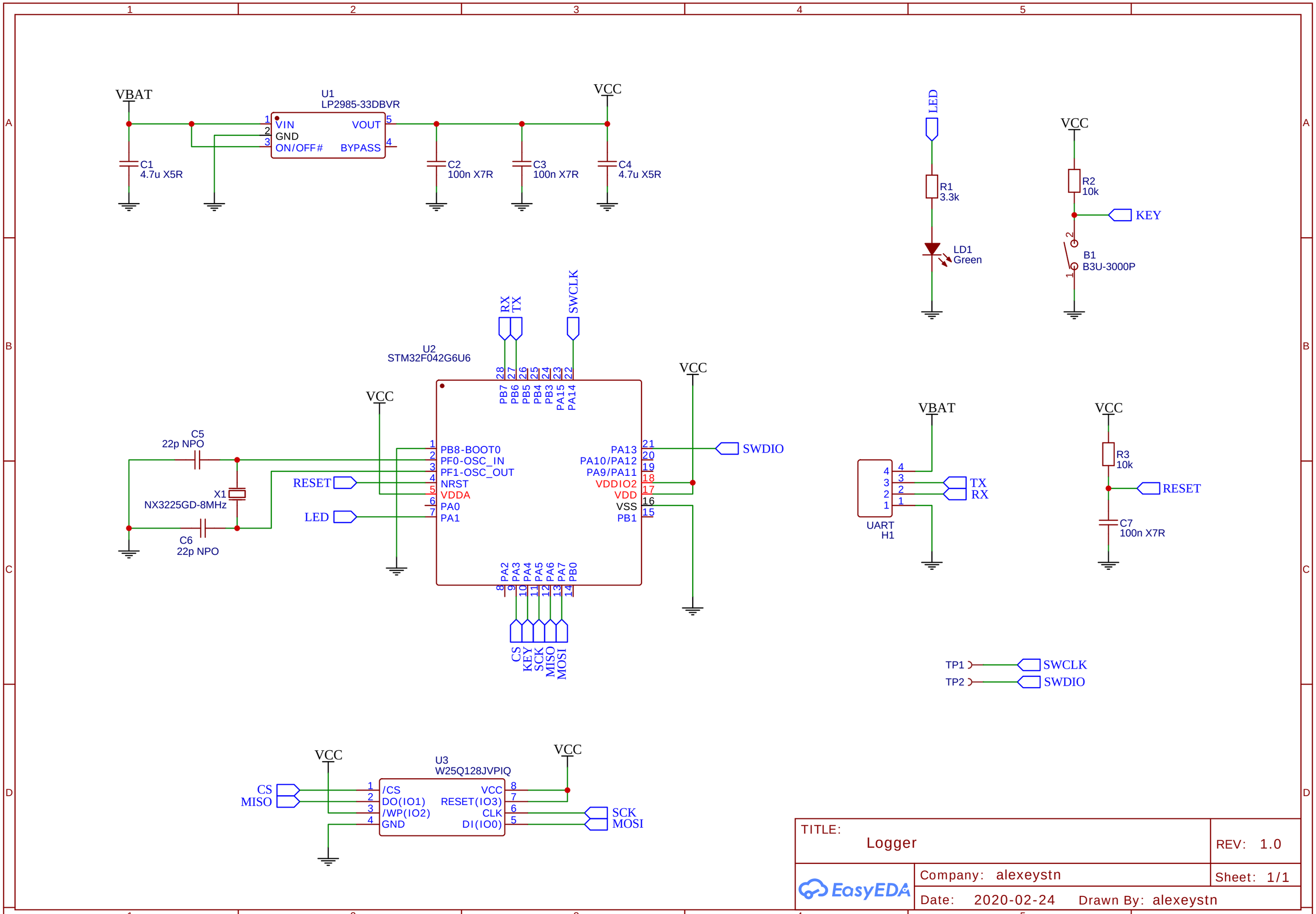
VBAT
U1
LP2985-33DBVR
VIN
GND
ON/OFF#
VOUT
BYPASS
C1
4.7u X5R
C2
100n X7R
C3
100n X7R
C4
4.7u X5R
VCC
LED
R1
3.3k
LD1
Green
R2
10k
KEY
B1
B3U-3000P
RX
TX
SWCLK
U2
STM32F042G6U6
PB7
PB6
PB5
PB4
PB3
PA15
PA14
PB8-BOOT0
PF0-OSC_IN
PF1-OSC_OUT
NRST
VDDA
PA0
PA1
PA13
PA10/PA12
PA9/PA11
VDDIO2
VDD
VSS
PB1
SWDIO
C5
22p NPO
X1
NX3225GD-8MHz
C6
22p NPO
RESET
LED
PA2
PA3
PA4
PA5
PA6
PA7
PB0
CS
KEY
SCK
MISO
MOSI
UART
H1
TX
RX
R3
10k
C7
100n X7R
TP1
TP2
U3
W25Q128JVPIQ
/CS
DO(IO1)
/WP(IO2)
GND
VCC
RESET(IO3)
CLK
DI(IO0)
SCK
MOSI
TITLE:
Logger
REV: 1.0
Company: alexeystn
Sheet: 1/1
Date: 2020-02-24
Drawn By: alexeystn
EasyEDA