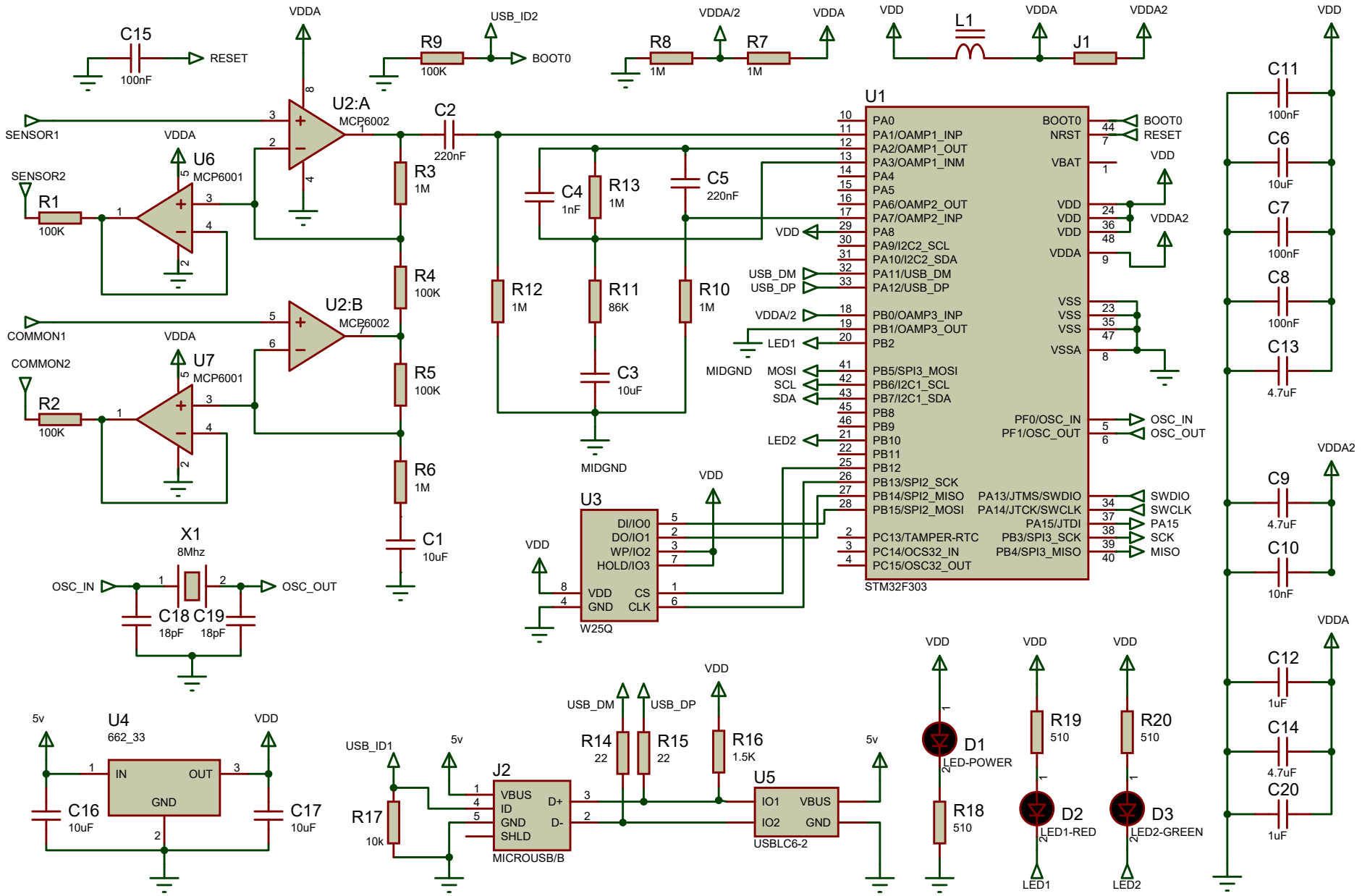Cortex Band "A" (Sensor)