ENSEA
Beyond Engineering

Power Electronics

alexis.martin@ensea.fr
Desk D216

Layout

- Non isolated choppers
- **Switch mode power supplies**
  - Introduction
  - Flyback
  - Forward
  - Push-Pull
- Power components

ENSEA
Beyond Engineering

Introduction

Linear isolated power supply principle

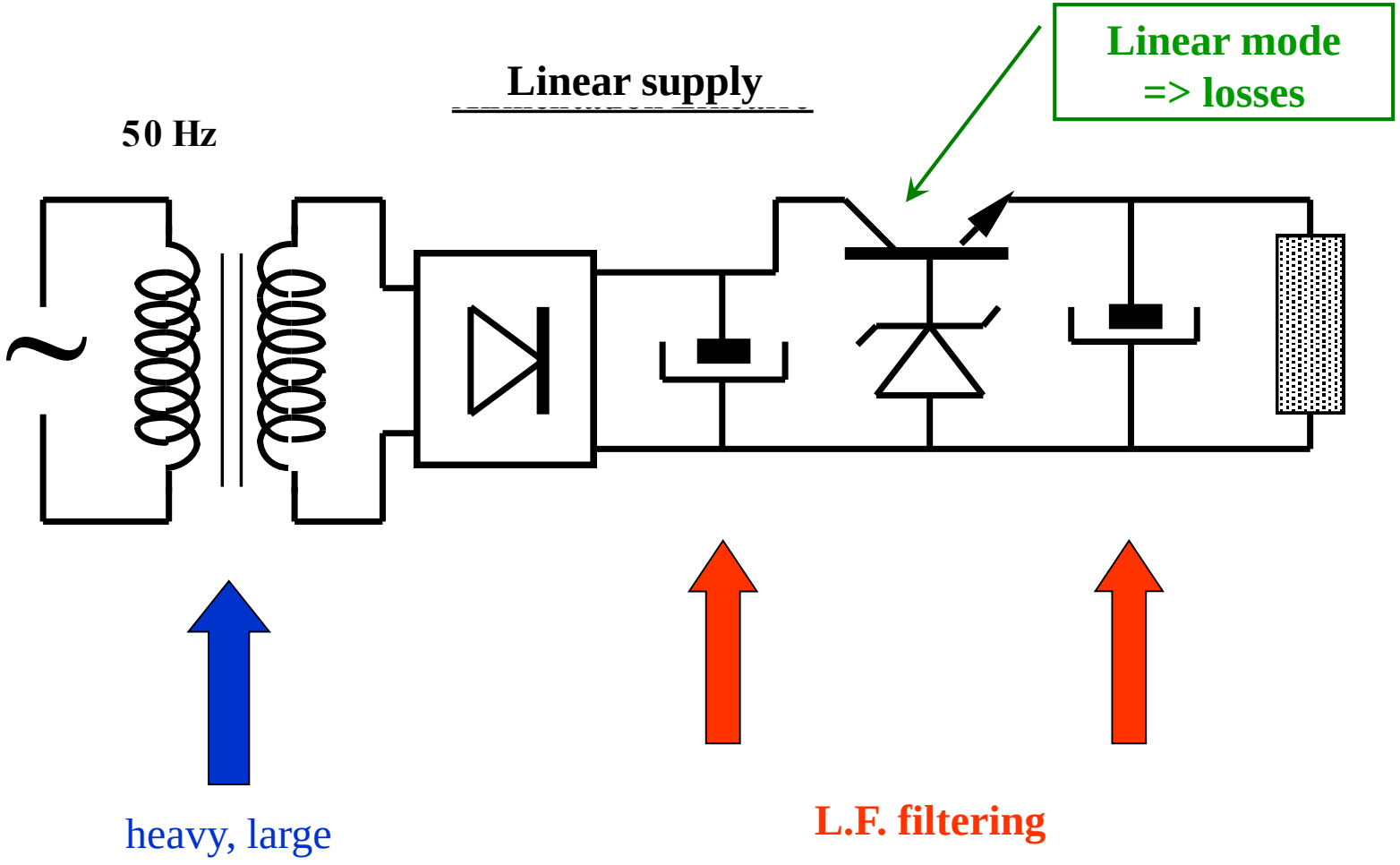

Isolated switched-mode power supply principle

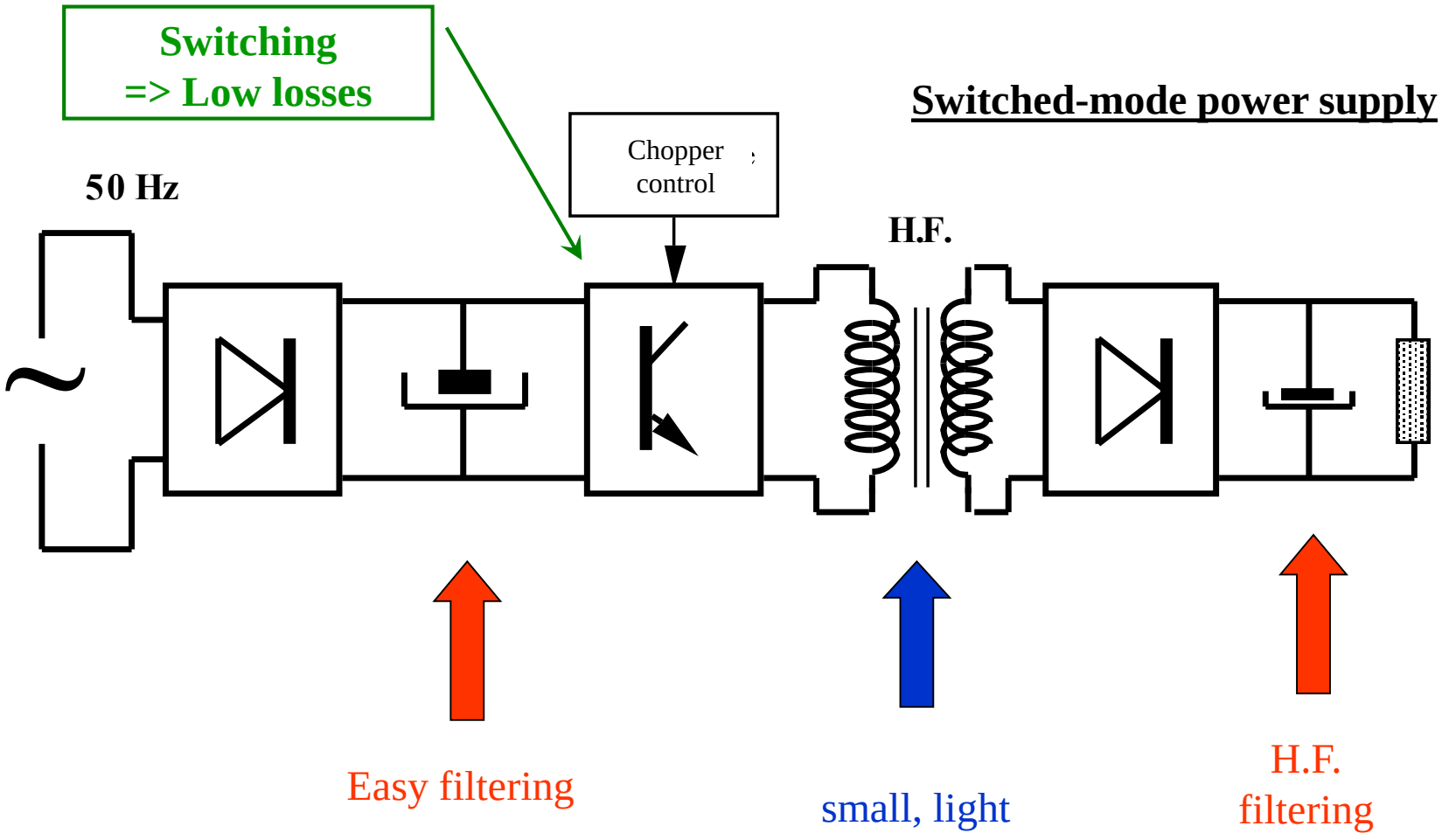

Comparison

Element	LINEAR	Switching
Transformer	Large (50 Hz)	Small (H.F.)
Transistor	Linear (losses)	Switching
Output filter	Large (50 Hz)	Simple (H.F.)
Command	autonomous, simple	control, complex
Efficiency	40 % < < 50 %	70 % < < 90 %
Control	0,1 %	0,5 %

Switched-mode power supply nomenclature

- ***Flyback*** ***: energy storage converter***
- ***Forward*** ***: direct converter***
- ***Push-Pull*** ***: symmetric converter (full bridge or half bridge)***

Flyback principle

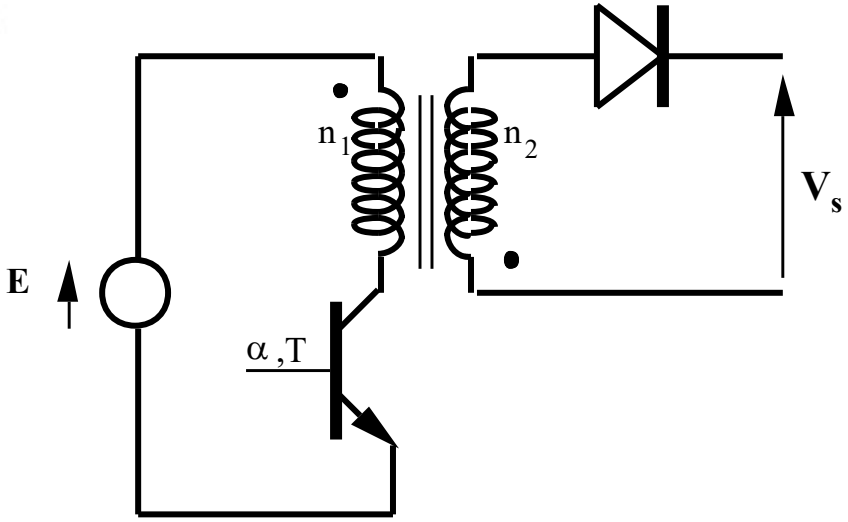

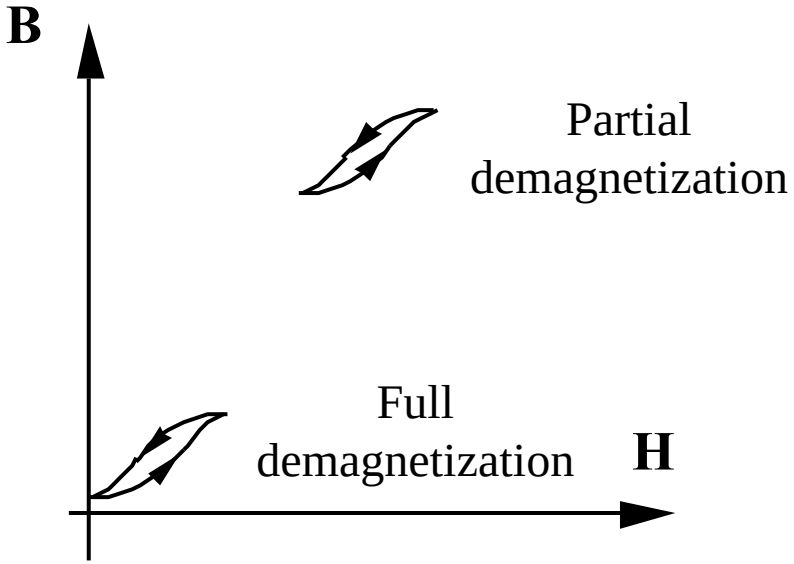

Easiness, low power, few components

Forward principle

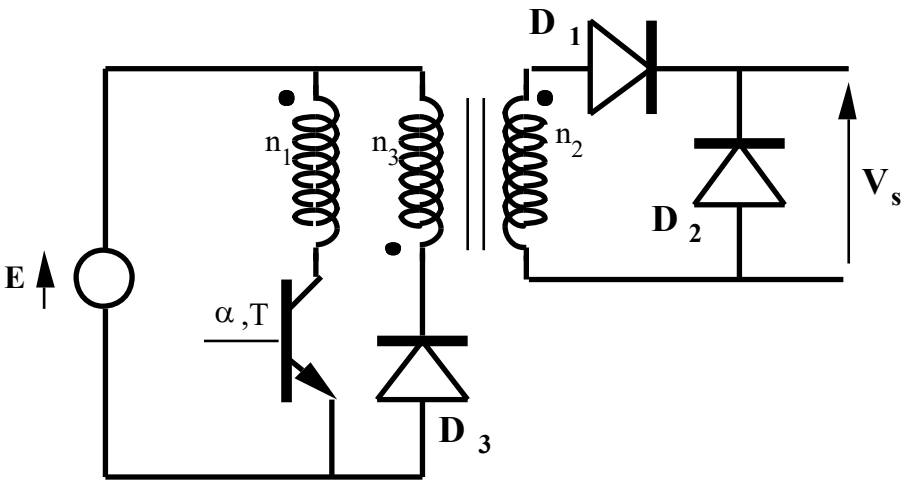

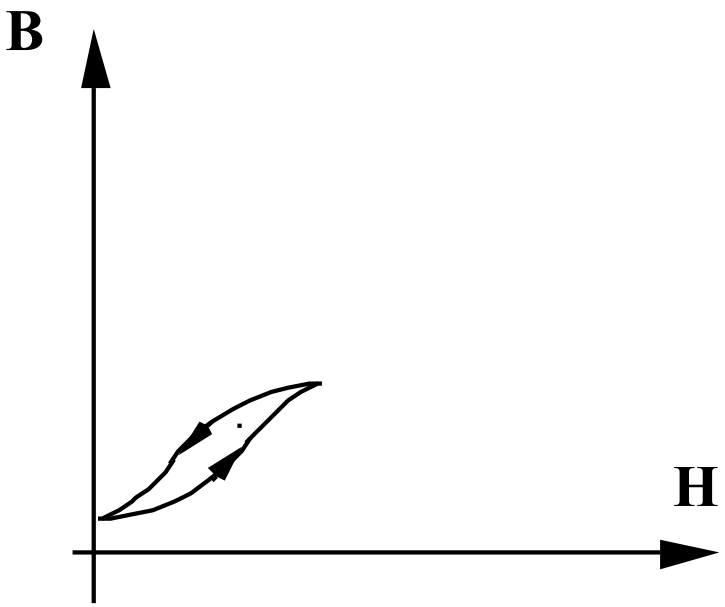

Magnetic component optimized, more components

Symmetric converter

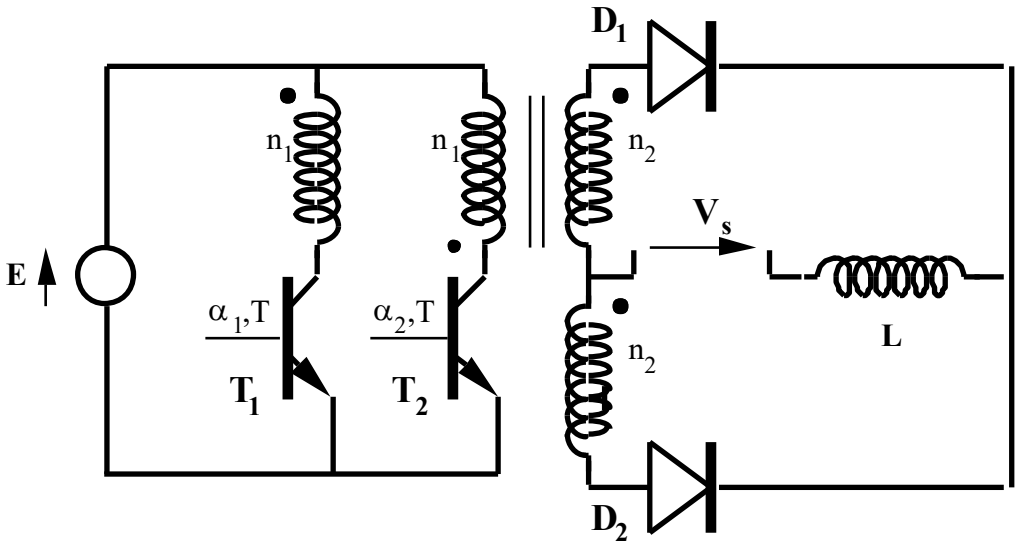

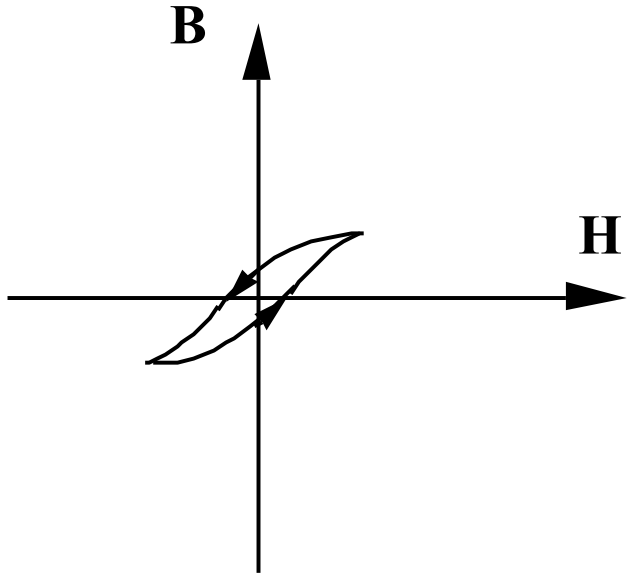

High power, 2 transistors or more

Flyback

FLYBACK converter study

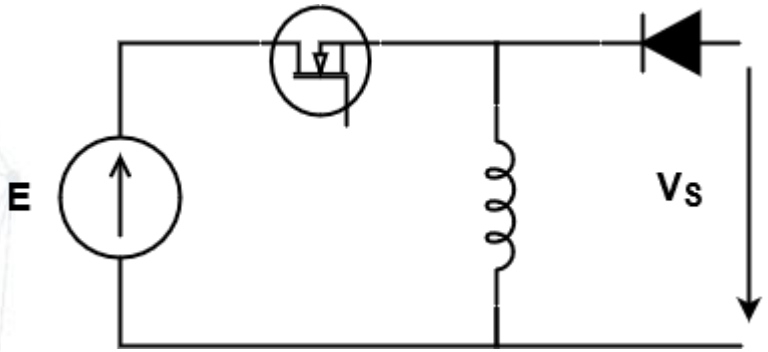

≡

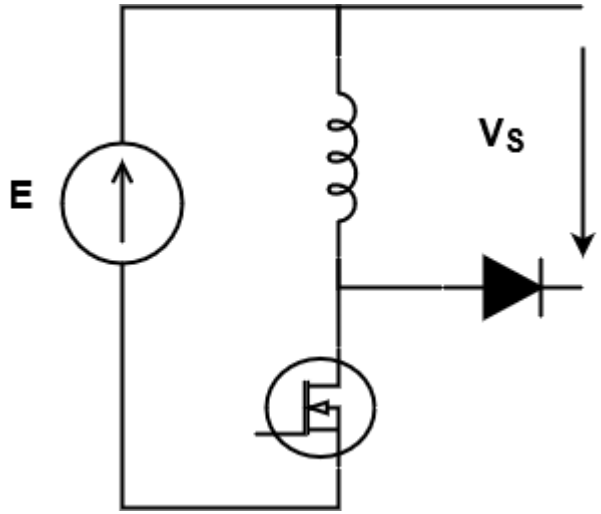

Buck - Boost

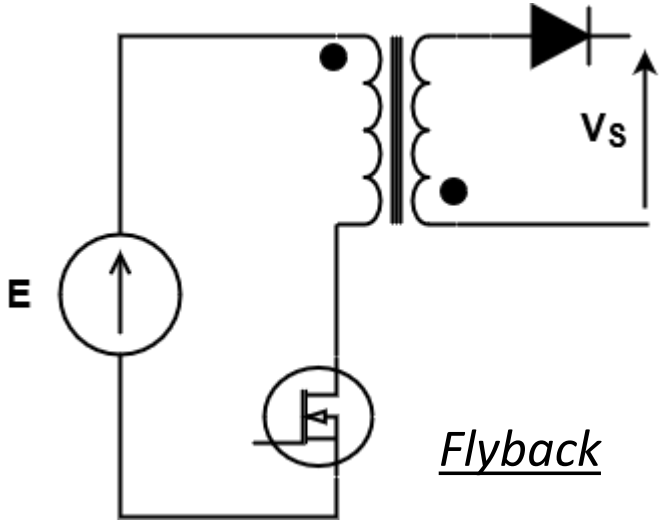

≡

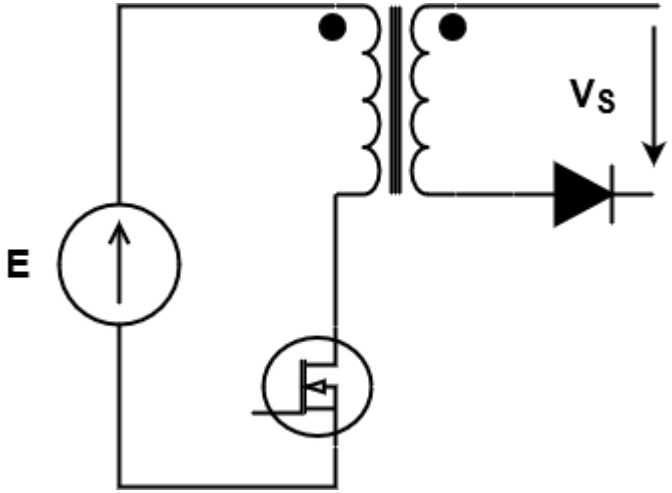

Flyback

FLYBACK converter study

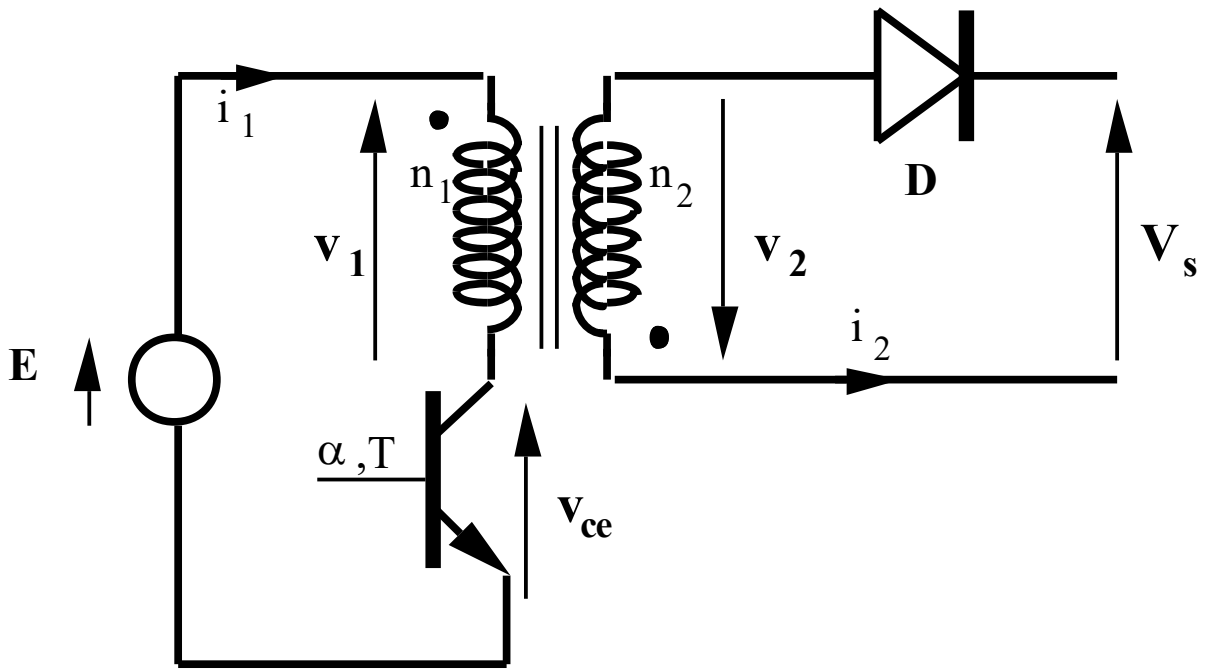

Hypothesis ***: E constant, V_s constant, perfect semi-conductors***

2 magnetic modes
Partial demagnetization (continuous mode)
Full demagnetization (discontinuous mode)

Transformer model: convention !

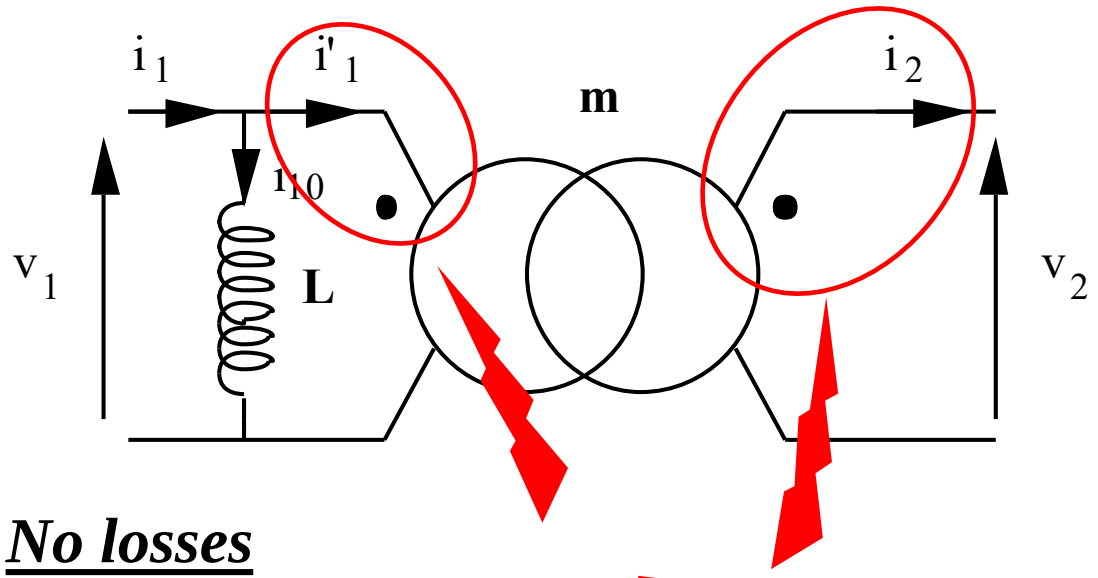

No losses

L : magnetizing inductance (at the primary)

R: Reluctance of the magnetic circuit

$$m = \frac{n_2}{n_1} = \frac{v_2}{v_1} = \frac{i_1{}'}{i_2}$$

$$\oint H.dl = R.\varphi = n_1.i_1 - n_2.i_2 = n_1.i_{10}$$

Hopkinson's law

Transformer model: convention !

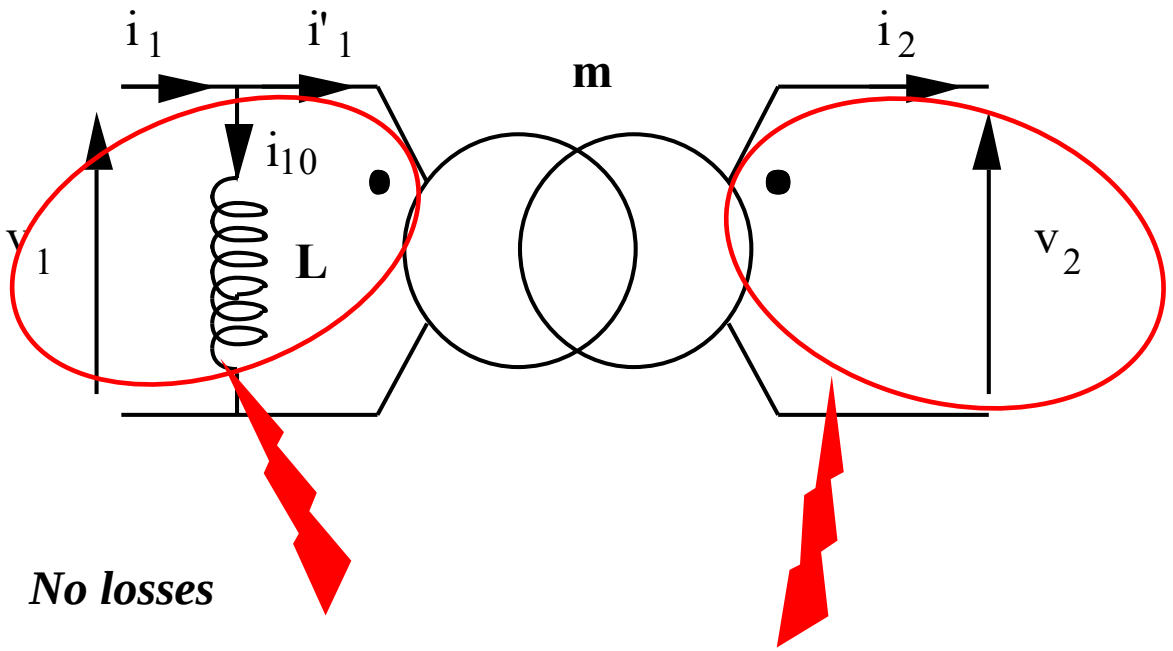

$$v_1 = +n_1 \frac{d\varphi}{dt} \qquad v_2 = +n_2 \frac{d\varphi}{dt}$$

FLYBACK transformer model

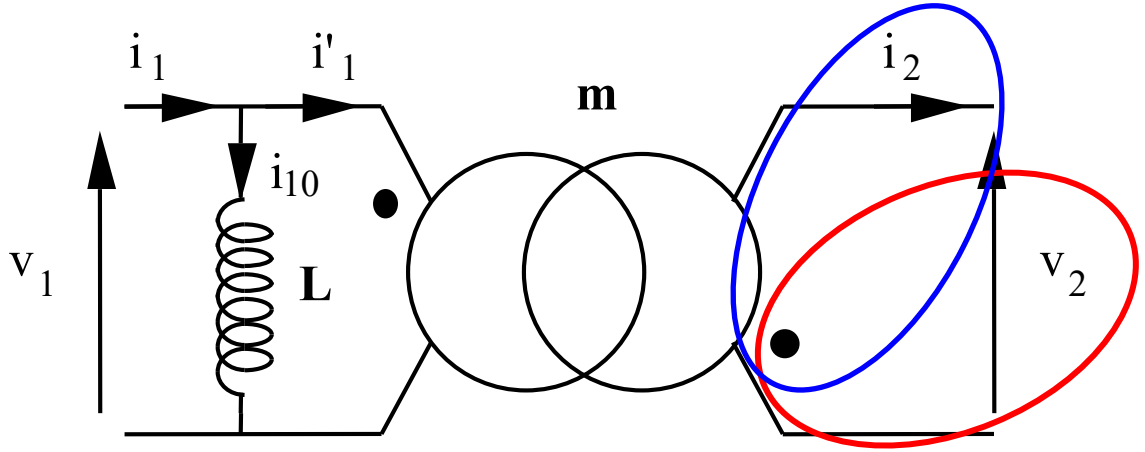

$$m=\frac{N_2}{N_1}=-\frac{v_2}{v_1}=-\frac{i'_1}{i_2}$$

$$v_2=-n_2\frac{d\varphi}{dt}$$

$$\oint H.dl=R.\varphi=n_1.i_1+n_2.i_2=n_1.i_{10}$$

Magnetizing current

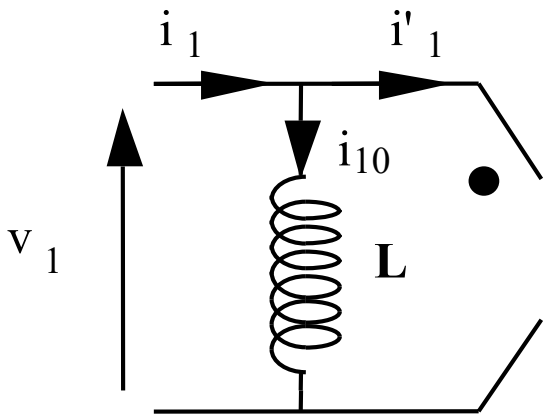

$$i_1 = i_{10} + i'_1$$

$$R.\varphi = n_1.i_{10} \qquad L_1 = \frac{n_1^2}{R}$$

Magnetizing current ⇔ flux in the magnetic circuit

FLYBACK equivalent scheme

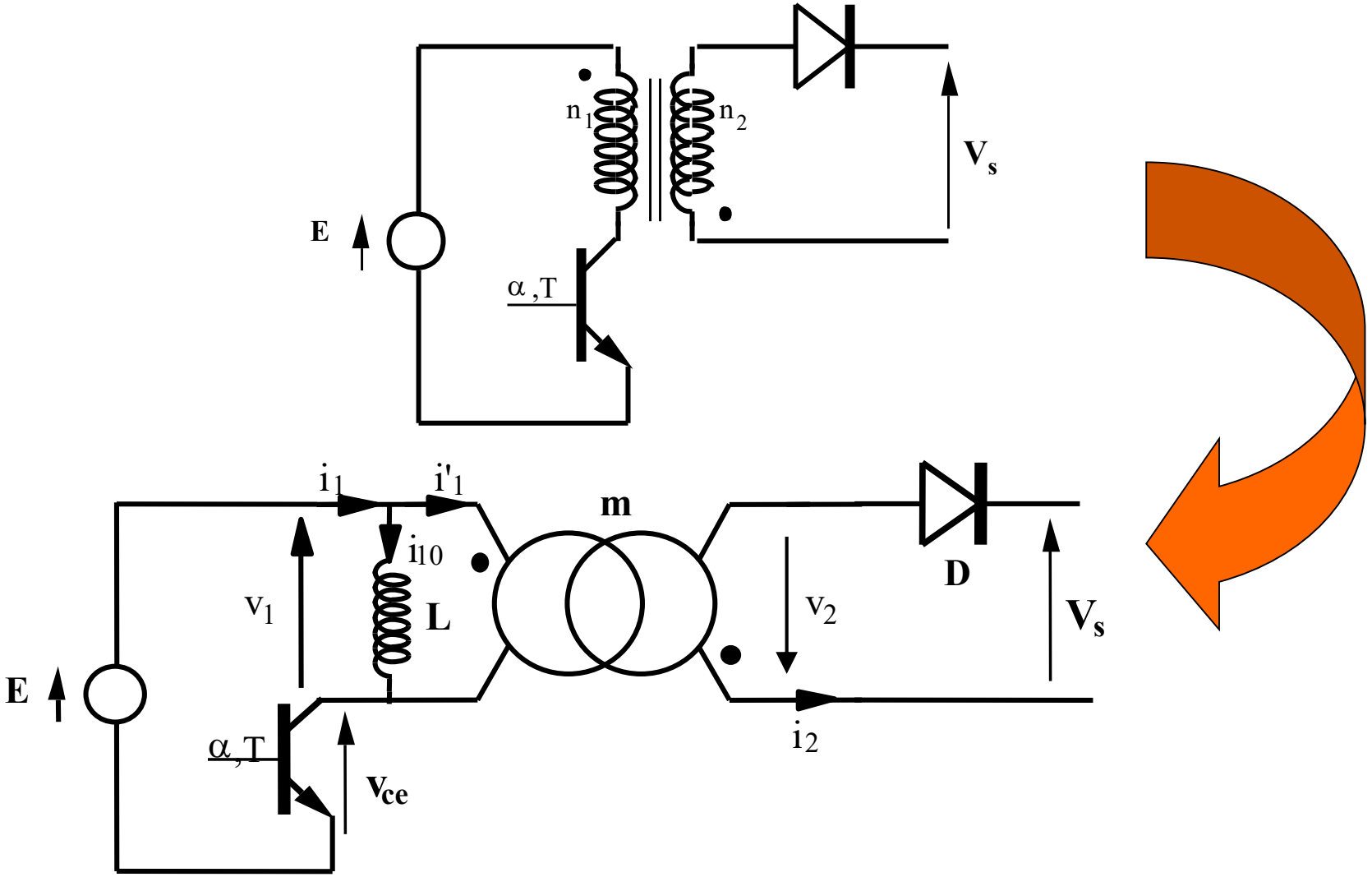

Partial demagnetization mode: continuous conduction

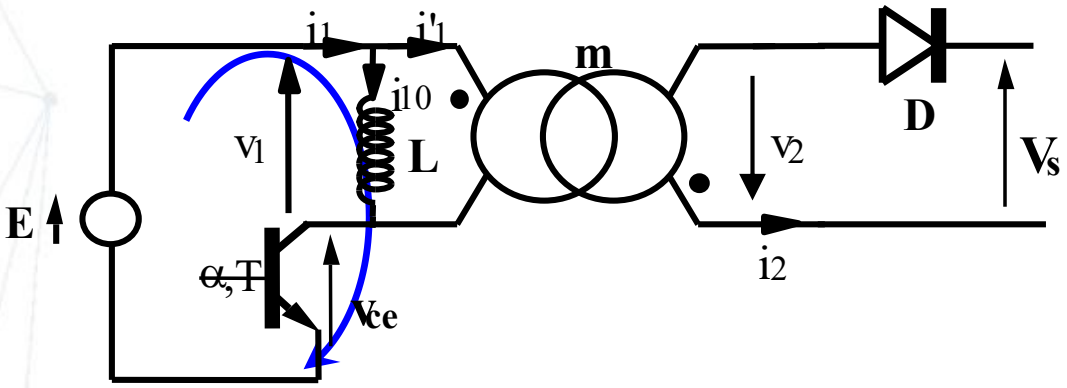

$0 < t < \alpha T$: T_p closed
=> $v_1 = E$ => $v_2 = m.E$
$v_D = -mE - V_s < 0$ => *D reverse*

$i_2 = 0$ => $i'_1 = 0$ => $i_1 = i_{10}$
Energy storing

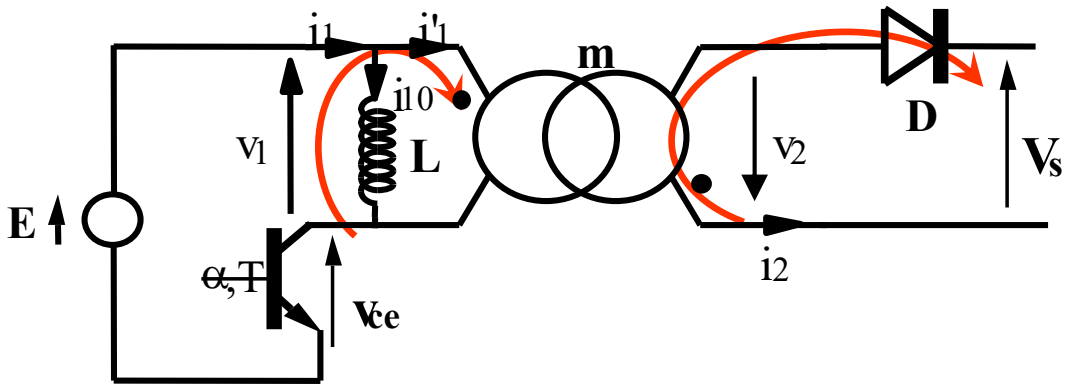

$\alpha T < t < T$: T_p opened
=> $i_1 = 0$ => $i'_1 = -i_{10} < 0$
=> $i_2 < 0$ => *D forward*

$v_2 = -V_S$ => $v_1 = -V_S/m$ => φ decreases
Energy restitution

$$\oint H.dl = R.\varphi = n_1.i_1 - n_2.i_2 = n_1.i_{10}$$

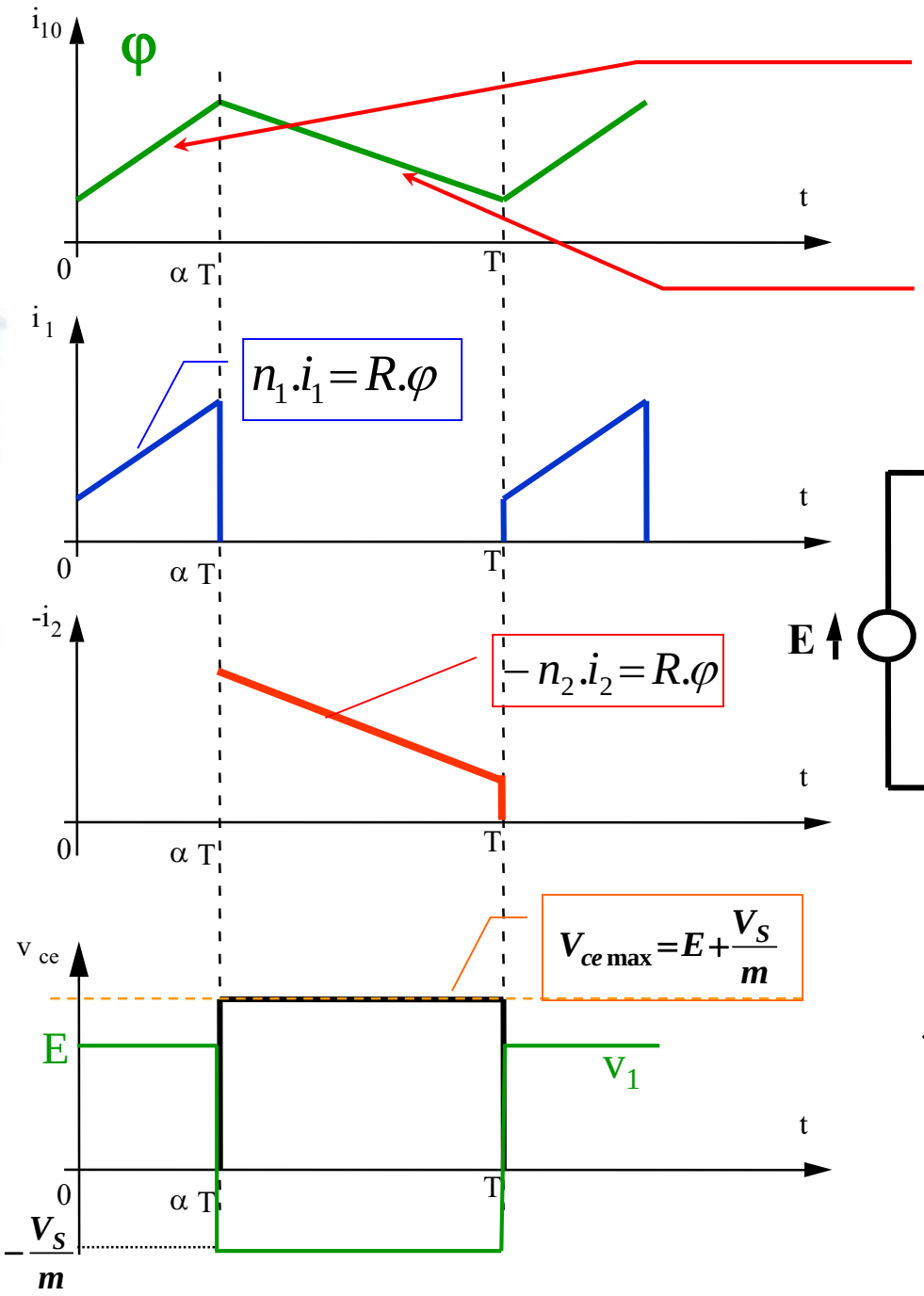

$$v_1 = L_1.\frac{di_{10}}{dt} = n_1.\frac{d\varphi}{dt} \qquad \frac{d\varphi}{dt} = \frac{E}{n_1}$$

$$v_2 = n_2.\frac{d\varphi}{dt} \qquad \frac{d\varphi}{dt} = -\frac{V_S}{n_2}$$

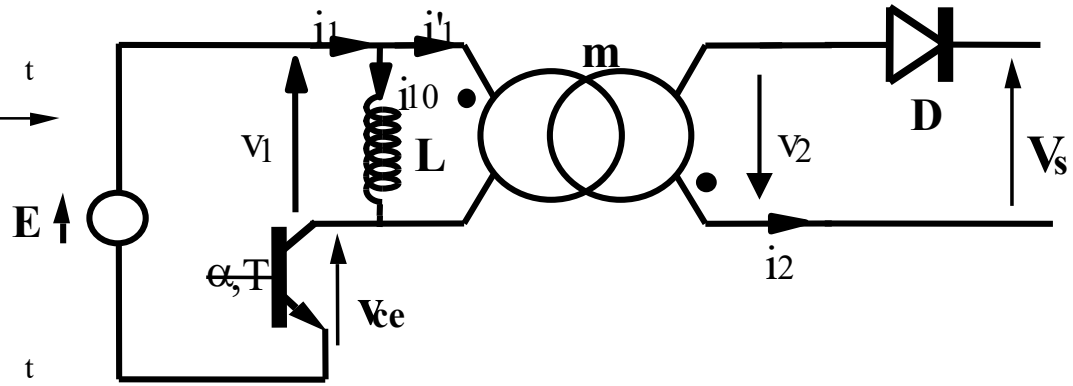

Output voltage calculation

$$< v_1 > = 0 \qquad < v_1 > = \frac{1}{T}.\left[E.\alpha T + \left(-\frac{V_S}{m}\right).(T - \alpha.T)\right]$$

$$V_S = \frac{\alpha}{1-\alpha}.mE$$

Demagnetization issue

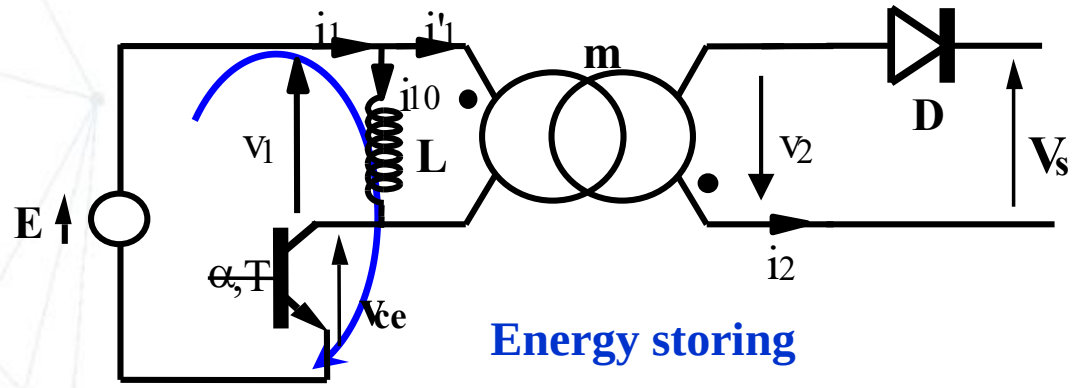

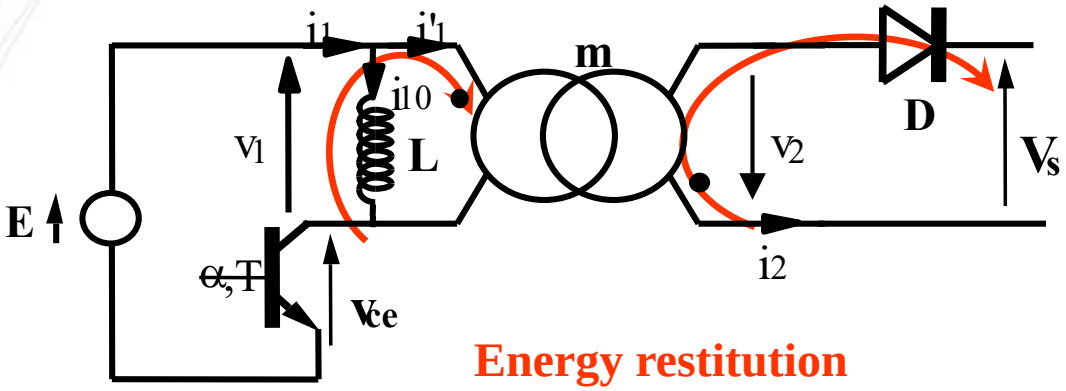

Warning:

If no load connected
-> Output capacitor never discharges
-> Issue

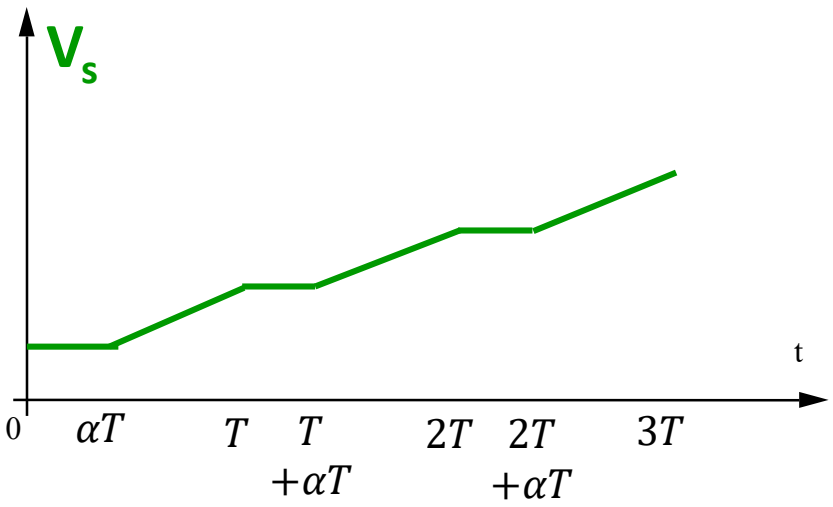

Discontinuous mode: behavior

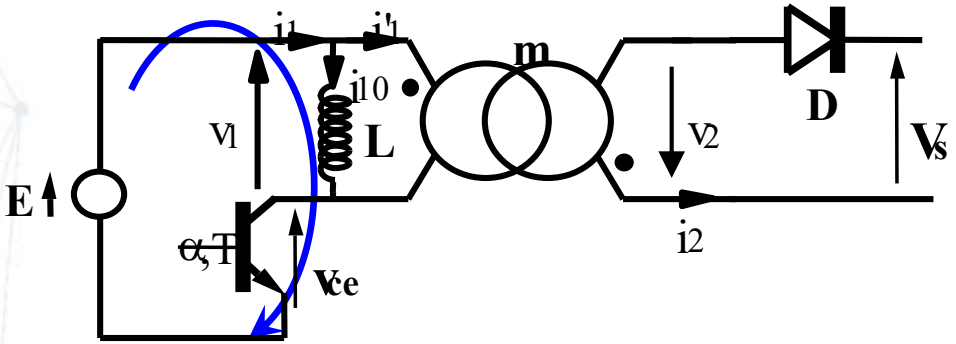

$0 < t < \alpha T$: T_p closed
=> $v_1 = E$ => $v_2 = m.E$
$v_D < 0$ => *D reverse*
$i_2 = 0$ => $i'_1 = 0$ => $i_1 = i_{10}$
Energy stoking
Unchanged mode

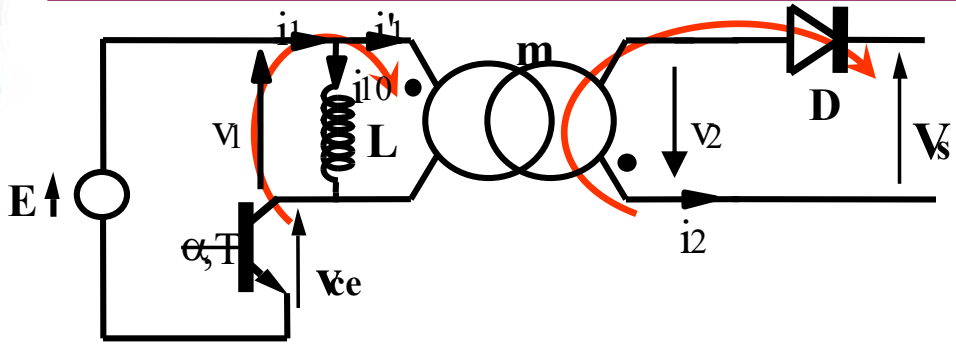

$\alpha T < t < \alpha' T$: T_p opened
=> $i_1 = 0$ => $i'_1 = - i_{10} < 0$
=> $i_2 < 0$ => *D forward*
and then reverse naturally

$v_2 = -V_S$ => $v_1 = - V_S/m$ => φ decreases
Energy restitution

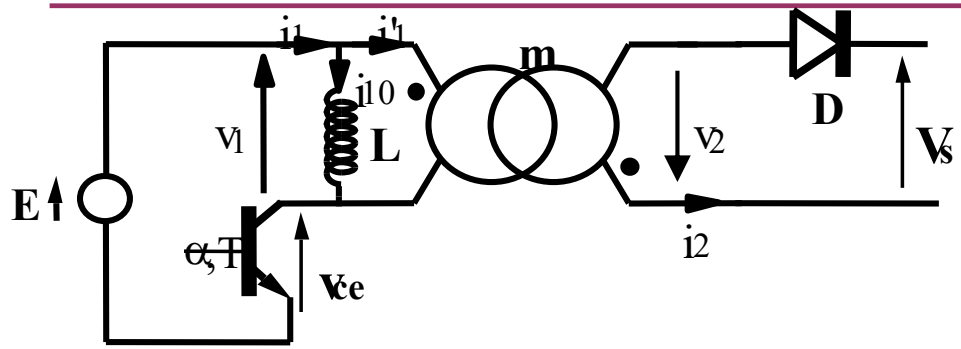

$\alpha' T < t < T$: T and D both reverse
All currents are zero
=> $v_1 = 0$; $v_2 = 0$ => $\varphi = 0$

Discontinuous mode: chronograms

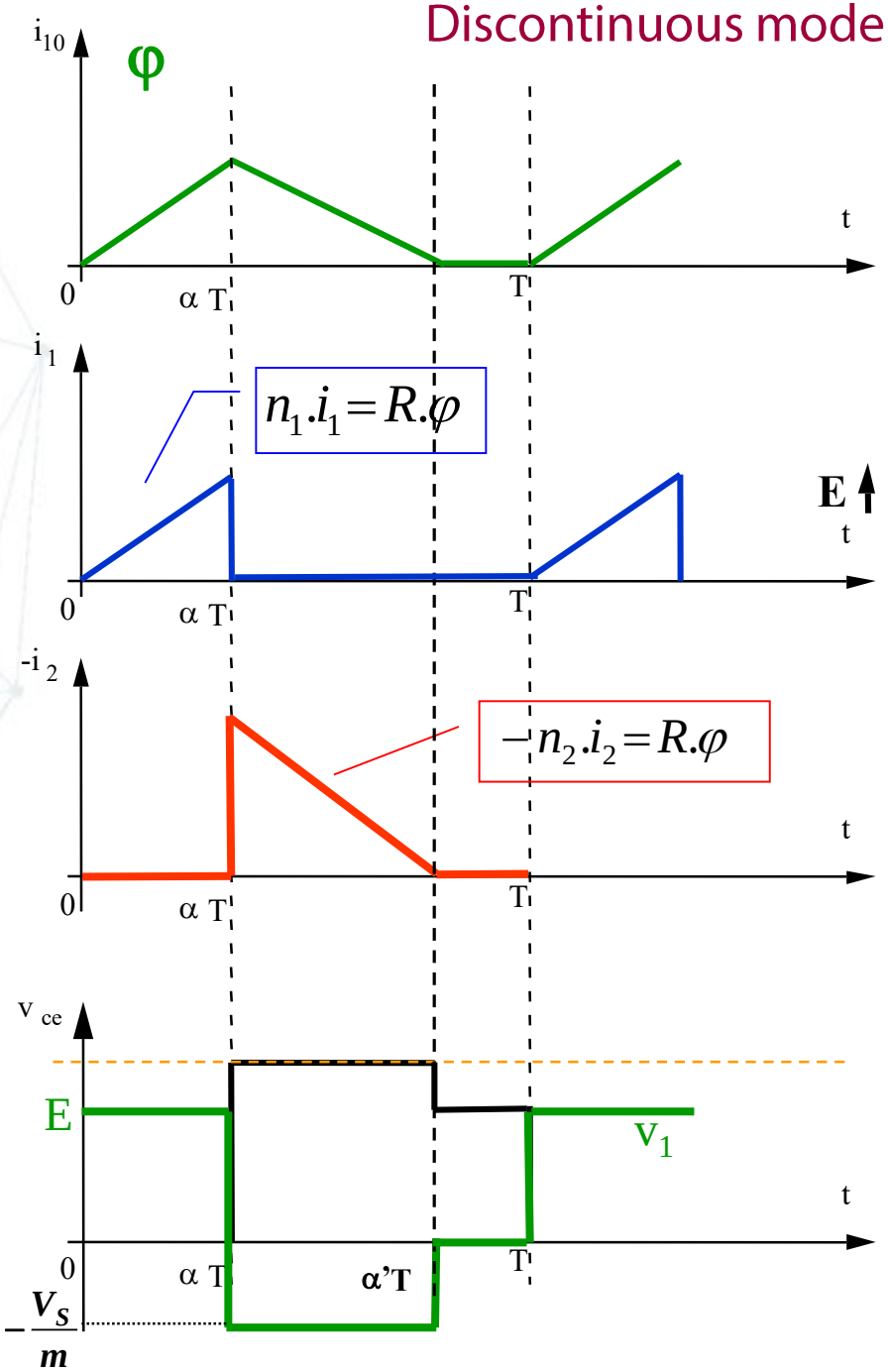

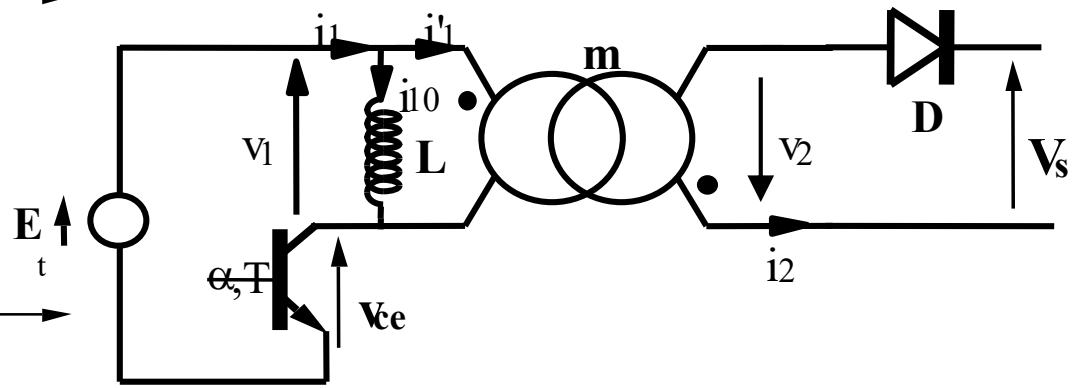

Output voltage calculation: Transferred energy

$$W_L = \frac{1}{2}.L.I_{1max}^2 = \frac{1}{2}.L.\left(\frac{\alpha.E.T}{L}\right)^2$$

$$P_S = V_S.I_S = f.W_L$$

$$\boxed{V_S = \frac{\alpha^2.E^2.T}{2.L.I_S}}$$

Discontinuous mode: output characteristics

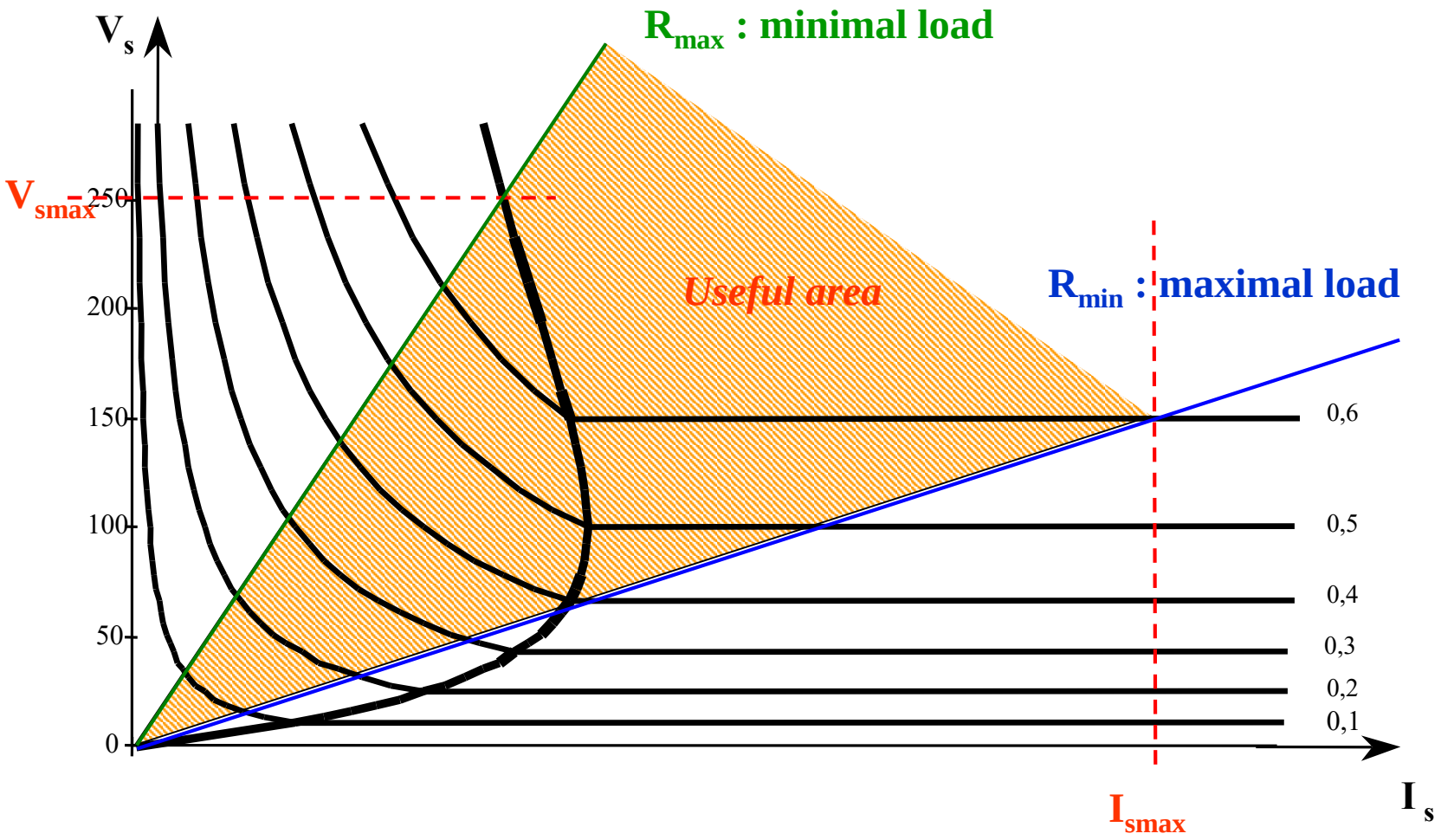

Boundary mode: Output filtering

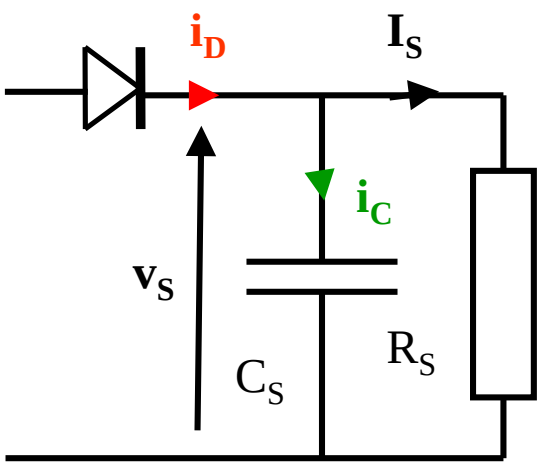

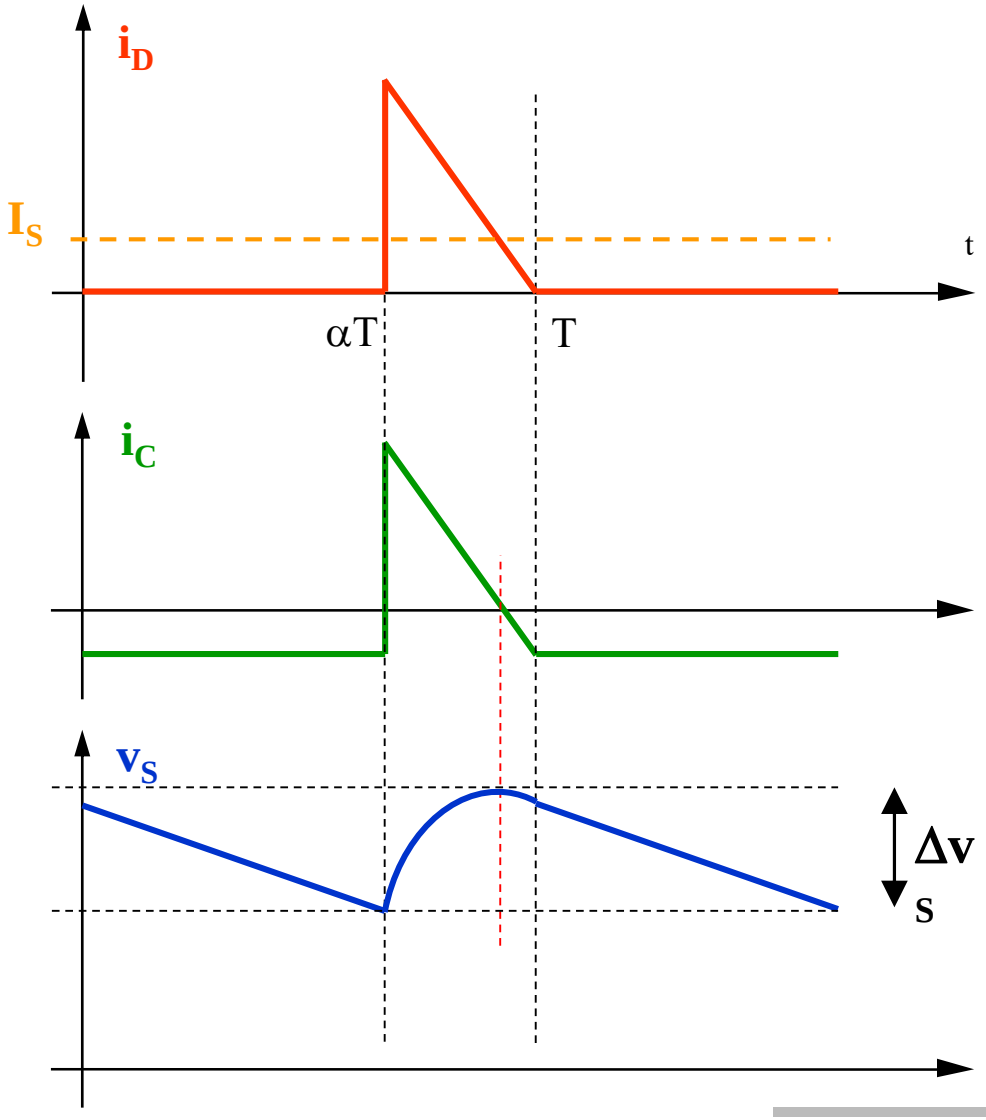

Boundary mode: capacitor calculation

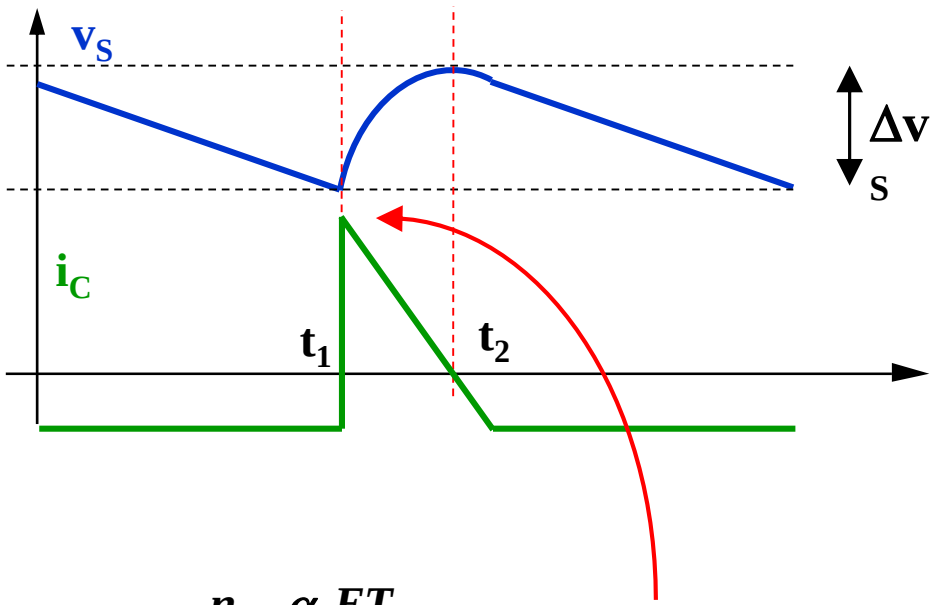

$$\Delta v_S = \frac{1}{C_S}\int_{t_1}^{t_2} i_C(t)dt = k_v.V_S$$

$$t_1 = \alpha T$$

$$I_{D\max} = \frac{n_1}{n_2}.\frac{\alpha.ET}{L}$$

$$I_{D\max} = \frac{n_1}{n_2}.\frac{\alpha.ET}{L}$$

$$I_{C\max} = I_{D\max} - I_S$$

$$i_C(t_2) = 0$$

C_S *calculation*

Boundary mode: sizing components

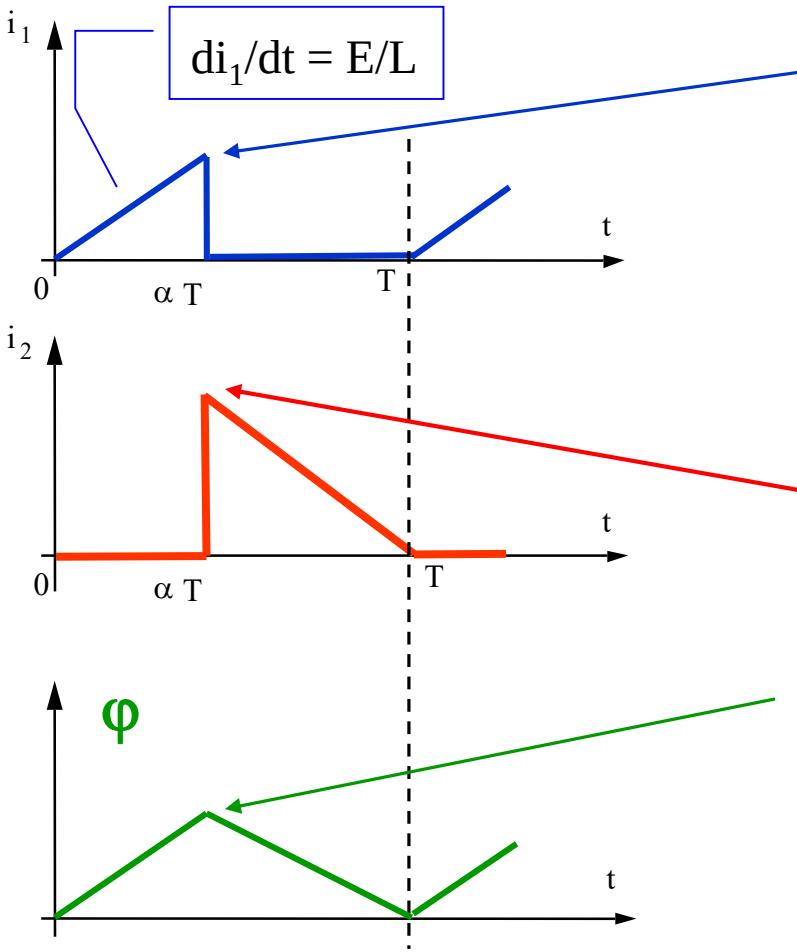

$$I_{1max} = \frac{\alpha.E.T}{L} \qquad I_{1moy} = \frac{\alpha^2.E.T}{2L}$$

$$I_{1eff}^2 = \frac{1}{T}.\int_0^T i_1^2(t).dt = \frac{1}{T}.\left(\frac{E}{L}\right)^2.\frac{\alpha^3 T^3}{3} = \frac{\alpha}{3}.I_{1max}^2$$

$$I_{1eff} = \sqrt{\frac{\alpha}{3}}.I_{1max}$$

$$I_{2max} = \frac{n_1}{n_2}.I_{1max}$$

$$I_{2eff} = \sqrt{\frac{1-\alpha}{3}}.I_{2max}$$

$$\varphi_{max} = \frac{n_1 I_{1max}}{R}$$

Non-saturation : $\varphi_{max} = A_e B_{sat}$

$$I_{1max} < \frac{R.B_{sat}.A_e}{n_1}$$

Boundary mode: transformer sizing

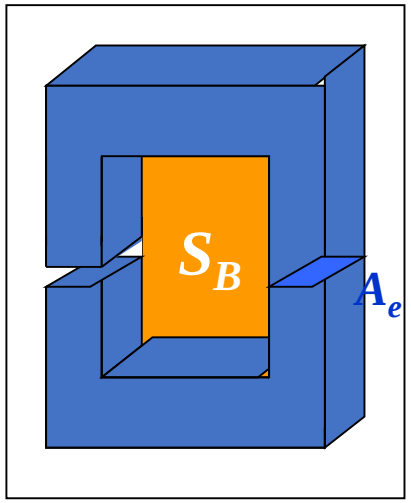

$$\delta = \frac{I_{1eff}}{s_{sp1}} = \frac{I_{2eff}}{s_{sp2}}$$ < max current density: δ_{max}

$$S_{Tcu} = n_1.s_{sp1} + n_2.s_{sp2}$$ < k_B. Window area S_B

k_B = *winding coefficient*

$$k_B.S_B > n_1.\frac{I_{1eff}}{\delta_{max}} + n_2.\frac{I_{2eff}}{\delta_{max}}$$

$$I_{1eff} = \sqrt{\frac{\alpha}{3}}.I_{1max}$$

$$I_{2eff} = \sqrt{\frac{1-\alpha}{3}}.I_{2max}$$

$$I_{2max} = \frac{n_1}{n_2}.I_{1max}$$

$$\boxed{I_{1max} < \frac{k_B.S_B.\delta_{max}}{n_1}.\frac{\sqrt{3}}{\sqrt{\alpha}+\sqrt{1-\alpha}}}$$

Boundary mode: transformer sizing

$$P_S = f.W_L = f.\frac{1}{2}.L.I_{1\max}^2$$

$$I_{1\max} < \frac{R.B_{sat}.A_e}{n_1}$$

$$I_{1\max} < \frac{k_B.S_B.\delta_{\max}}{n_1}.\frac{\sqrt{3}}{\sqrt{\alpha}+\sqrt{1-\alpha}}$$

$$P_S < f.\frac{L}{2}.\frac{R.B_{sat}.A_e}{n_1}.\frac{k_B.S_B.\delta_{\max}}{n_1}.\frac{\sqrt{3}}{\sqrt{\alpha}+\sqrt{1-\alpha}}$$

$$\boxed{A_e.S_B > 2.\frac{\sqrt{\alpha}+\sqrt{1-\alpha}}{\sqrt{3}}.\frac{P_S}{f.k_B.B_{sat}.\delta_{\max}}}$$

With P_S

With f

Control principle

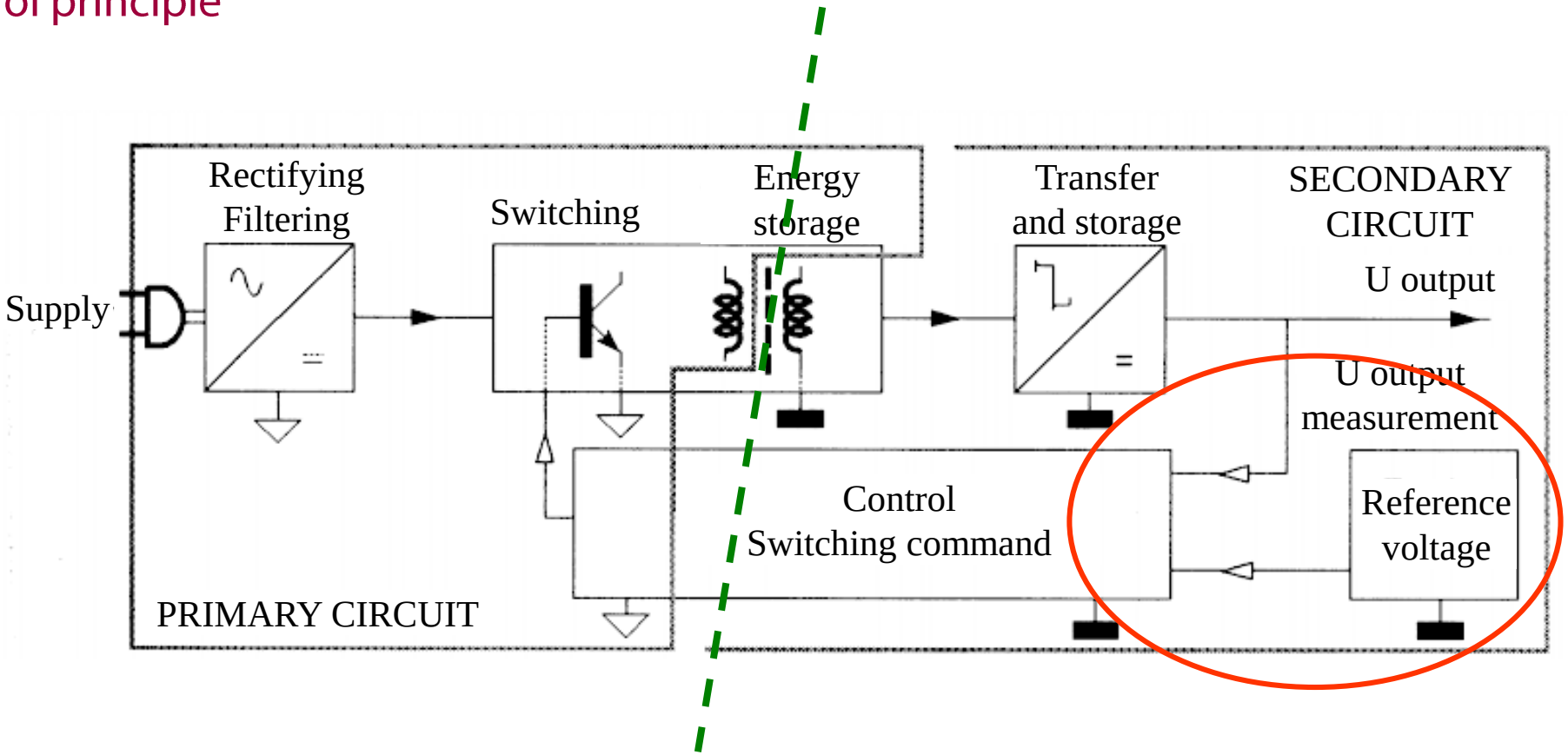

Output voltage control

Boundary mode holding

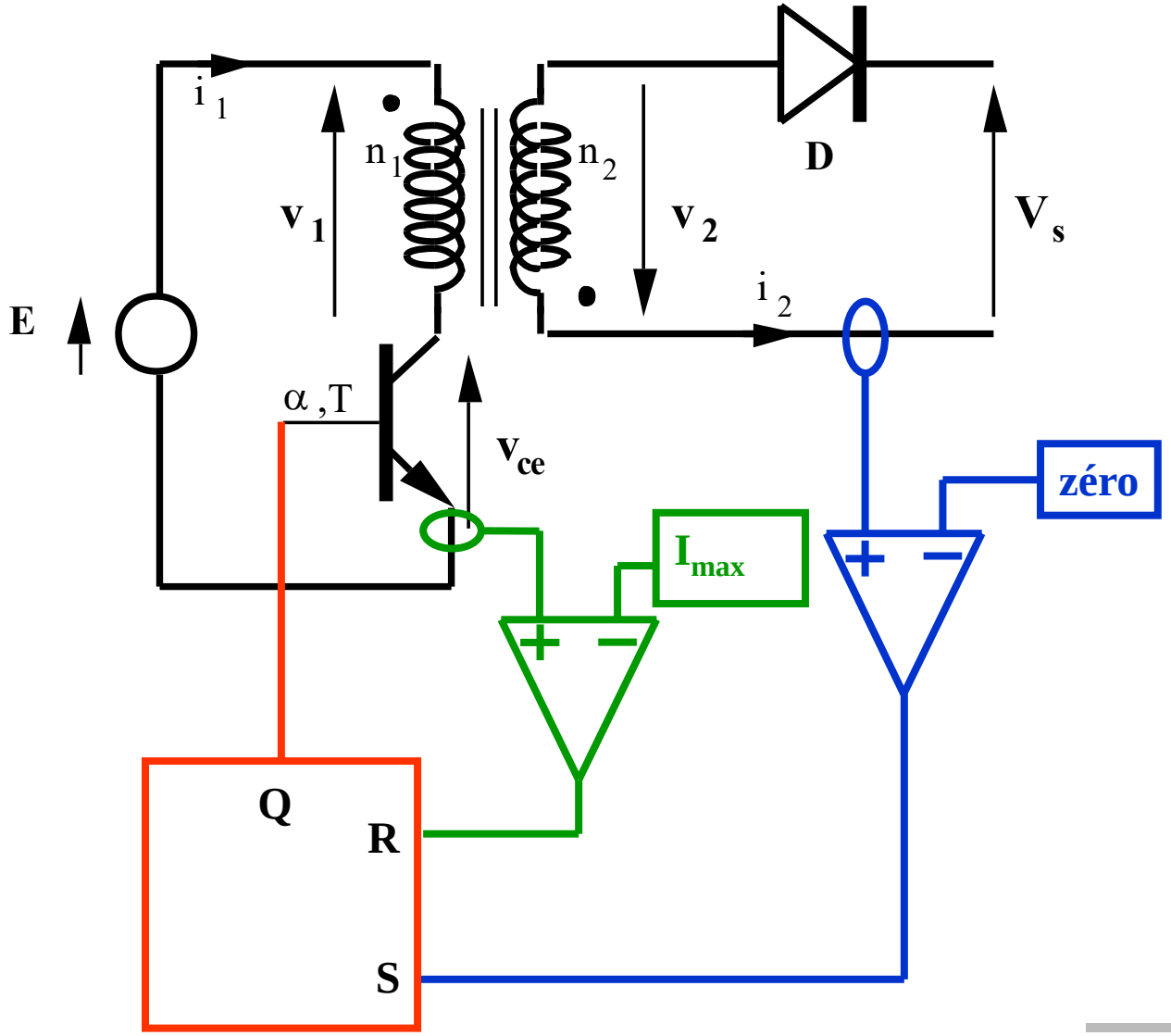

Example: LT8302

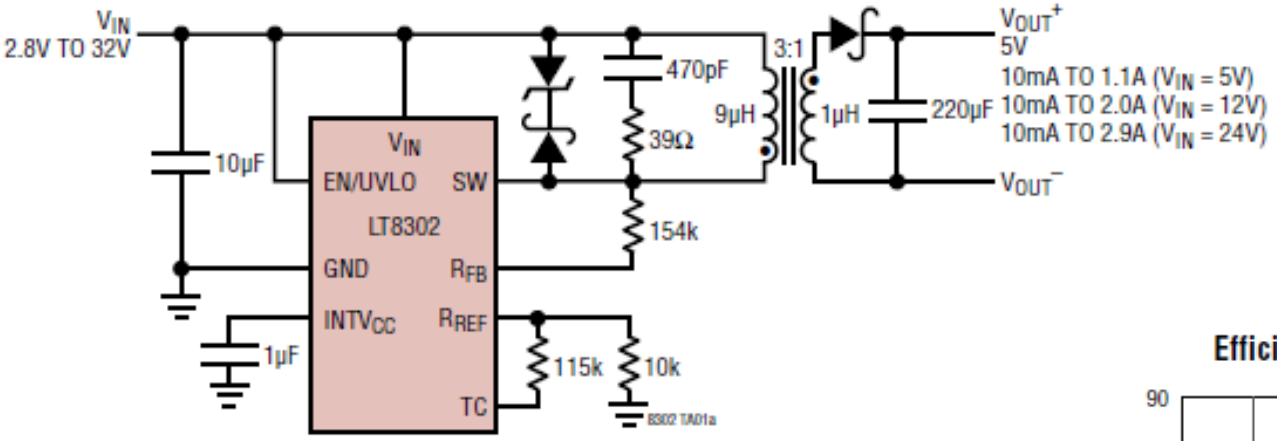

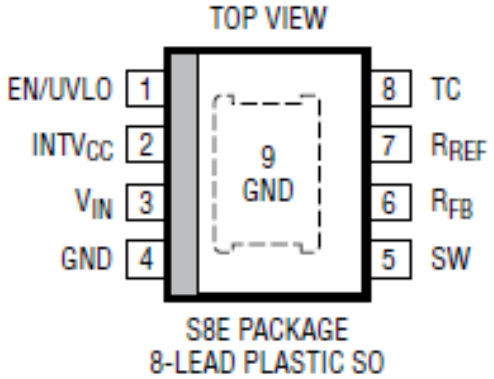

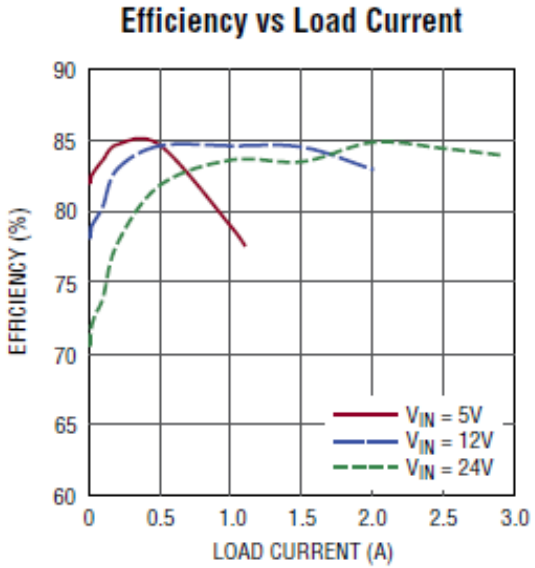

Example: LT8302 (internal scheme)

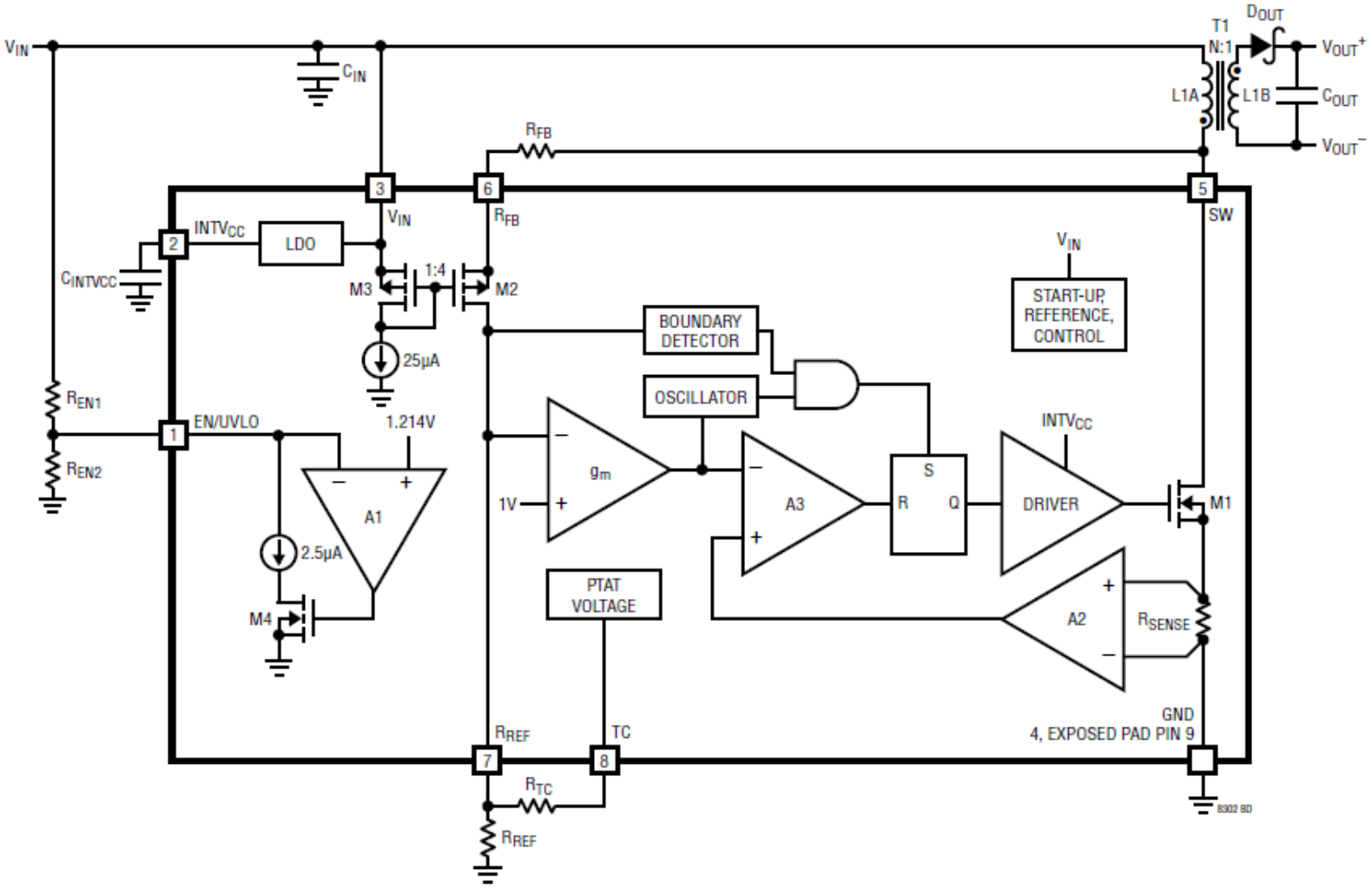

Example: LT8302

Boundary Mode Waveforms

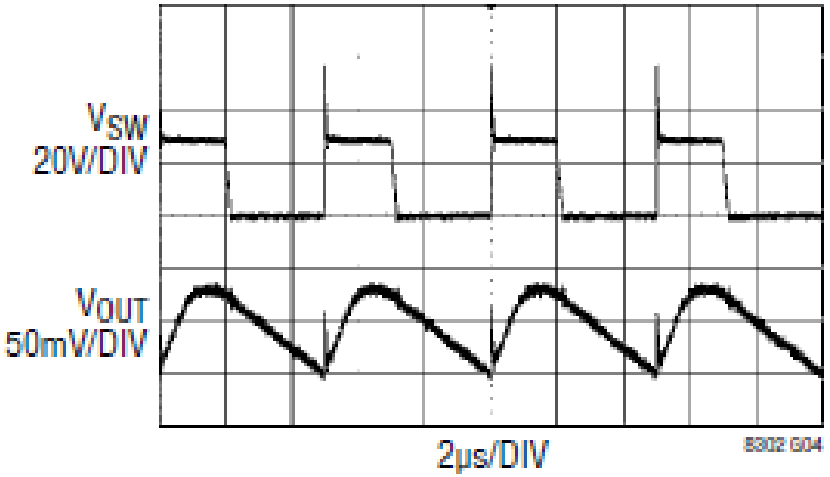

FRONT PAGE APPLICATION
V_{IN} = 12V
I_{OUT} = 2A

Discontinuous Mode Waveforms

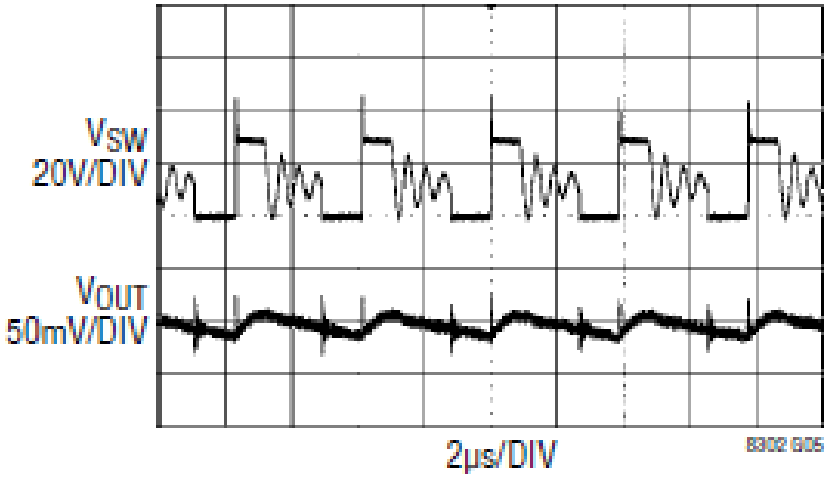

FRONT PAGE APPLICATION
V_{IN} = 12V
I_{OUT} = 0.5A

Flyback examples

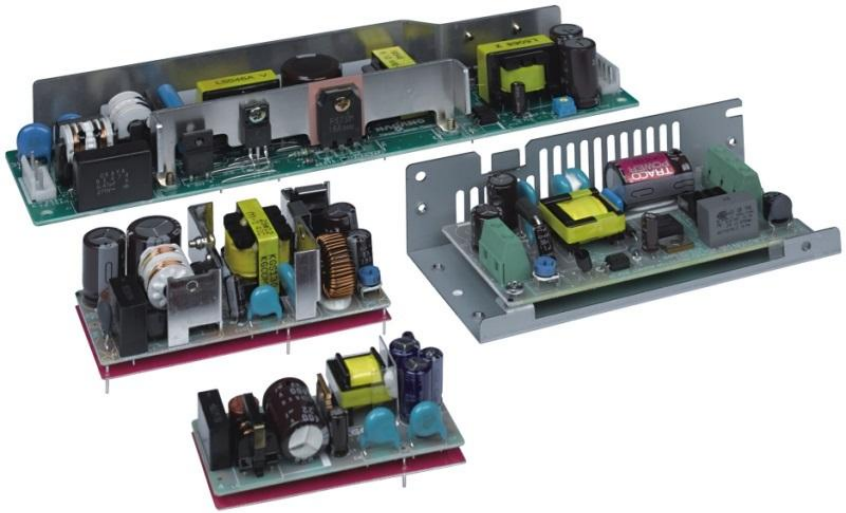

Forward

Flyback principle

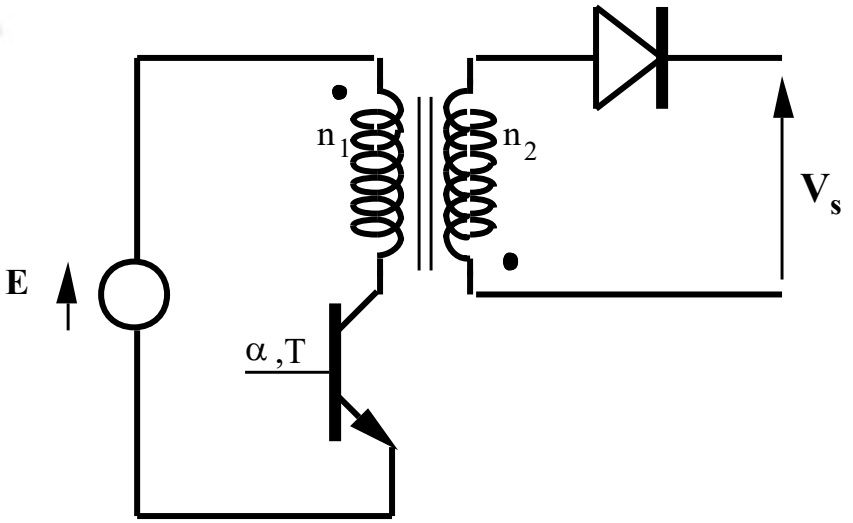

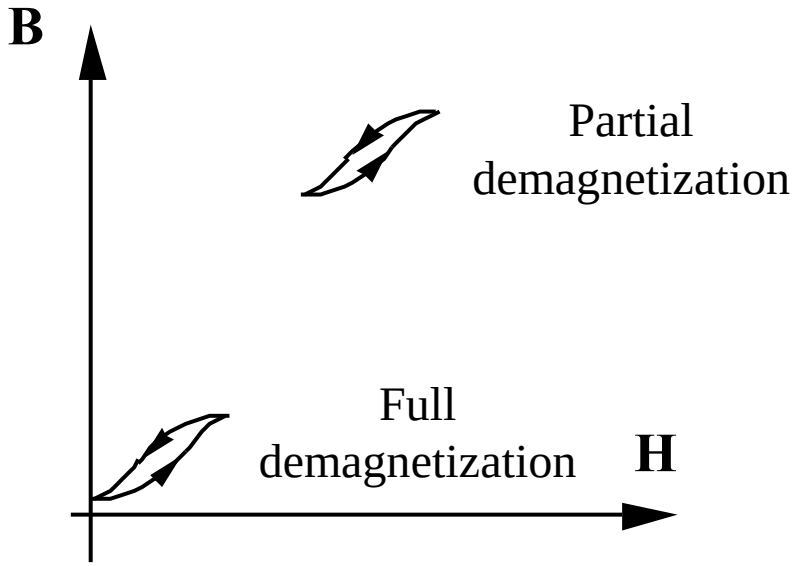

Easiness, low power, few components

Limited for high power due to energy storage limitations

Forward principle

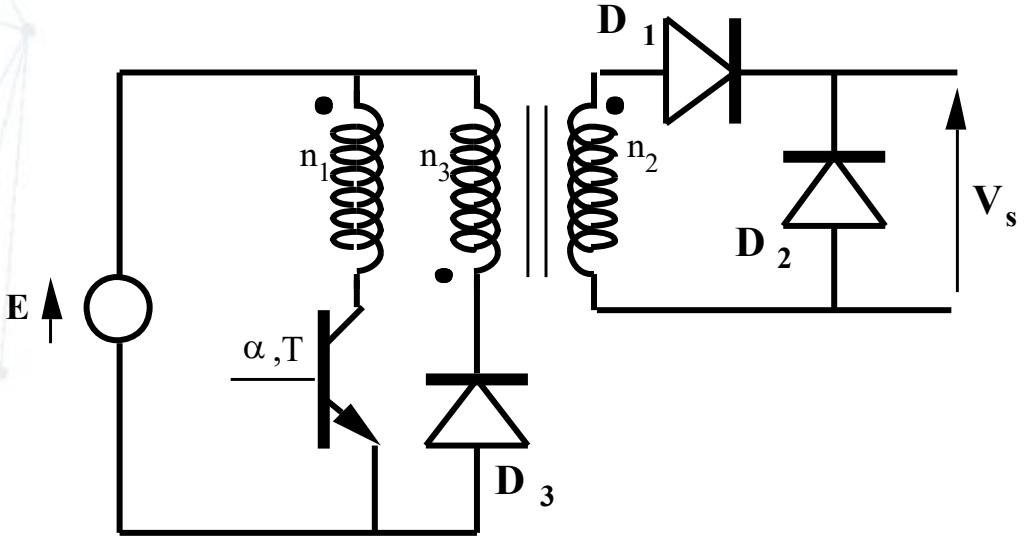

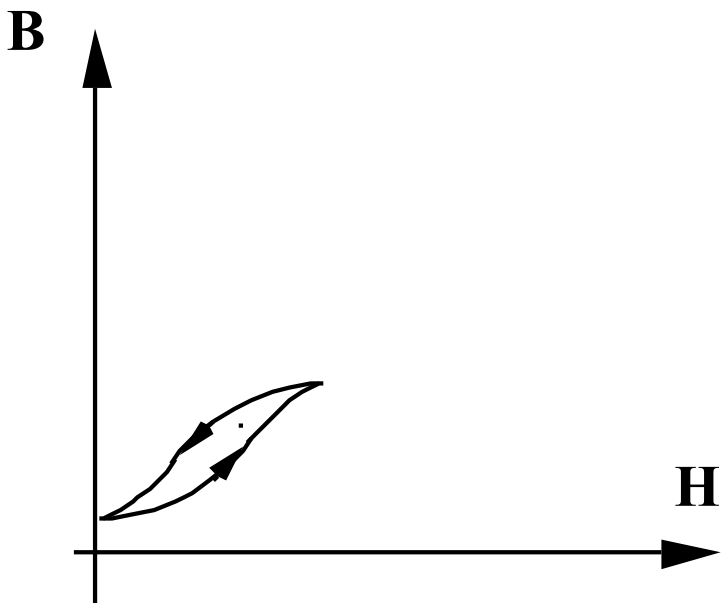

Magnetic component optimized, more components

Hopkinson's law

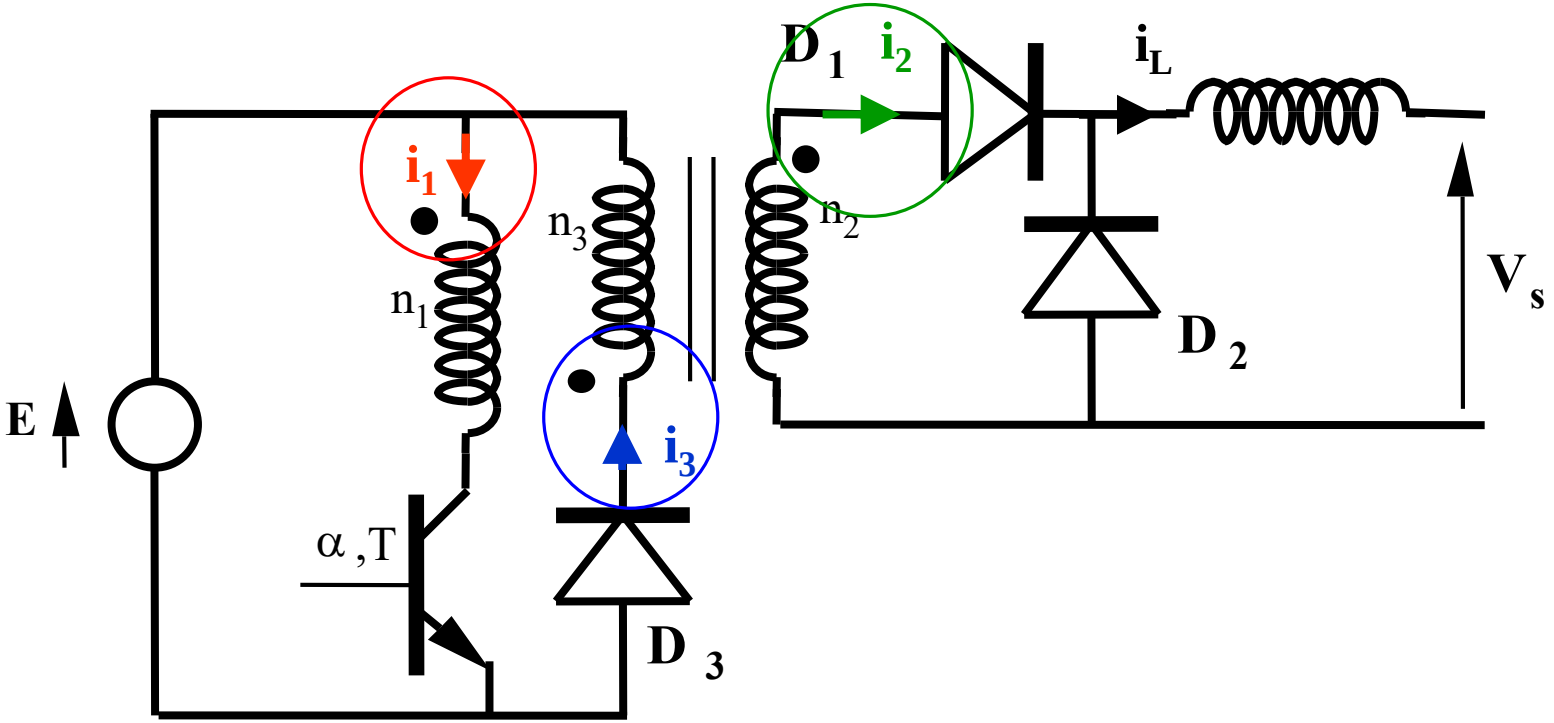

$$\oint H.dl = R.\varphi = n_1.i_1 + n_3.i_3 - n_2.i_2$$

Continuous mode study: $i_L > 0$

At least one of the two diodes D_1 and D_2 forwards.

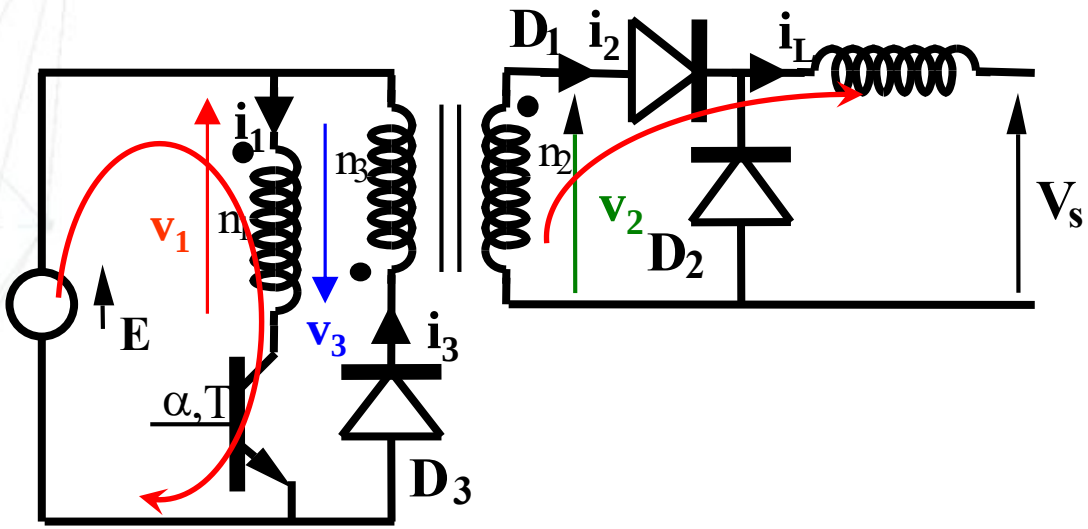

$$v_1 = E = n_1 . \frac{d\varphi}{dt}$$ *magnetization*

$$v_2 = n_2 . \frac{d\varphi}{dt} \qquad v_3 = n_3 . \frac{d\varphi}{dt}$$

$$0 < t < \alpha T$$

T_p forward.

$$v_1 = E \quad => \quad v_2 = \frac{n_2}{n_1} . E$$

D_1 forward, D_2 reverse
$i_2 = i_L > 0$

$$v_1 = E \quad => \quad v_3 = \frac{n_3}{n_1} . E$$

D_3 reverse

$$n_1 . i_1 - n_2 . i_2 = R . \varphi$$

Continuous mode study

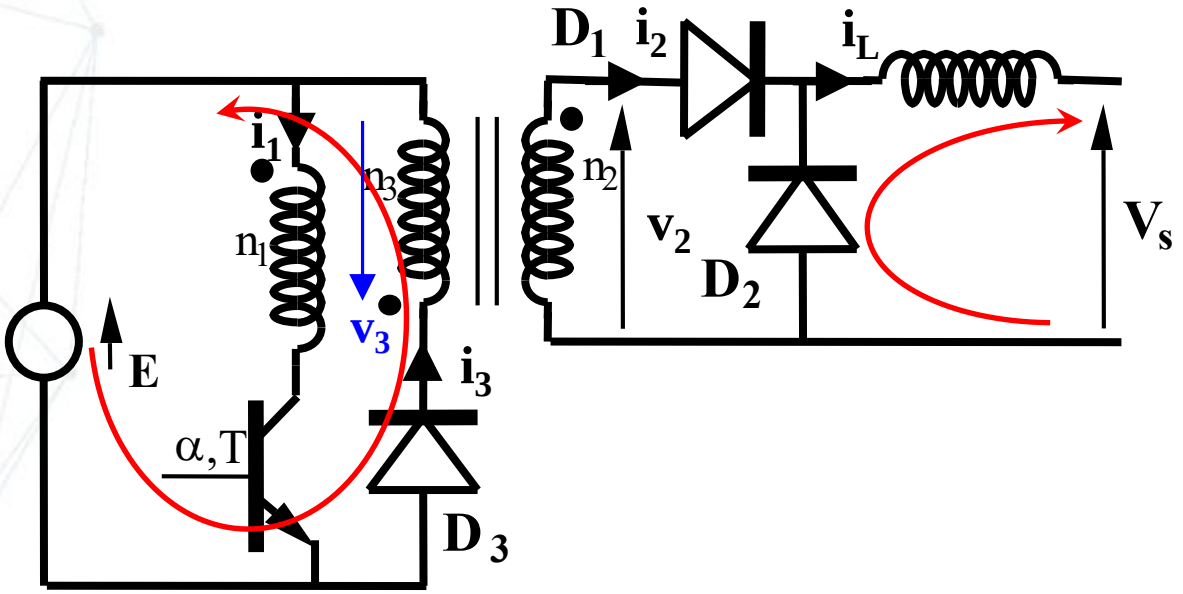

T_p *opened* => $i_1 = 0$

$$n_3.i_3 - n_2.i_2 = R.\varphi > 0$$

$i_3 > 0$ => D_3 *forward*

$$v_3 = -E = n_3.\frac{d\varphi}{dt}$$ *demagnetization*

$$v_2 = -\frac{n_2}{n_3}E$$ D_1 *reverse,* D_2 *forward* => $i_2 = 0$

$$L.\frac{di_L}{dt} = -V_S$$

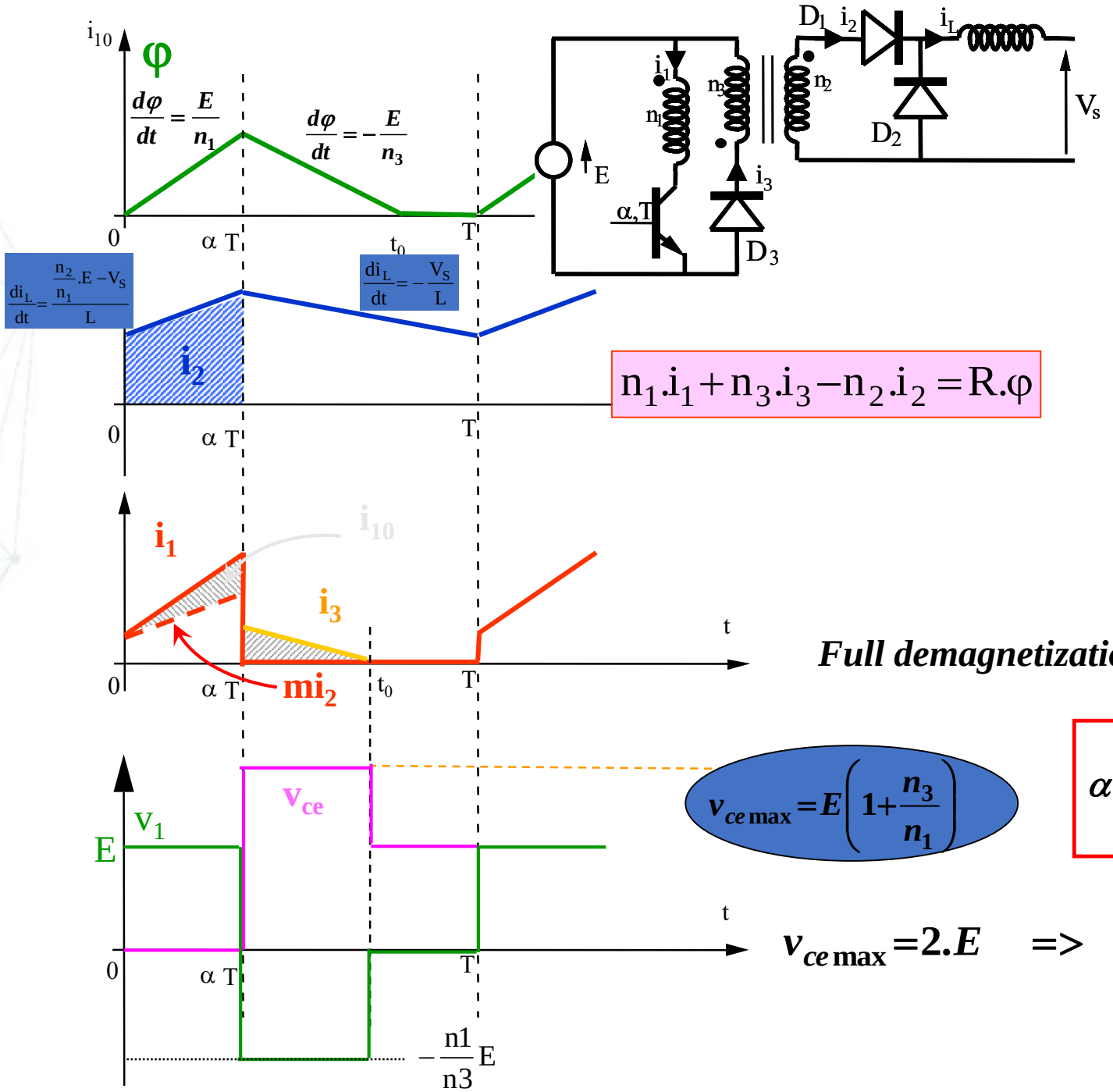

$$n_1.i_1 + n_3.i_3 - n_2.i_2 = R.\varphi$$

$$i_{10} = \frac{R\varphi}{n_1} \qquad i_3 = \frac{R\varphi}{n_3}$$

$$i_3 = \frac{n_1}{n_3}.\frac{\alpha.ET}{L_1} - \frac{E}{L_3}t$$

$$L_1 = \frac{n_1^2}{R} \quad et \quad L_3 = \frac{n_3^2}{R}$$

Full demagnetization if: $t_0 < T$

$$v_{ce\,max} = E\left(1 + \frac{n_3}{n_1}\right)$$

$$\alpha.\left(1 + \frac{n_3}{n_1}\right) < 1$$

$$v_{ce\,max} = 2.E \quad => \quad n_1 = n_3 \quad => \quad \alpha < \frac{1}{2}$$

Continuous mode study: voltage transfer

$$\frac{di_L}{dt} = \frac{mE - V_S}{L}$$

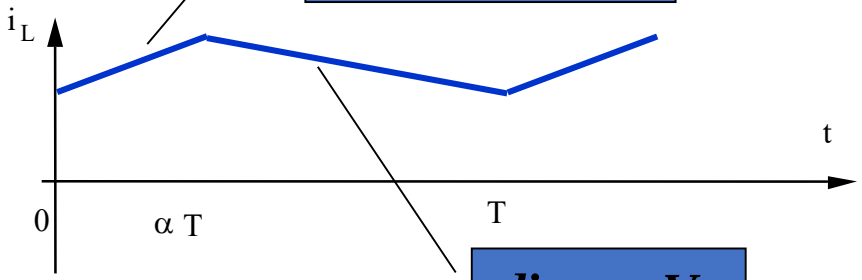

$$\frac{di_L}{dt} = -\frac{V_S}{L}$$

$$< v_L > = 0$$

$$\Delta i_L = \frac{mE - V_S}{L} . \alpha T = \frac{V_S}{L}(1-\alpha)T$$

$$\boxed{V_S = \alpha . m . E}$$

Continuous mode study: Components sizing

- ***Filtering capacitor: C_S***
- ***Transformer => Ae.SB***
- ***Output inductance => Ae.SB***

Continuous mode study: Filtering capacitor

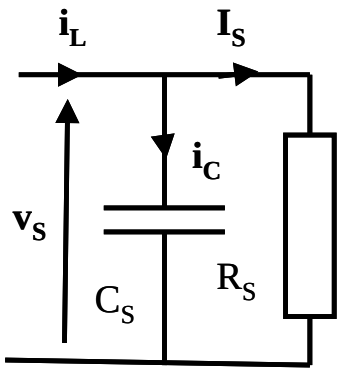

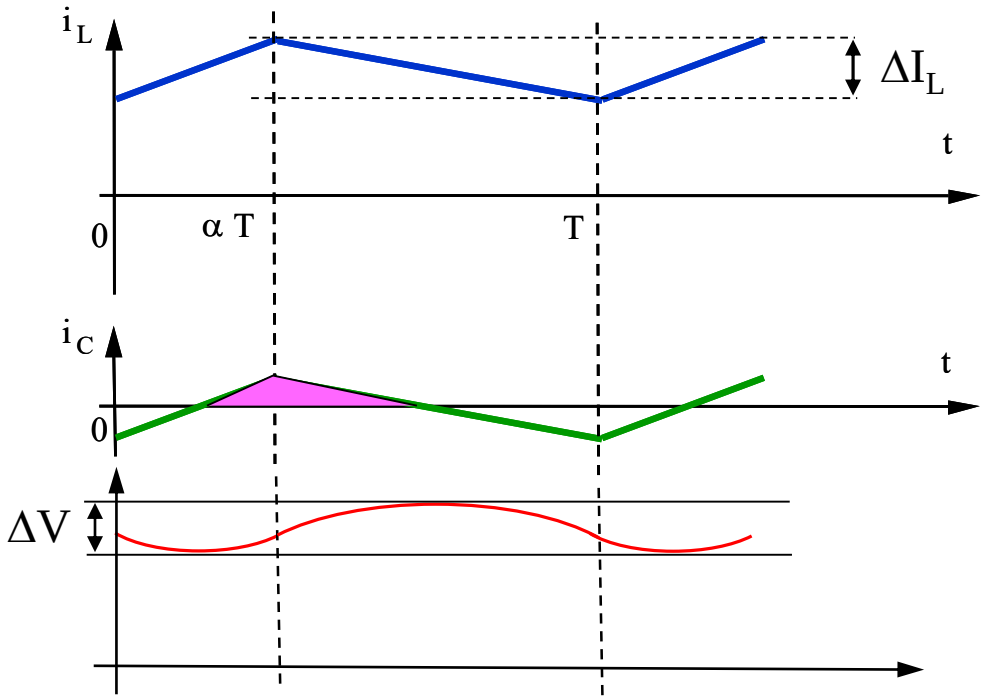

$$\Delta V = \frac{1}{C_S} \cdot \int_{\frac{\alpha T}{2}}^{\frac{T+\alpha T}{2}} i_C(t)dt = \frac{1}{C_S} \cdot \frac{1}{2} \cdot i_{C\,max} \cdot \frac{T}{2}$$

$$i_{C\,max} = \frac{\Delta I_L}{2} = \frac{1}{2} \cdot \frac{V_S}{L}(1-\alpha).T$$

Max ripple for α = 0.5

$$C_S = \frac{m.E.T^2}{32.L.\Delta V}$$

Continuous mode study: transformer sizing

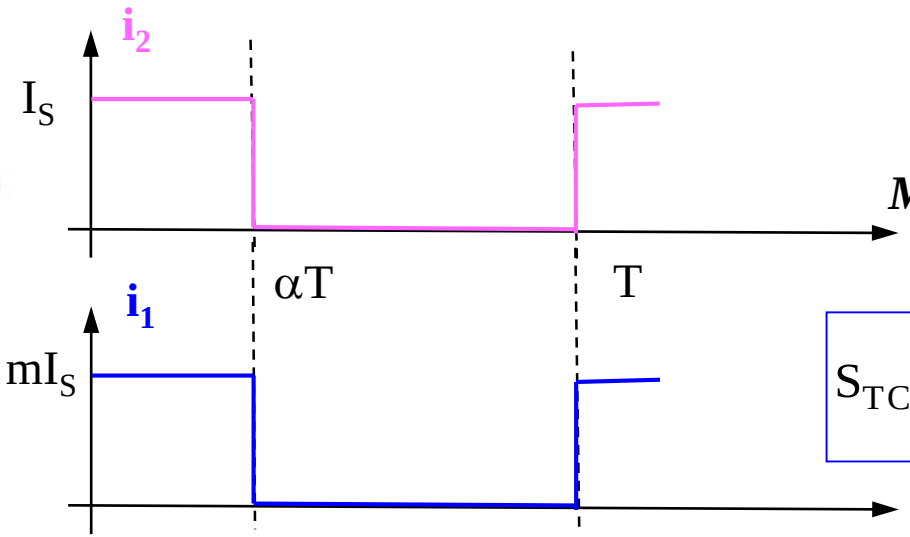

Magnetising current neglected

$$I_{2eff} = \sqrt{\alpha}.I_S$$

$$I_{1eff} = m.\sqrt{\alpha}.I_S$$

$$S_{TCu} = n_1.\frac{I_{1eff}}{\delta_{max}} + n_2.\frac{I_{2eff}}{\delta_{max}} = 2.\sqrt{\alpha}.n_2.\frac{I_S}{\delta_{max}} < k_B.S_B$$

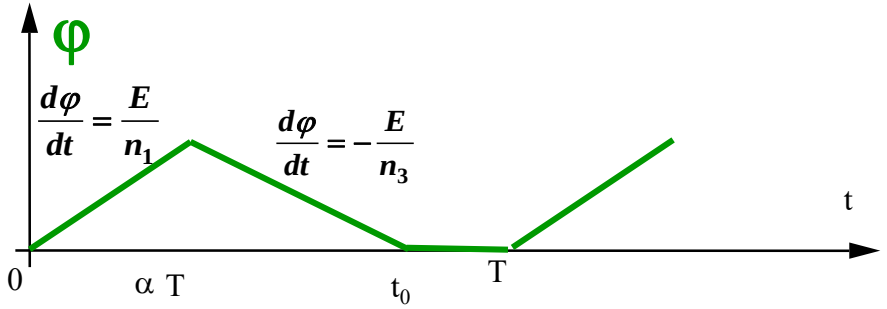

$$\varphi_{max} = \frac{E}{n_1}.\alpha.T < A_e.B_{sat}$$

$$k_B.S_B.A_e.B_{sat} > \frac{2.\sqrt{\alpha}.n_2.I_S.\alpha.E.T}{\delta_{max}.n_1}$$

$$A_e.S_B > \frac{2.\sqrt{\alpha}.P_S}{f.k_B.B_{sat}.\delta_{max}}$$

With P_S

With f

Continuous mode study: inductor sizing

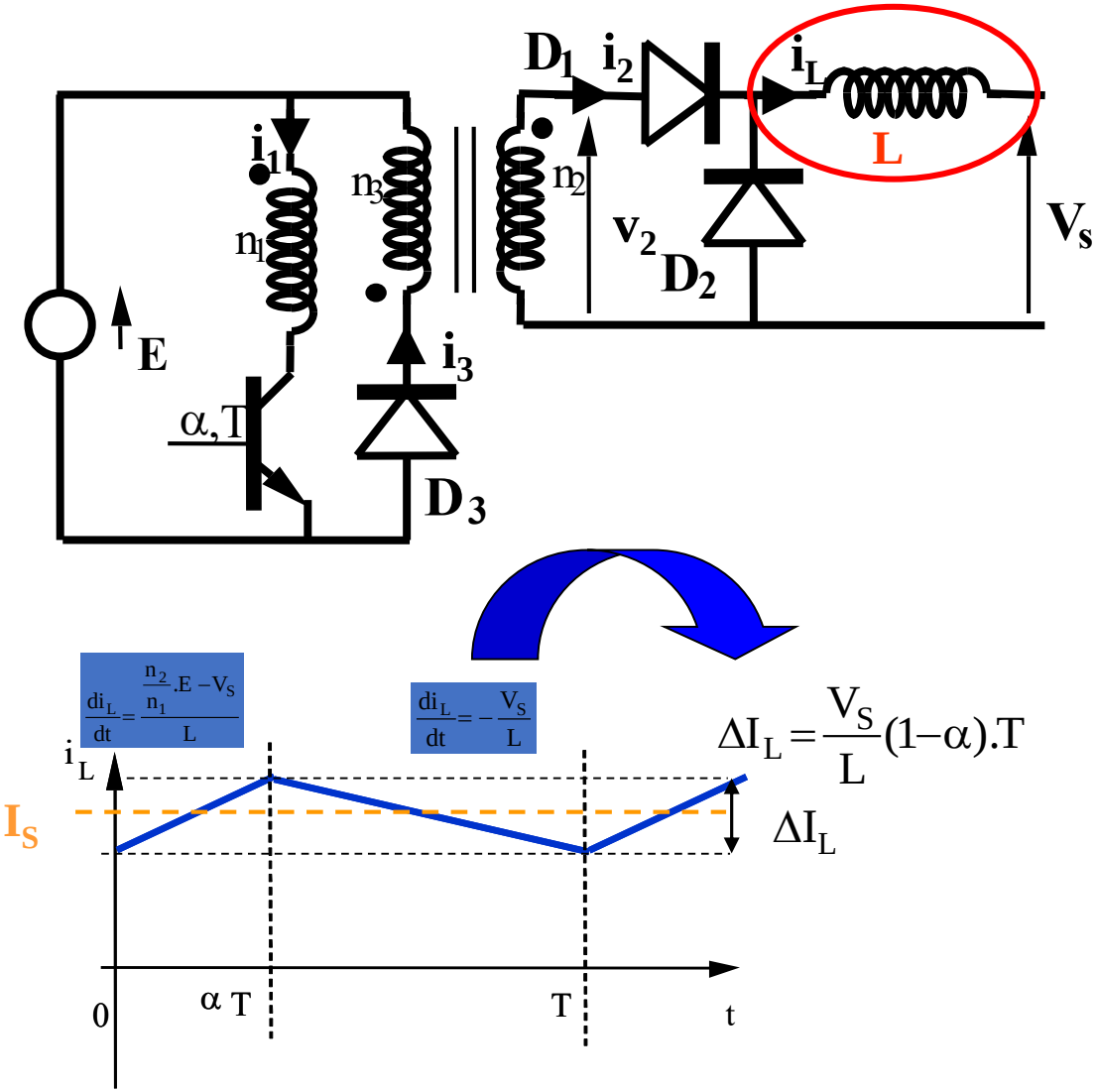

$$\Delta I_L = \frac{V_S}{L}(1-\alpha).T$$

Hold the continuous mode

$$I_S > \frac{\Delta I_L}{2}$$

$$\boxed{L > \frac{\alpha.V_S}{2I_S.f}}$$

Example

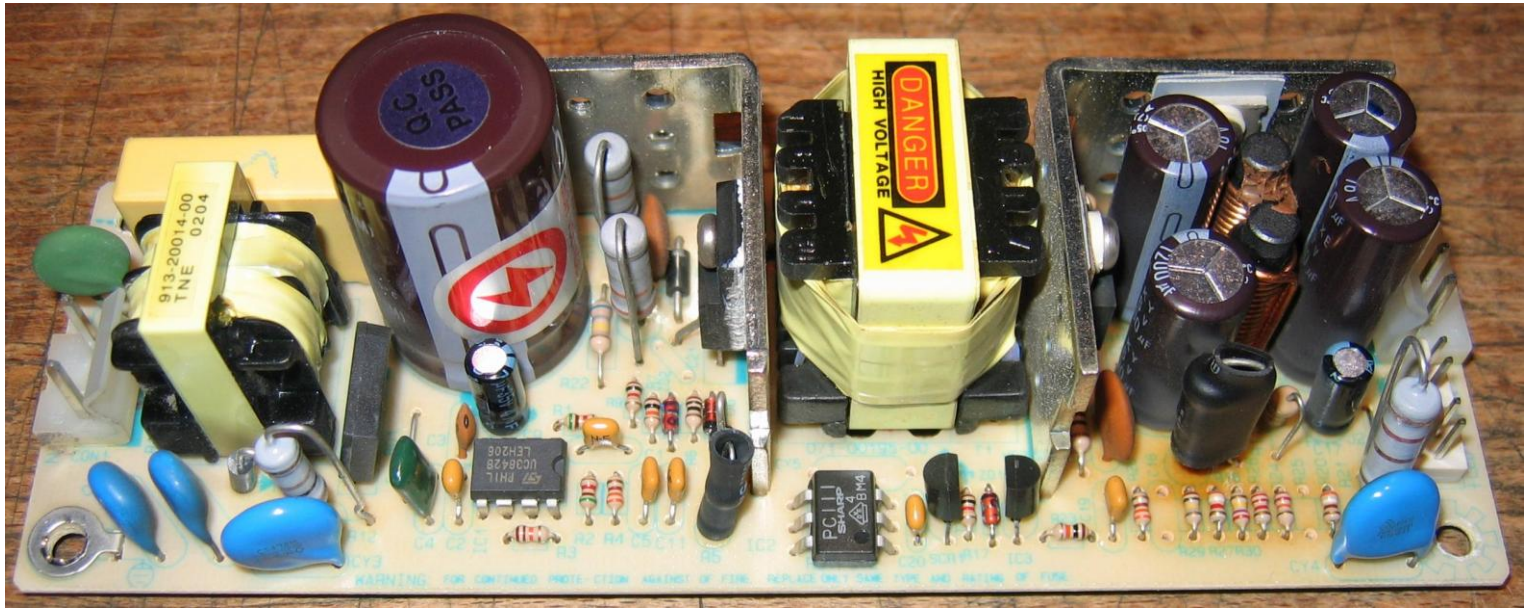

Manufacturer reference: CI Design Y0-2040AA
Input : 100 à 240 Vac
Output : 12 Vdc (2 A) 5 Vdc (3 A)

Example

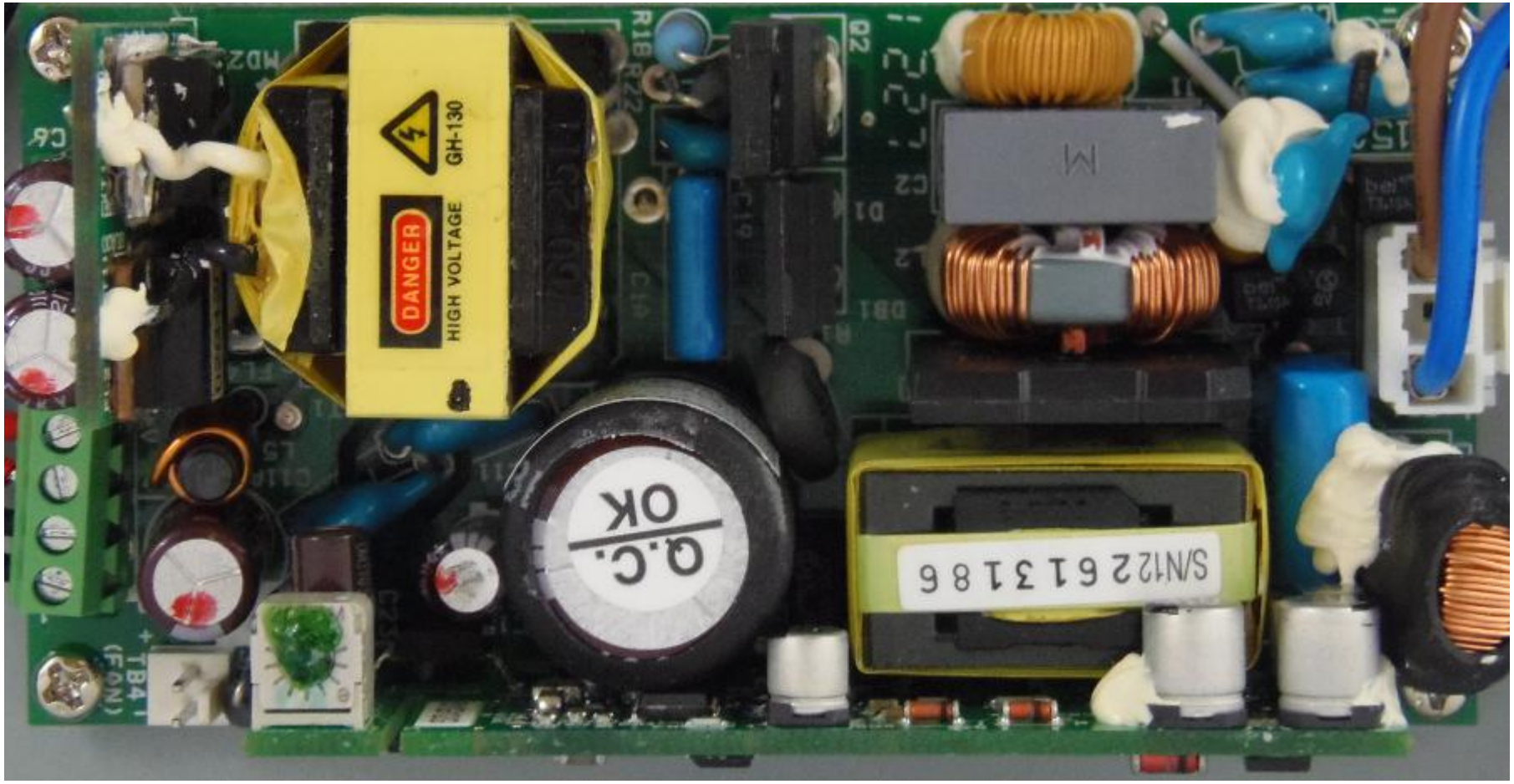

NuForce

Push-Pull

Push-Pull

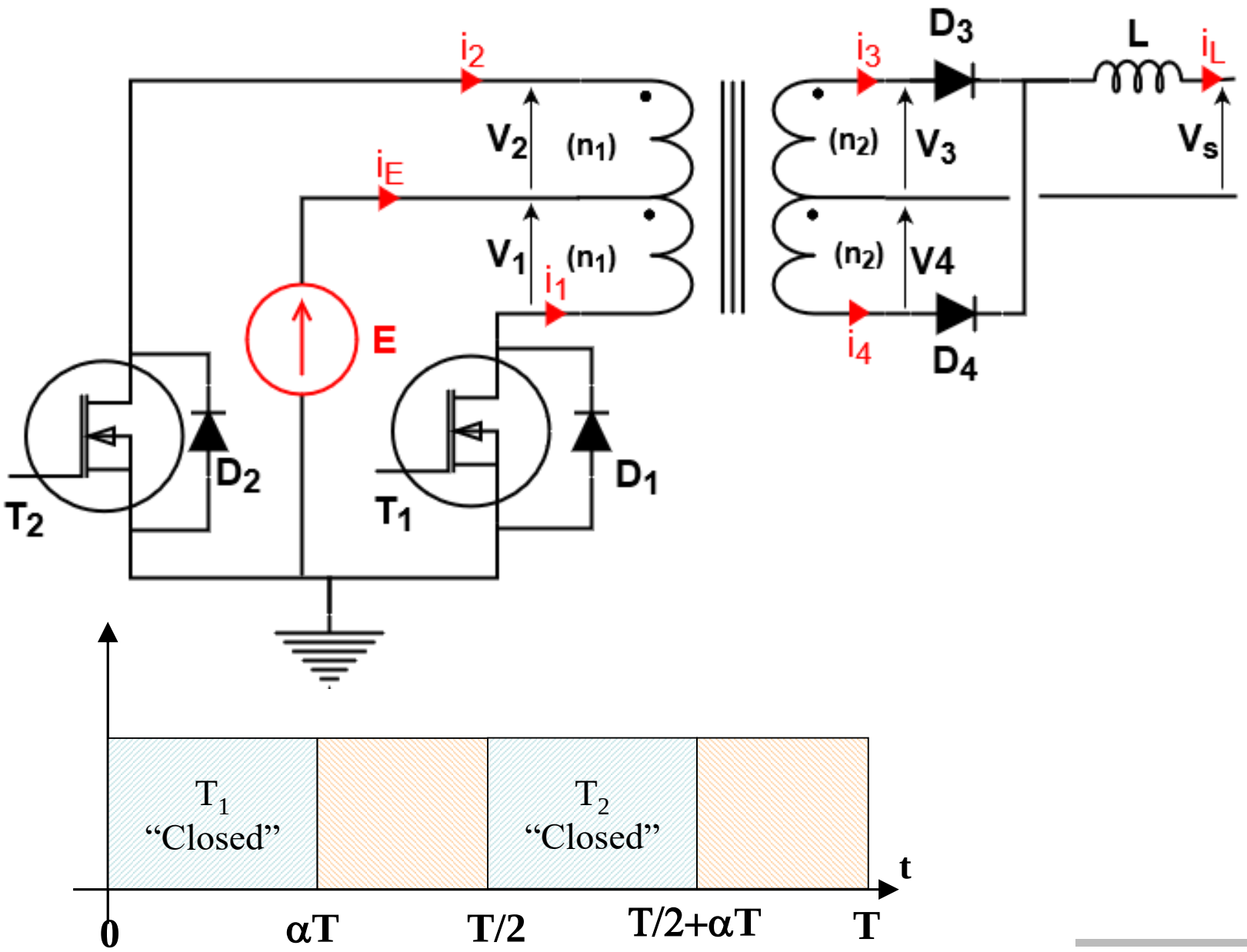
i2
V2
(n1)
iE
V1
(n1)
i1
E
T2
D2
T1
D1
i3
D3
(n2)
V3
(n2)
V4
i4
D4
L
iL
Vs
T1
"Closed"
T2
"Closed"
t
0
αT
T/2
T/2+αT
T

No load study : $i_L = 0$

0 < t < αT: T_1 "closed", T2 "open"

- $v_1 = n_1 . \frac{d\varphi}{dt} = E > 0$

Magnetization

- $v_2 = v_1 = E > 0$

D_2 « reverse »

$$-n_1 . i_1 = \mathcal{R} . \varphi$$

αT < t < T/2: T_1 & T_2 "open"

- $\mathcal{R} . \varphi = -n_1 . i_1 + n_1 . i_2 > 0$

D_2 « forward », D_1 « reverse »

- $\mathcal{R} . \varphi = n_1 . i_2 > 0$
- $v_2 = n_1 . \frac{d\varphi}{dt} = -E < 0$

Demagnetization

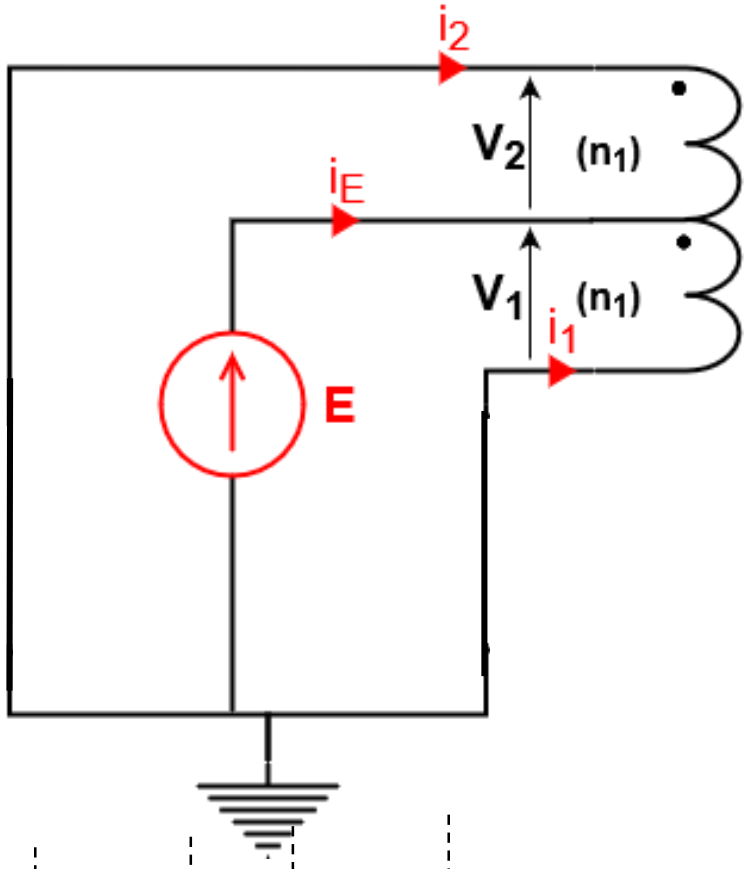

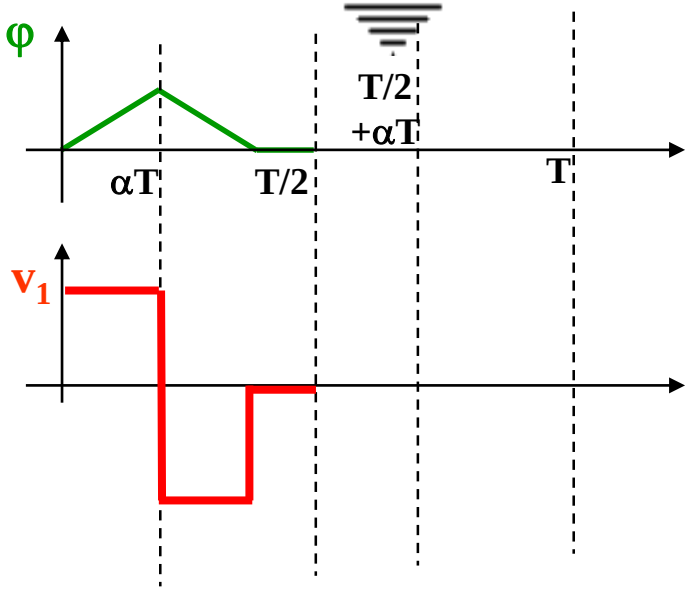

ENSEA
Beyond Engineering

No load study : $i_L = 0$

T/2 < t < T/2+αT: T_1 "open", T2 "closed"

- $v_1 = n_1 . \frac{d\varphi}{dt} = -E < 0$

Magnetization

- $v_2 = v_1 = -E < 0$

D_1 « reverse »

$$\boldsymbol{n_1 . i_2 = \mathcal{R} . \varphi}$$

T/2+αT < t < T: T_1 & T_2 "open"

- $\boldsymbol{\mathcal{R} . \varphi = -n_1 . i_1 + n_1 . i_2 < 0}$

D_1 « forward », D_2 « reverse »

- $\boldsymbol{\mathcal{R} . \varphi = -n_1 . i_1 < 0}$
- $v_2 = n_1 . \frac{d\varphi}{dt} = E > 0$

Demagnetization

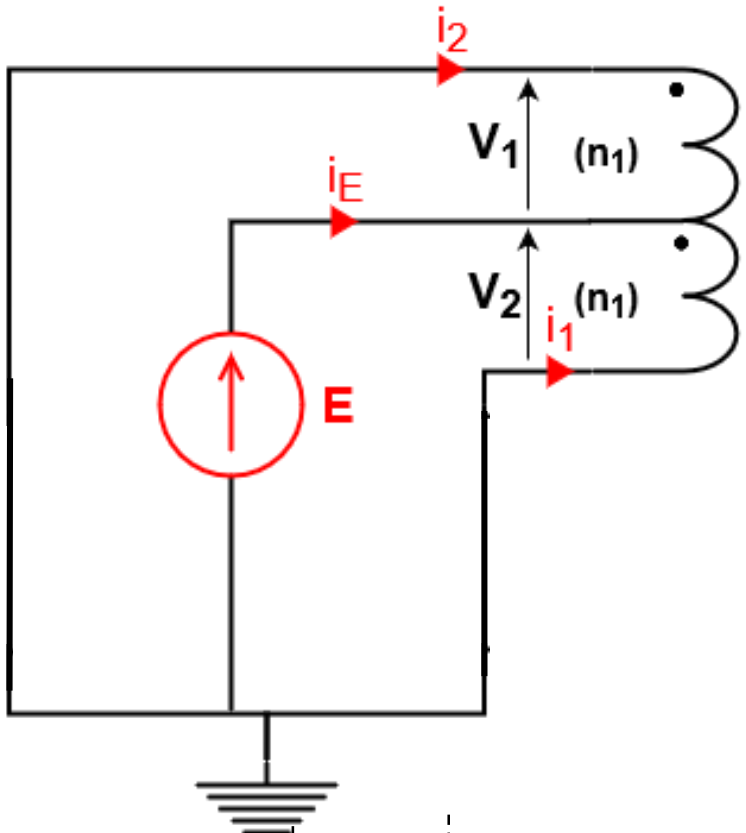

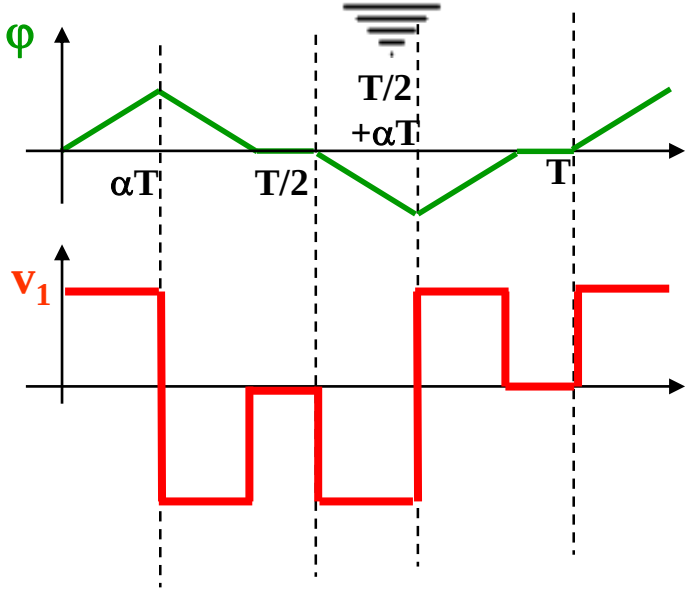

General properties

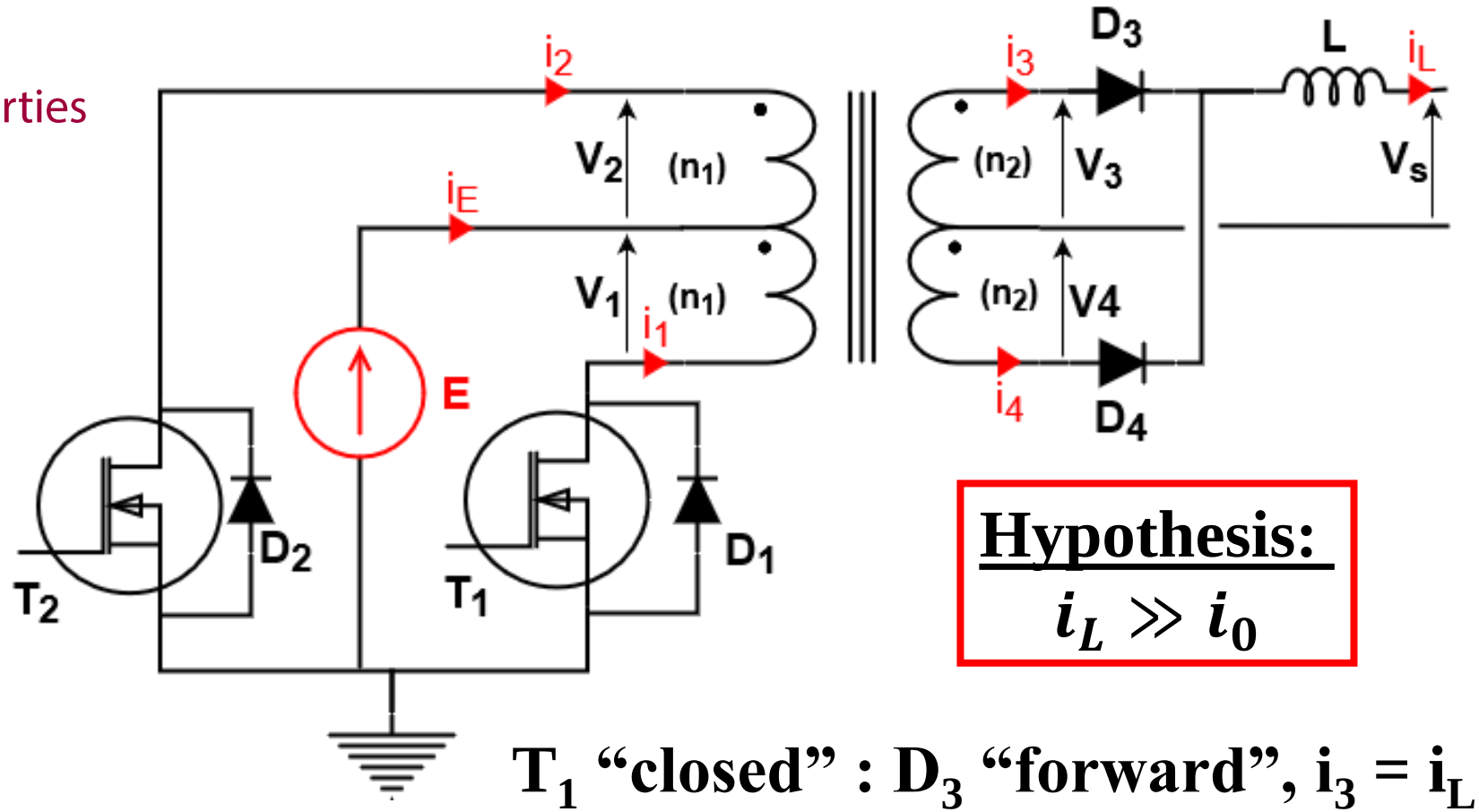

Hypothesis:

$$i_L \gg i_0$$

$$v_1 = v_2$$
$$v_3 = v_4$$
$$v_3 = \frac{n_2}{n_1} v_1$$

T_1 "closed" : D_3 "forward", $i_3 = i_L$
T_2 "closed" : D_4 "forward", $i_4 = i_L$

Hopkinson's law

$$\oint H.dl = \mathcal{R}.\varphi = -n_1.i_1 + n_1.i_2 - n_2.i_3 + n_2.i_4$$

Continuous mode study: magnetization

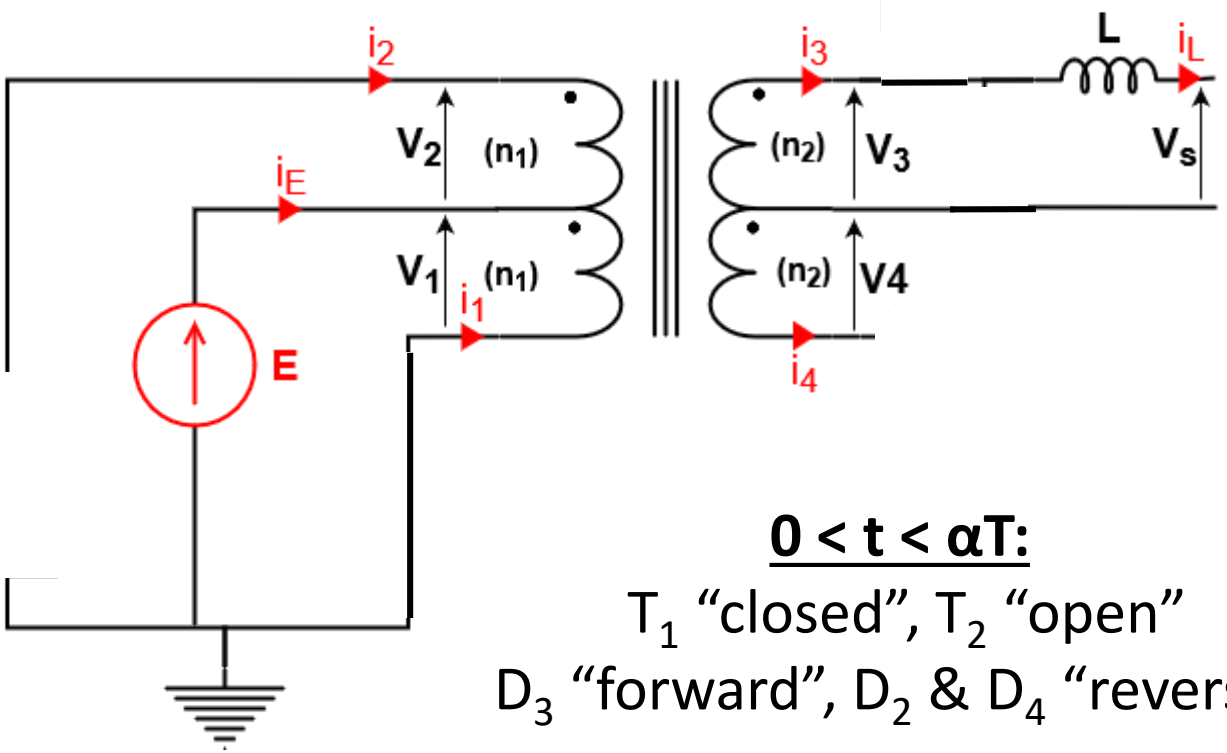

0 < t < αT:

T_1 "closed", T_2 "open"

D_3 "forward", D_2 & D_4 "reverse"

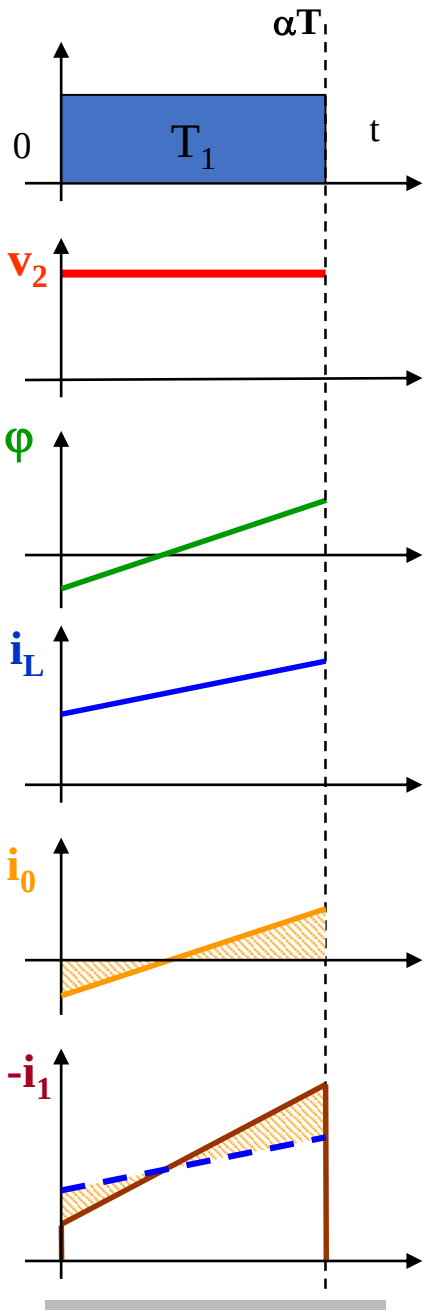

- $v_1 = n_1 . \frac{d\varphi}{dt} = E > 0$

Magnetization

$$-n_1 . i_1 - n_2 . i_3 = \mathcal{R} . \varphi$$

$$i_1 = -\frac{\mathcal{R}}{n_1} . \varphi - \frac{n_2}{n_1} . i_3 = -i_0 - \frac{n_2}{n_1} . i_L$$

Continuous mode study: second phase

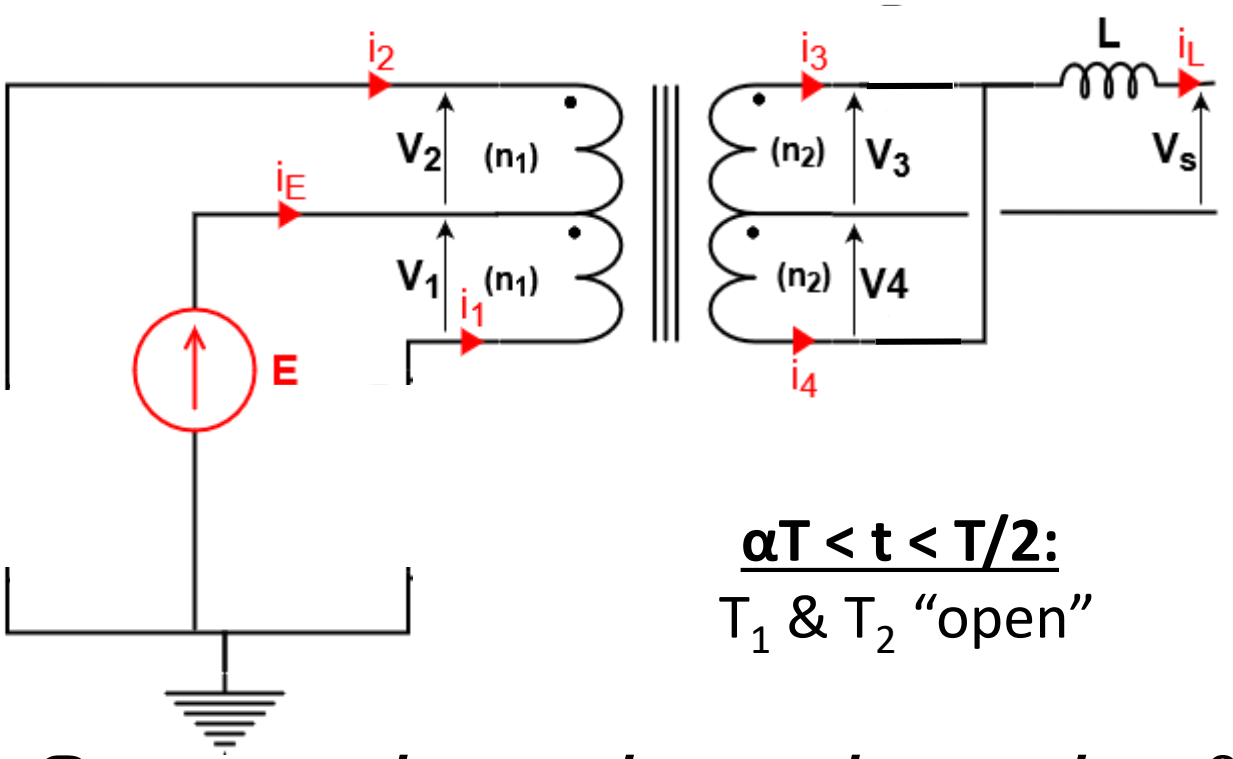

αT < t < T/2:

T_1 & T_2 "open"

$$\mathcal{R}.\varphi = -n_1.i_1 + n_1.i_2 - n_2.i_3 + n_2.i_4 > 0$$

- If D_2 « forward » → D_4 « forward »

$$\mathcal{R}.\varphi = n_1.i_2 + n_2.i_L$$ → **D_2 "reverse"**

$$\mathcal{R}.\varphi = -n_2.i_3 + n_2.i_4 > 0$$ → **D_3 & D_4 "forward"**

$$v_2 = v_3 = v_4 = 0$$ → $\varphi = cst$

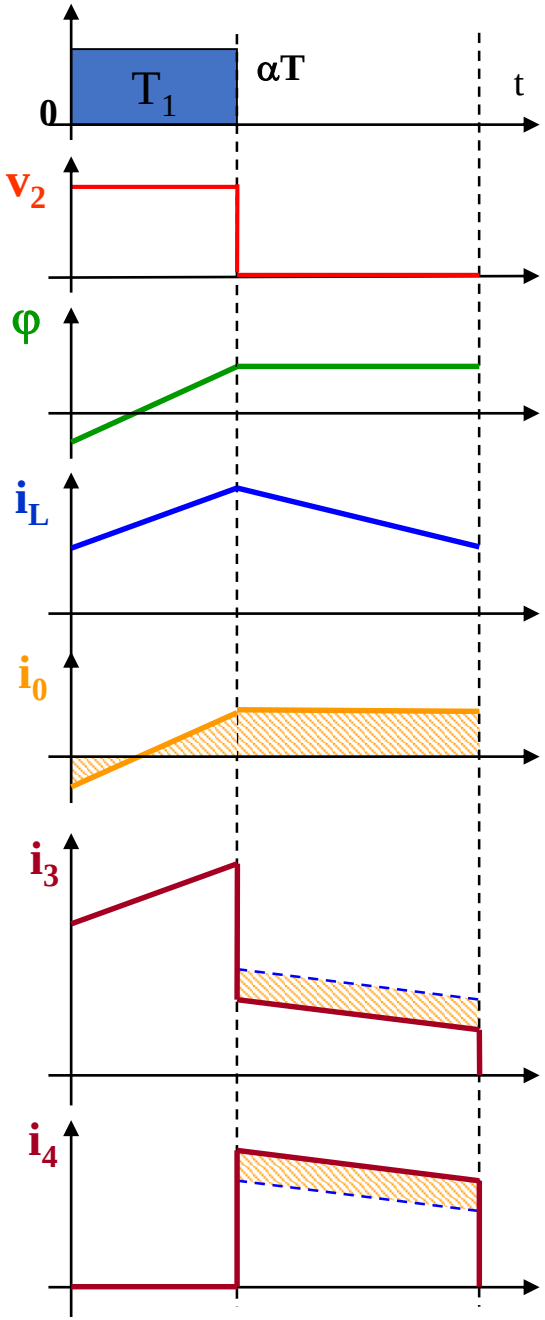

Continuous mode study: demagnetization

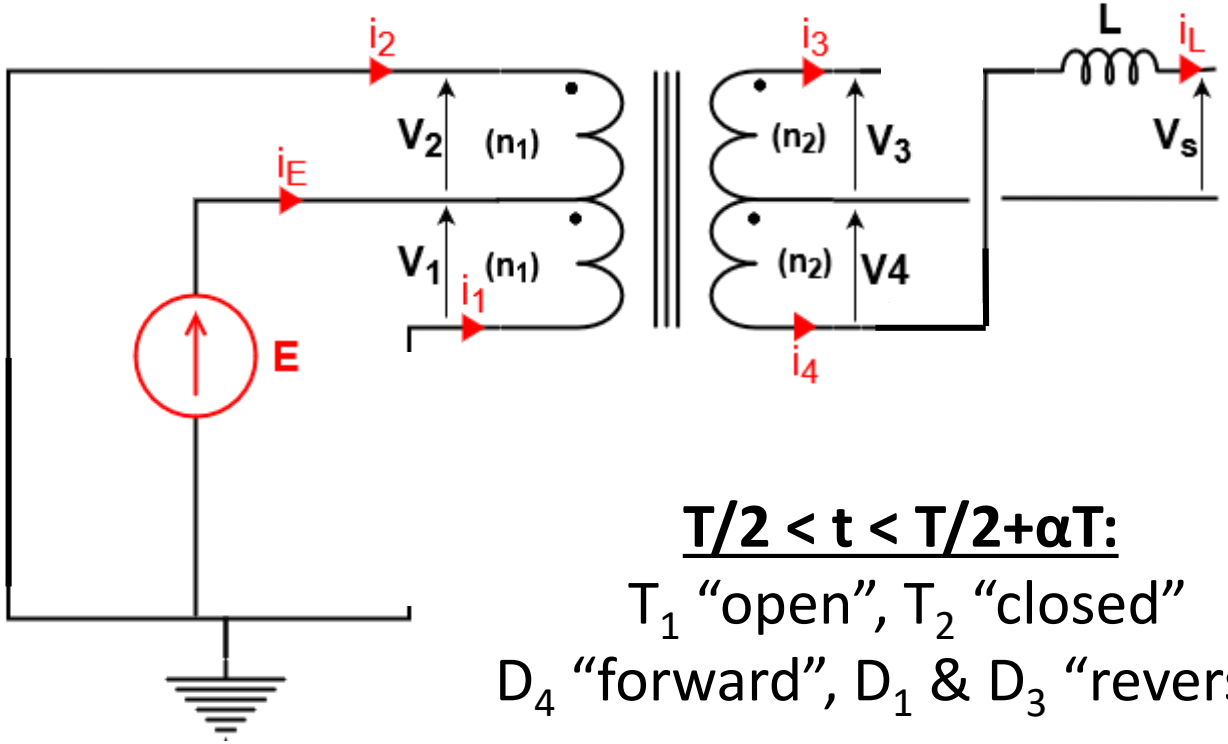

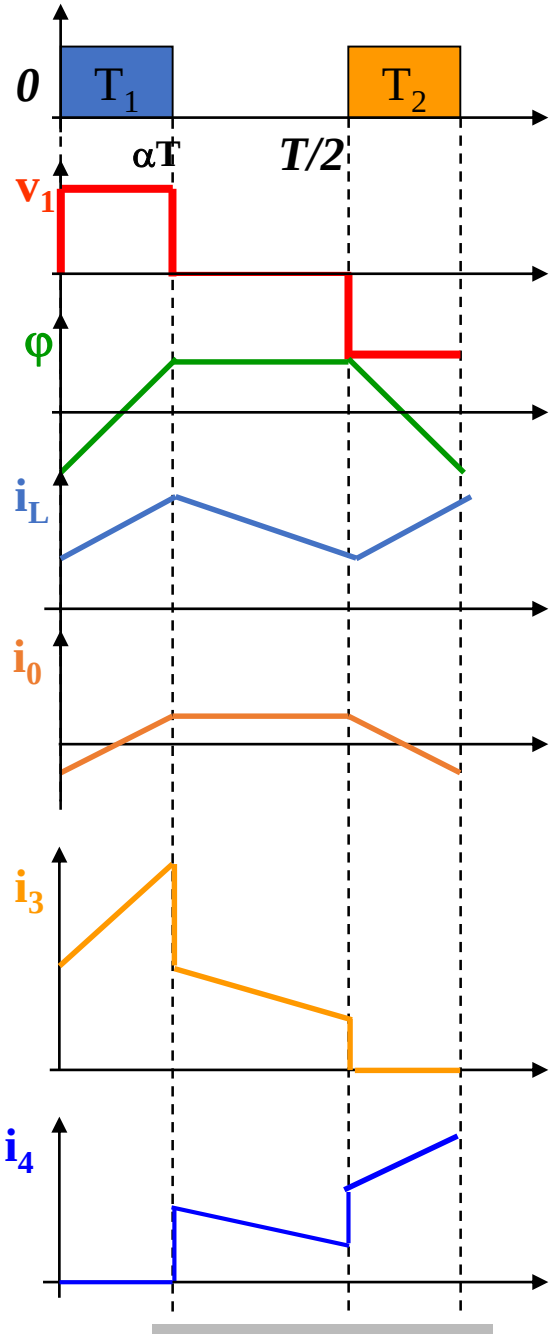

T/2 < t < T/2+αT:

T_1 "open", T_2 "closed"

D_4 "forward", D_1 & D_3 "reverse"

- $v_2 = n_1 . \frac{d\varphi}{dt} = -E < 0$ Demagnetization

$$\boldsymbol{n_1 . i_2 + n_2 . i_4 = \mathcal{R} . \varphi}$$

$$\boldsymbol{i_2 = \frac{\mathcal{R}}{n_1} . \varphi - \frac{n_2}{n_1} . i_4 = i_0 - \frac{n_2}{n_1} . i_L}$$

Continuous mode study: fourth phase

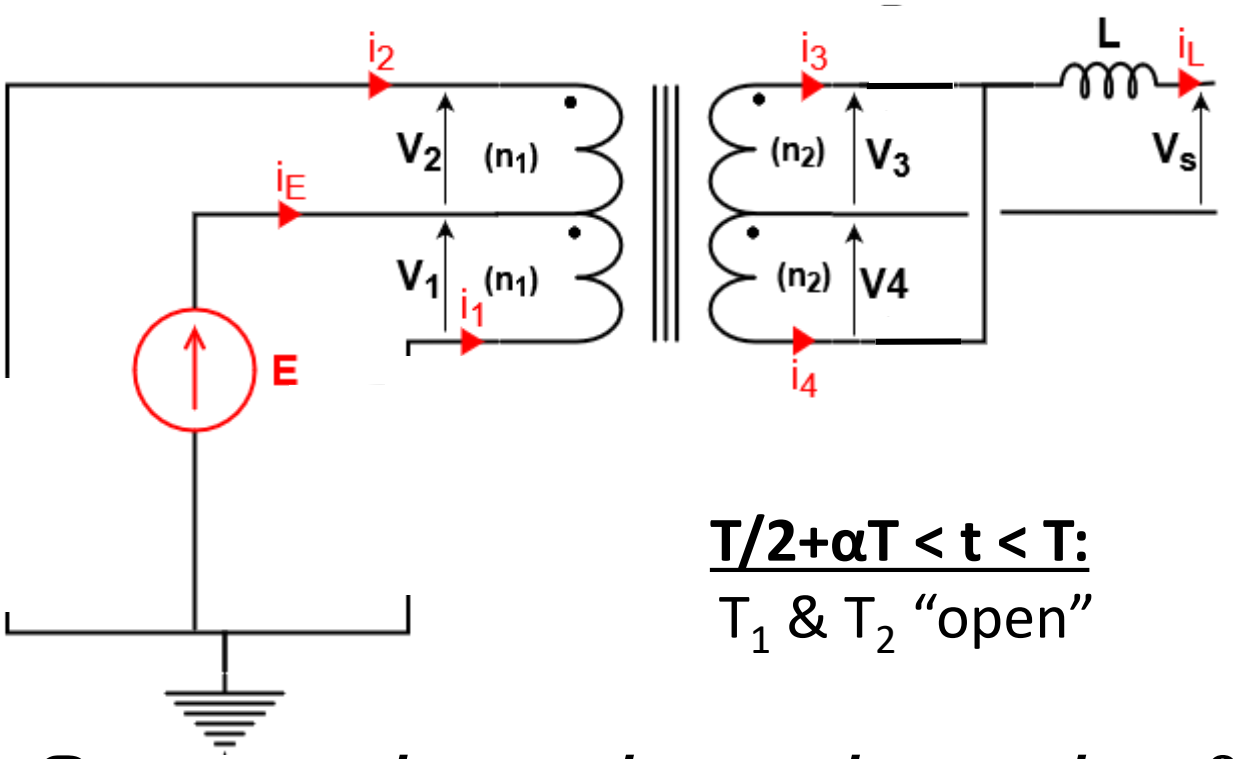

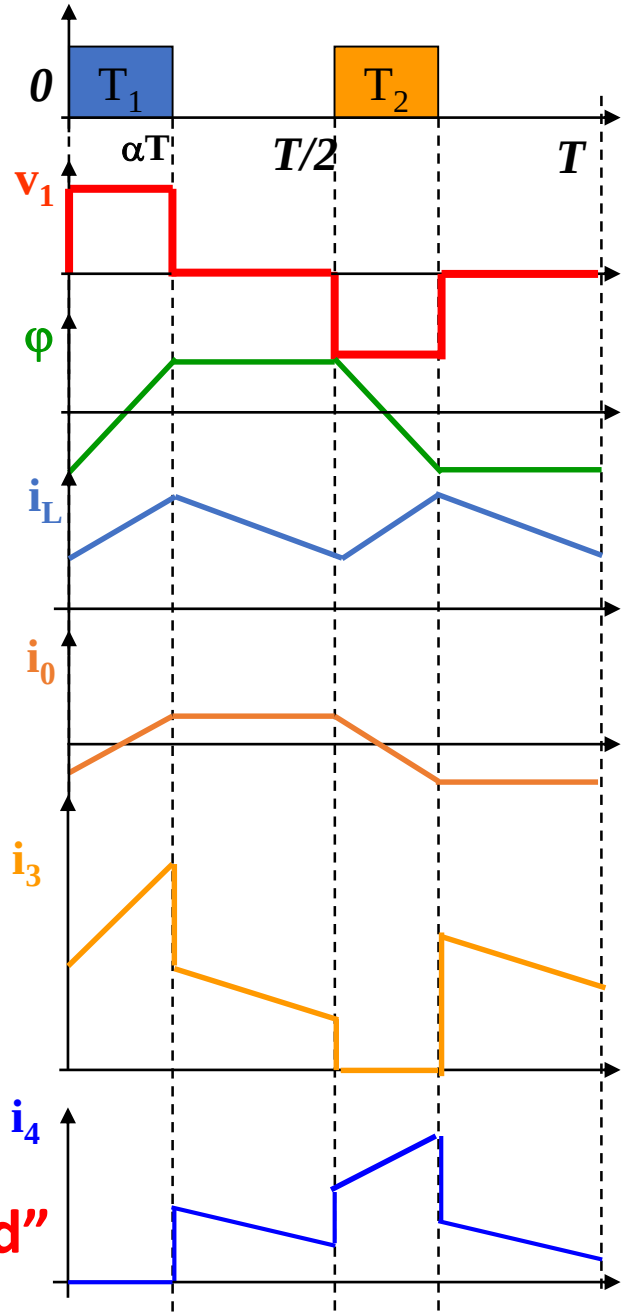

T/2+αT < t < T:

T_1 & T_2 "open"

$$\mathcal{R}.\varphi = -n_1.i_1 + n_1.i_2 - n_2.i_3 + n_2.i_4 < 0$$

- If D_1 « forward »

$$\mathcal{R}.\varphi = -n_1.i_1 - n_2.i_L$$

$$\mathcal{R}.\varphi = -n_2.i_3 + n_2.i_4 < 0$$

$$v_2 = v_3 = v_4 = 0$$

→ **D_1 "reverse"**

→ **D_3 & D_4 "forward"**

→ $\varphi = cst$

Continuous mode study: chronograms

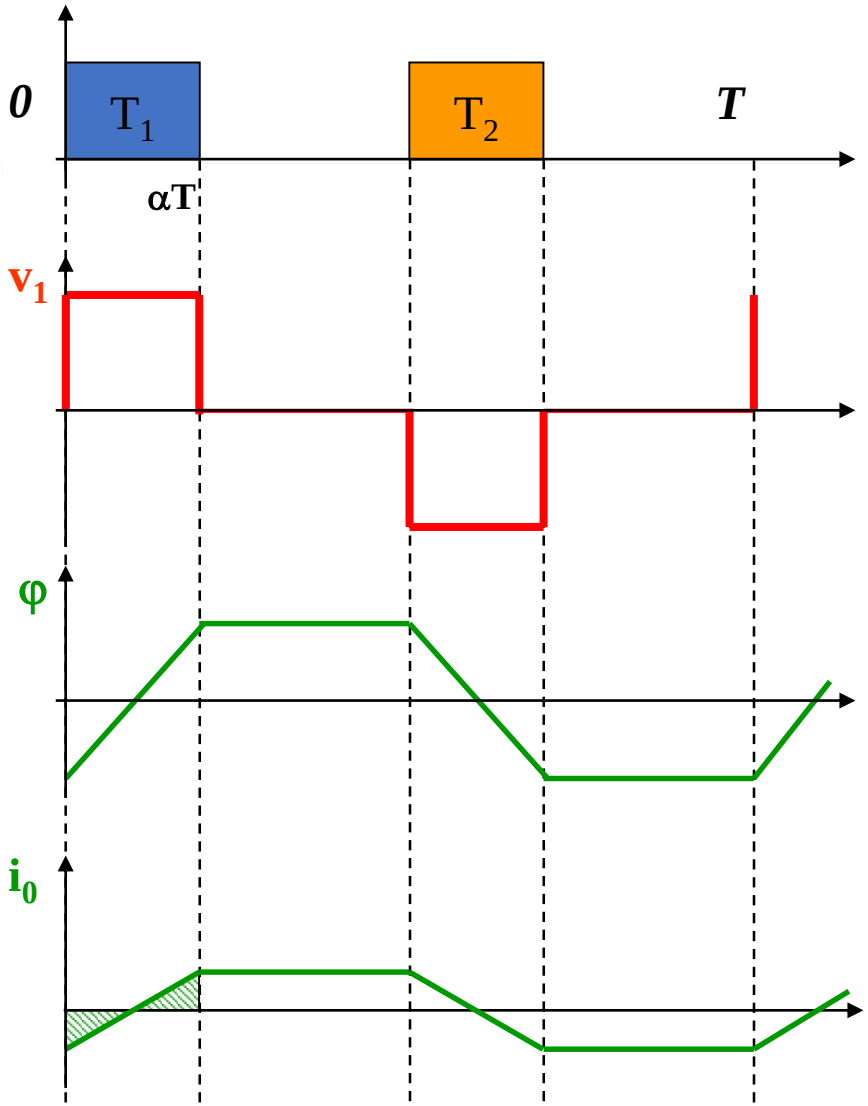

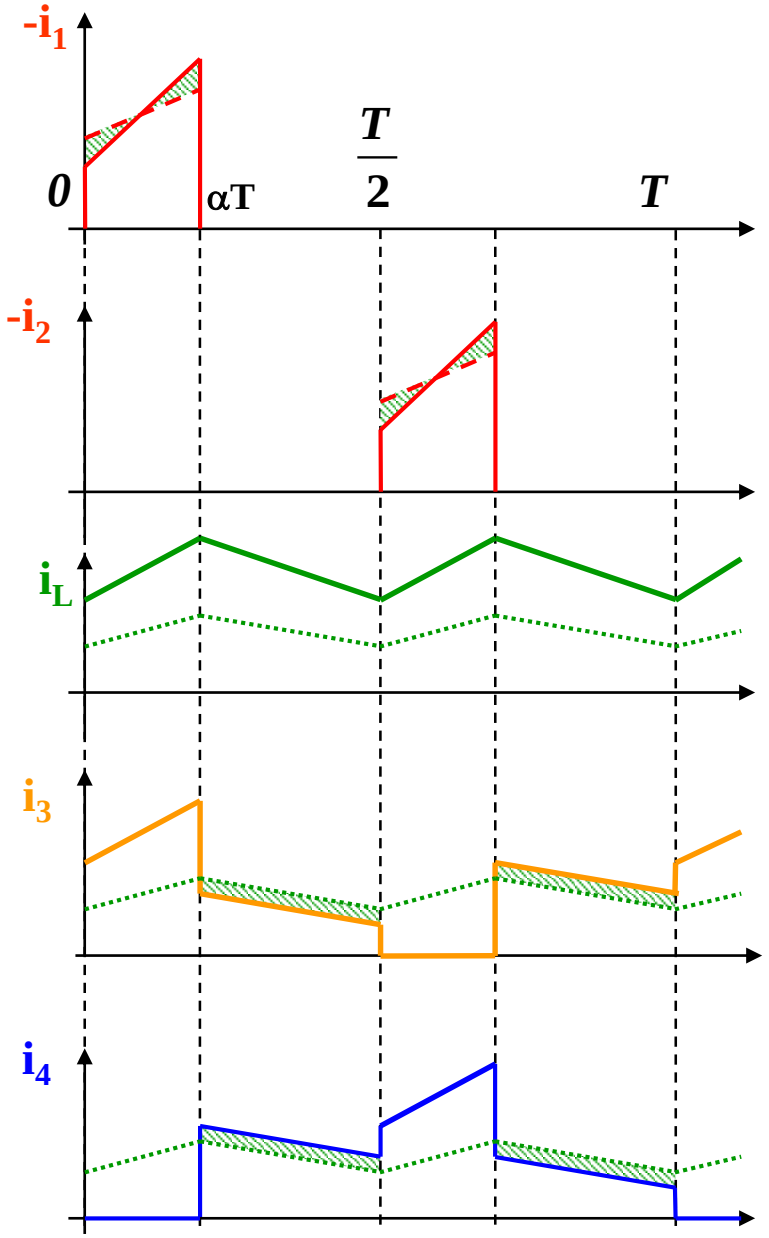

Other symmetrical structures : Half Bridge Forward

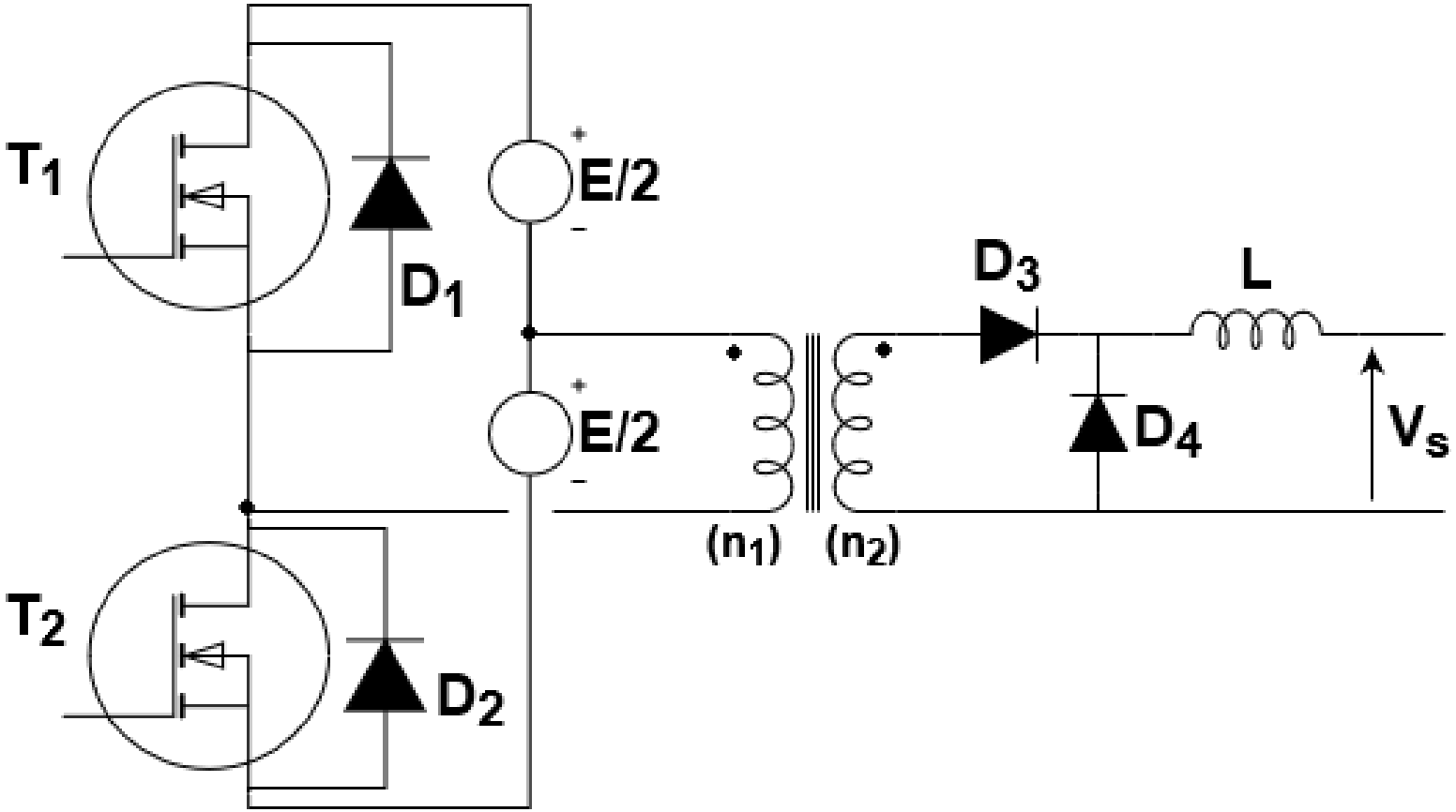

- Same behavior as Push-Pull
- Only on primary and secondary winding
- Transformer simpler (so cheaper)

Other symmetrical structures: Full Bridge Forward

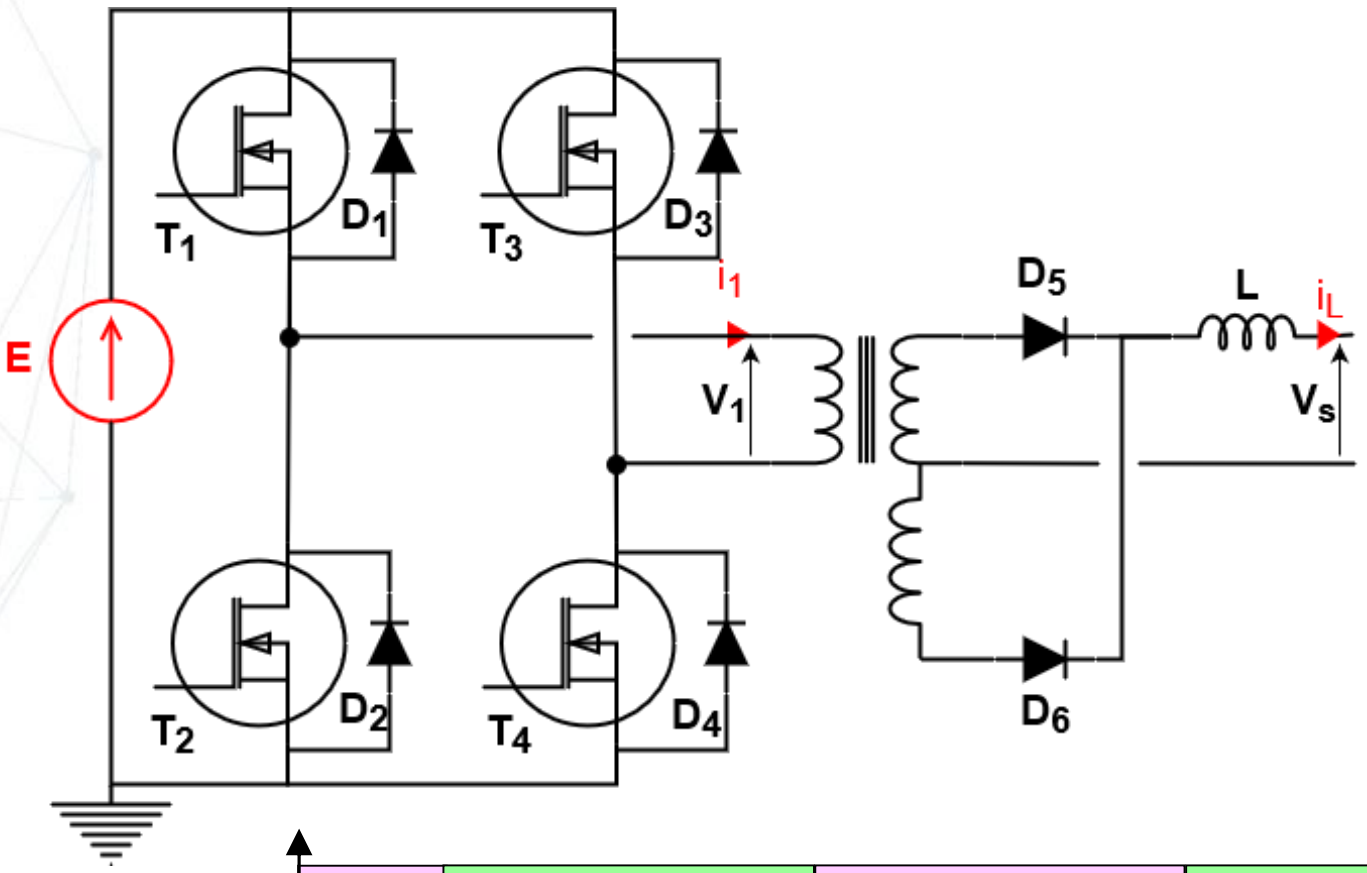
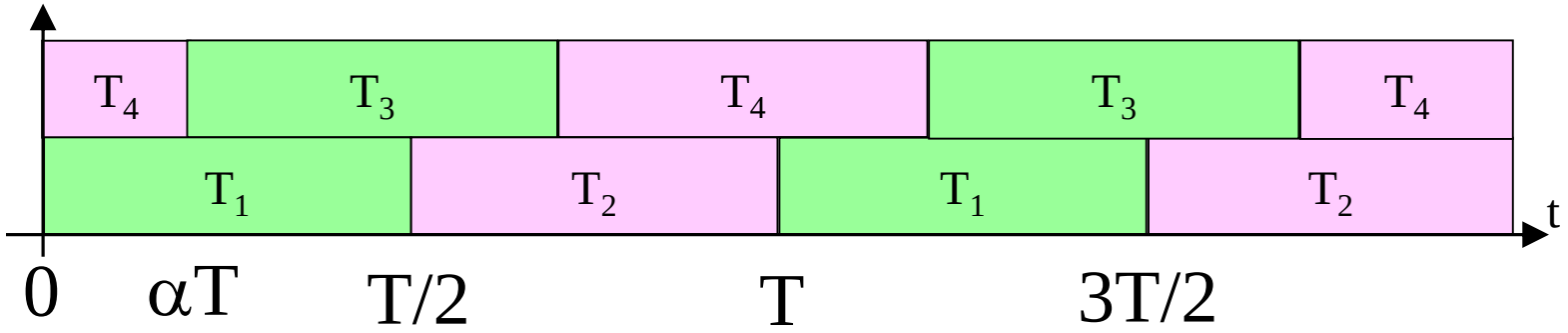
- Same behavior with no-load and full load
- Control with the shift between the two arms