ENSEA
Beyond Engineering

Energy Conversion I

alexis.martin@ensea.fr
Desk D216

Layout

- Non isolated choppers
- Switch mode power supplies
- **Power components**
  - Passive components
    - Coil
    - Transformer
    - Capacitor
  - Active components
    - Diodes
    - Transistors

ENSEA
Beyond Engineering

Passive components

Iron core coil

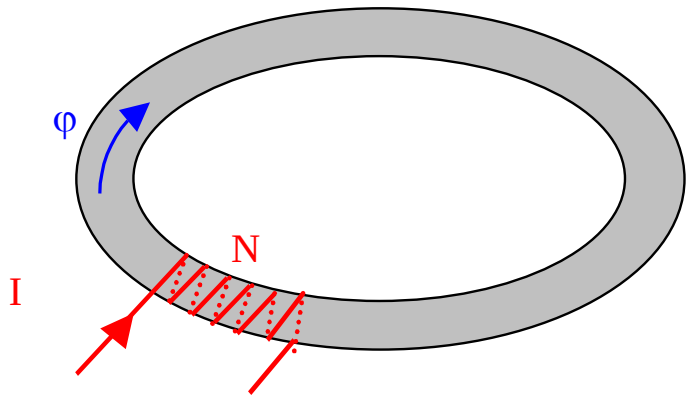

$$\int_{circuit} \mathbf{H}.\mathbf{dl} = N.I$$

$$\mathbf{H} = \frac{\mathbf{B}}{\mu}$$

$$N.I = \left[\int_{circuit} \frac{dl}{\mu.S} \right].\varphi = R.\varphi$$

φ= B.S : elementary flux (real flux)

Φ = N.φ = L.I : "total flux" (sawn by the electrical circuit)

$$\boxed{L_1 = \frac{N^2}{R} = N^2 . A_L}$$

Hysteresis

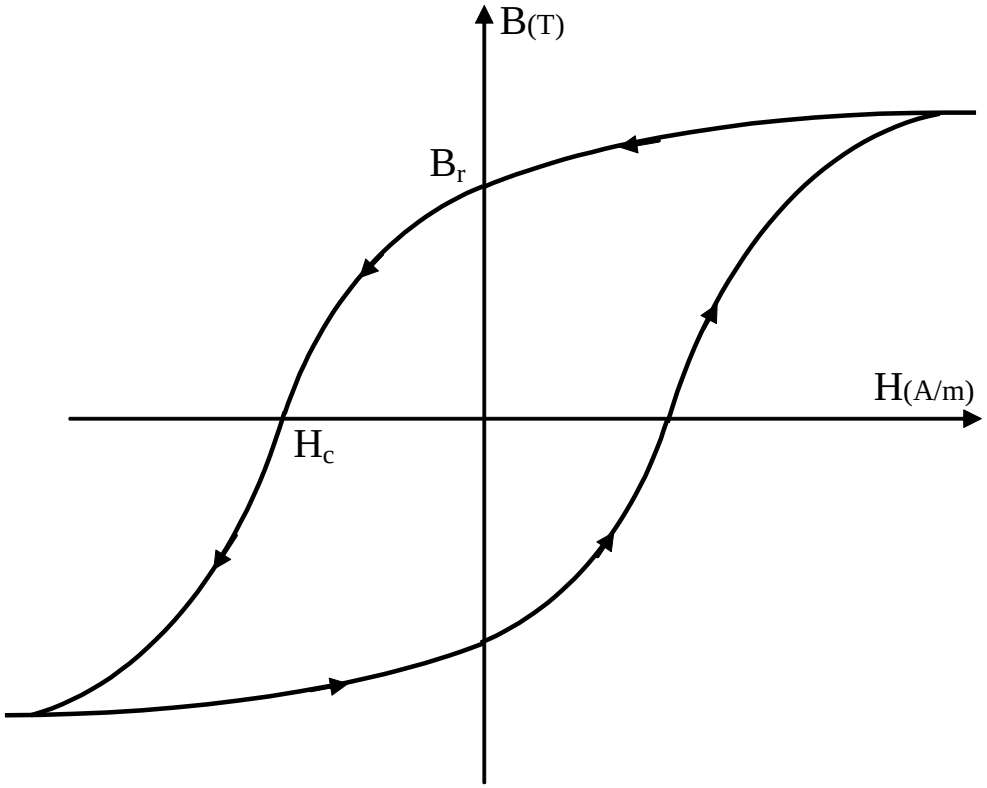

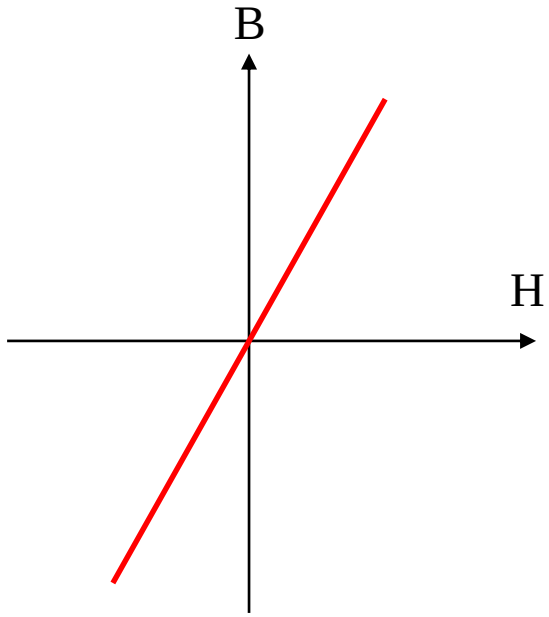

Ideal Characteristic

Stored energy – Air-gap

Magnetic energy density stored

$$\omega_{mag} = \frac{B^2}{2.\mu_0.\mu_r}$$

Example : Ferrinox B52
B = 0,4 T
$\mu = \mu_0.\mu_r = 2{,}5\ 10^{-3}\ H.m^{-1}$

$\omega_{mag} = 32\ J/m^3$

Air-gap : $\mu 0 = 4\pi.10^{-7}\ H.m\text{-}1$

$\omega_{mag} = 65\ kJ/m^3$

Store energy in the air-gap

Magnetic circuit example

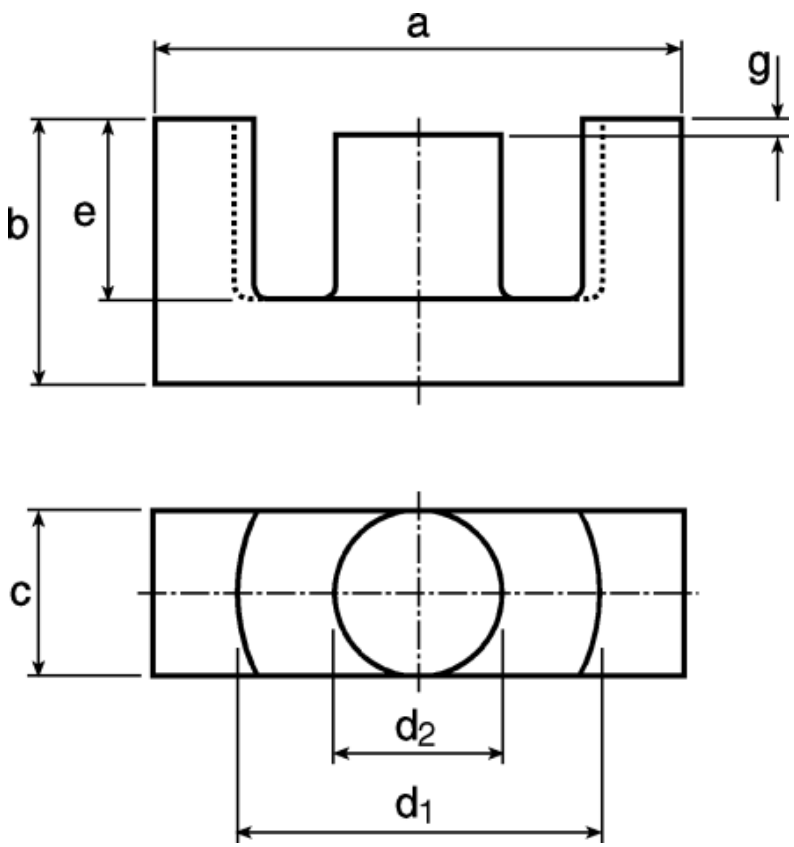

ETD series

With air-gap

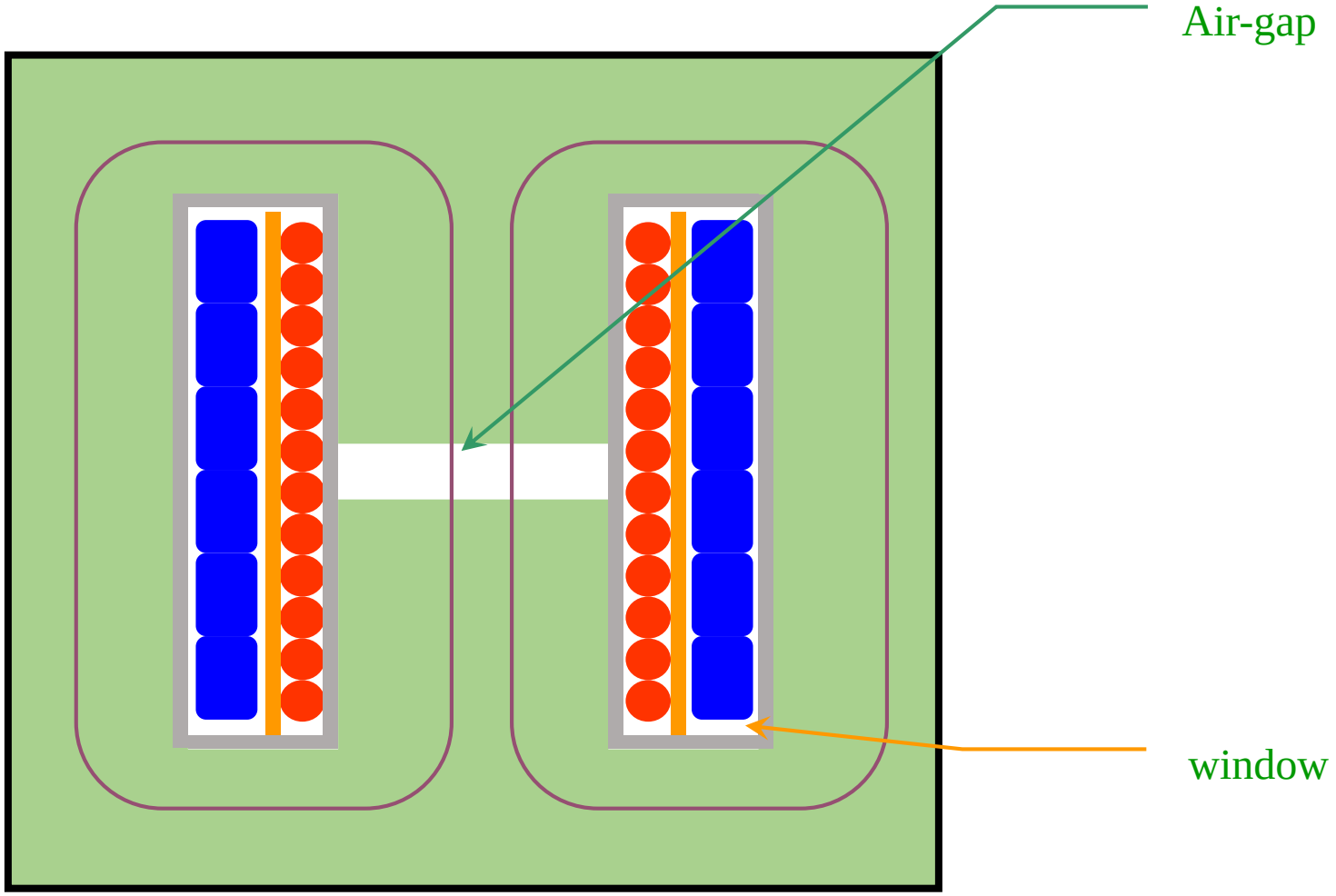

For a Forward : closed core

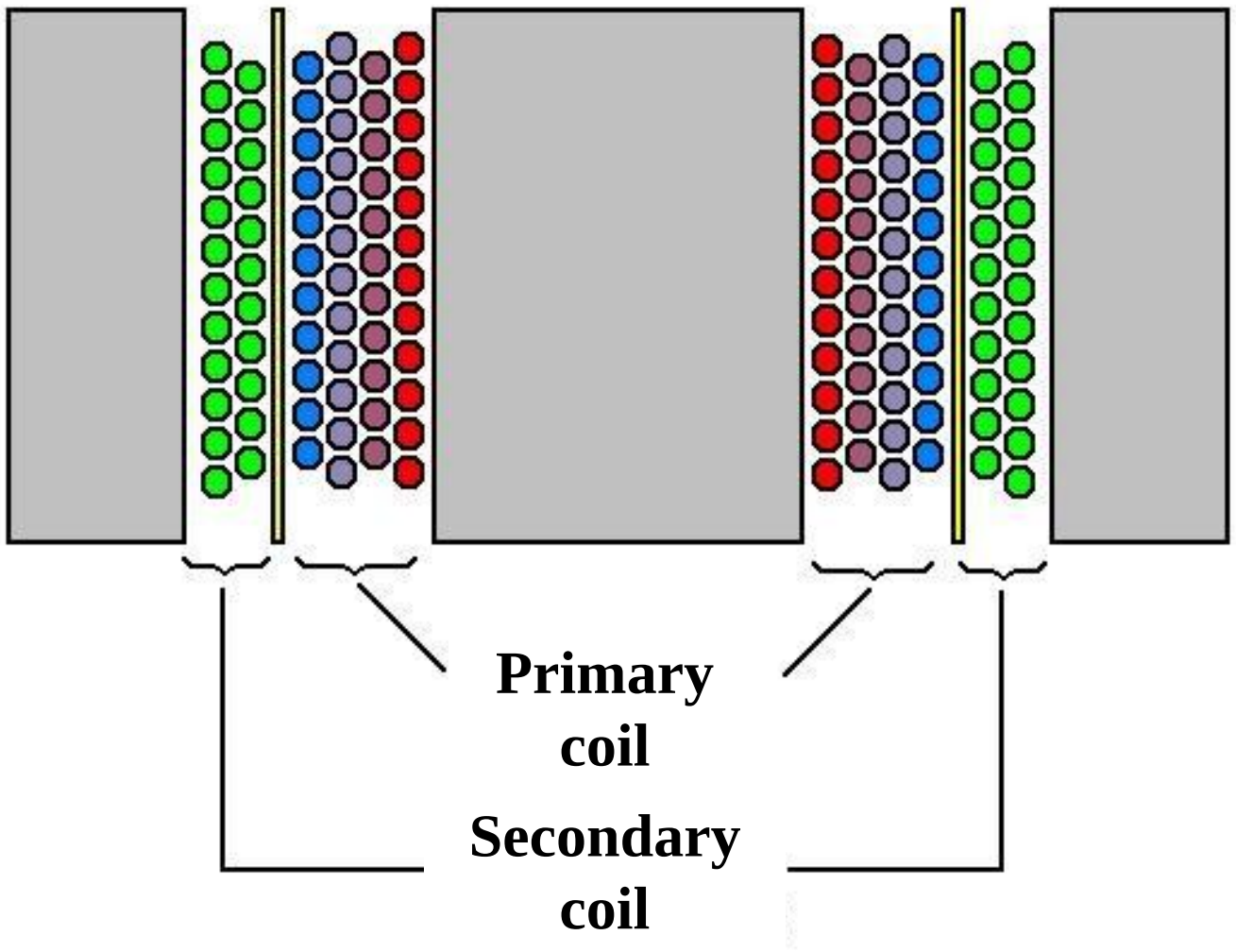

Magnetic pot core

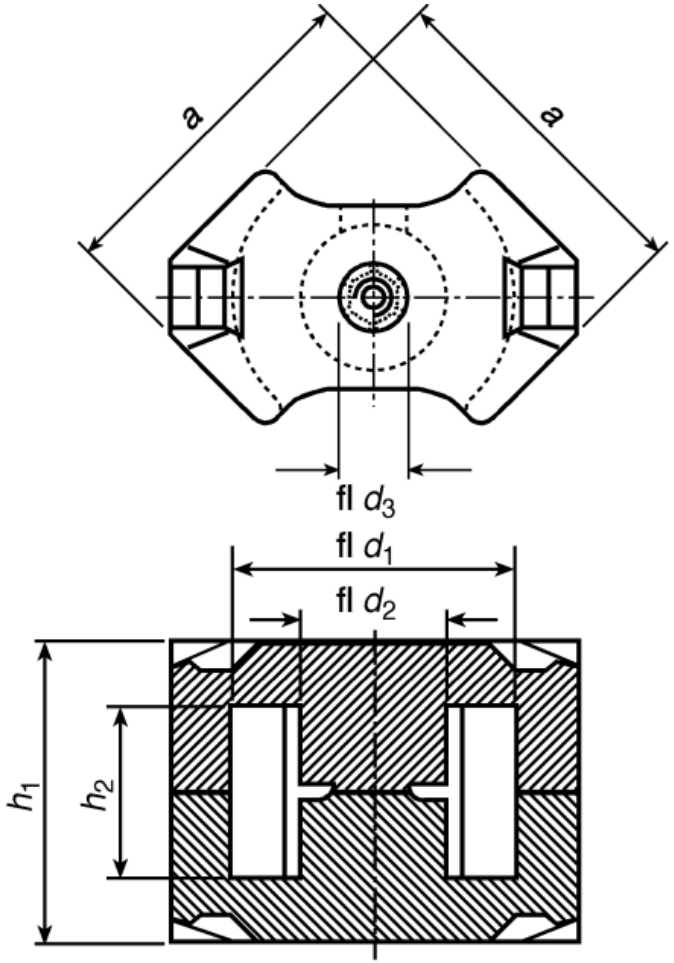

RM- 8- bis RM-14-Kernstze
fr nichtlineare Drosselspulen

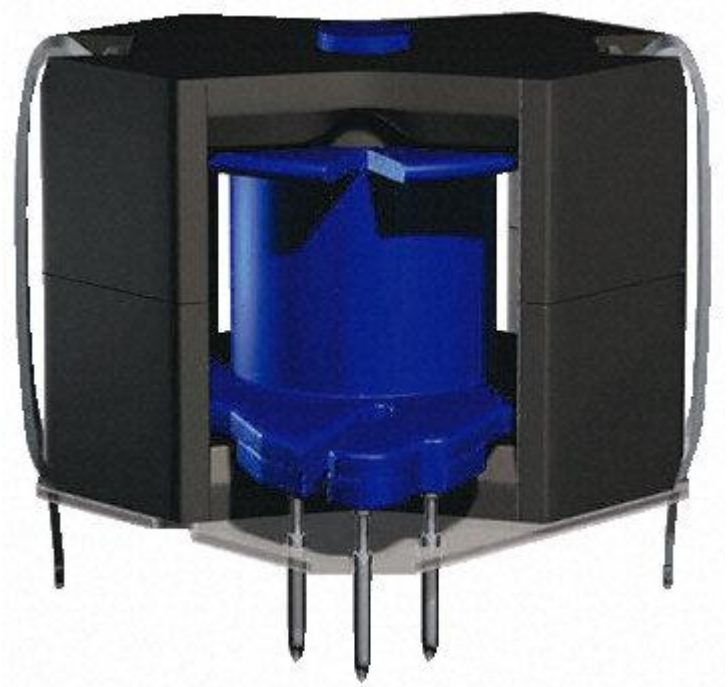

RM series

Torus

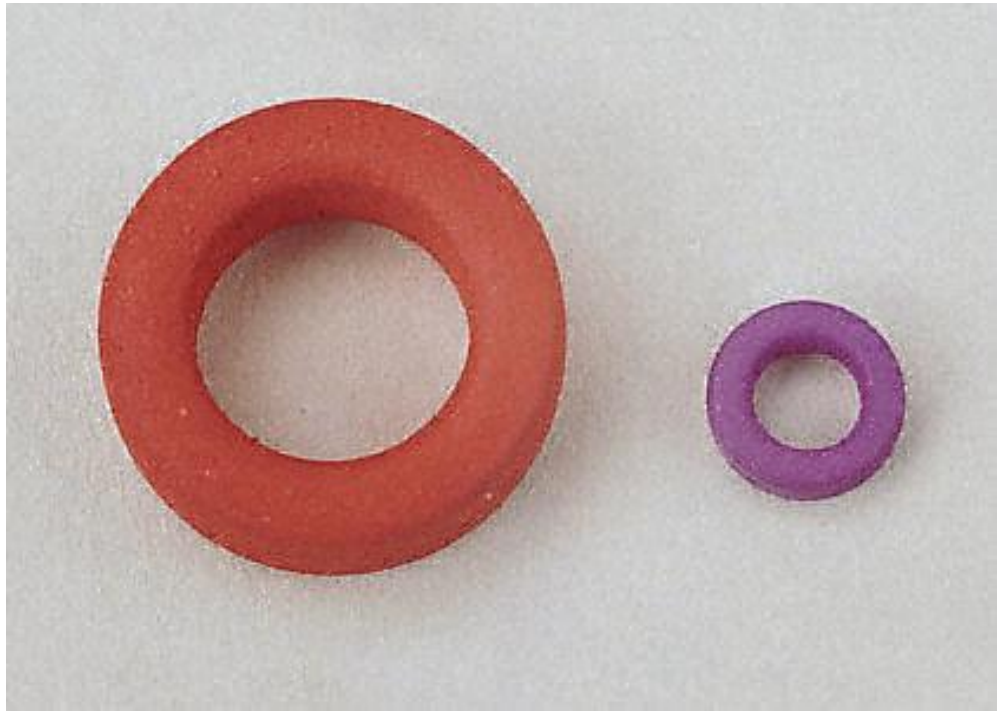

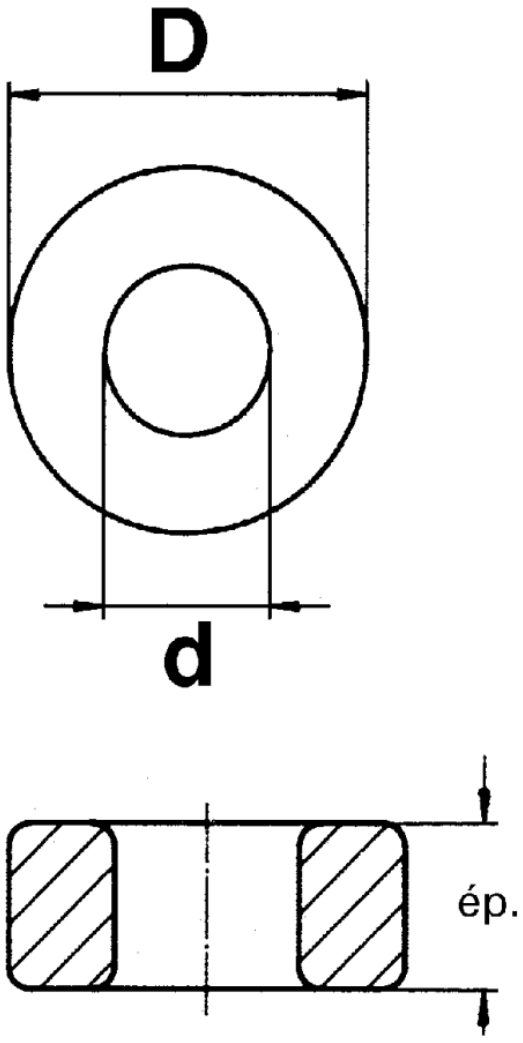

Magnetic circuits parameters

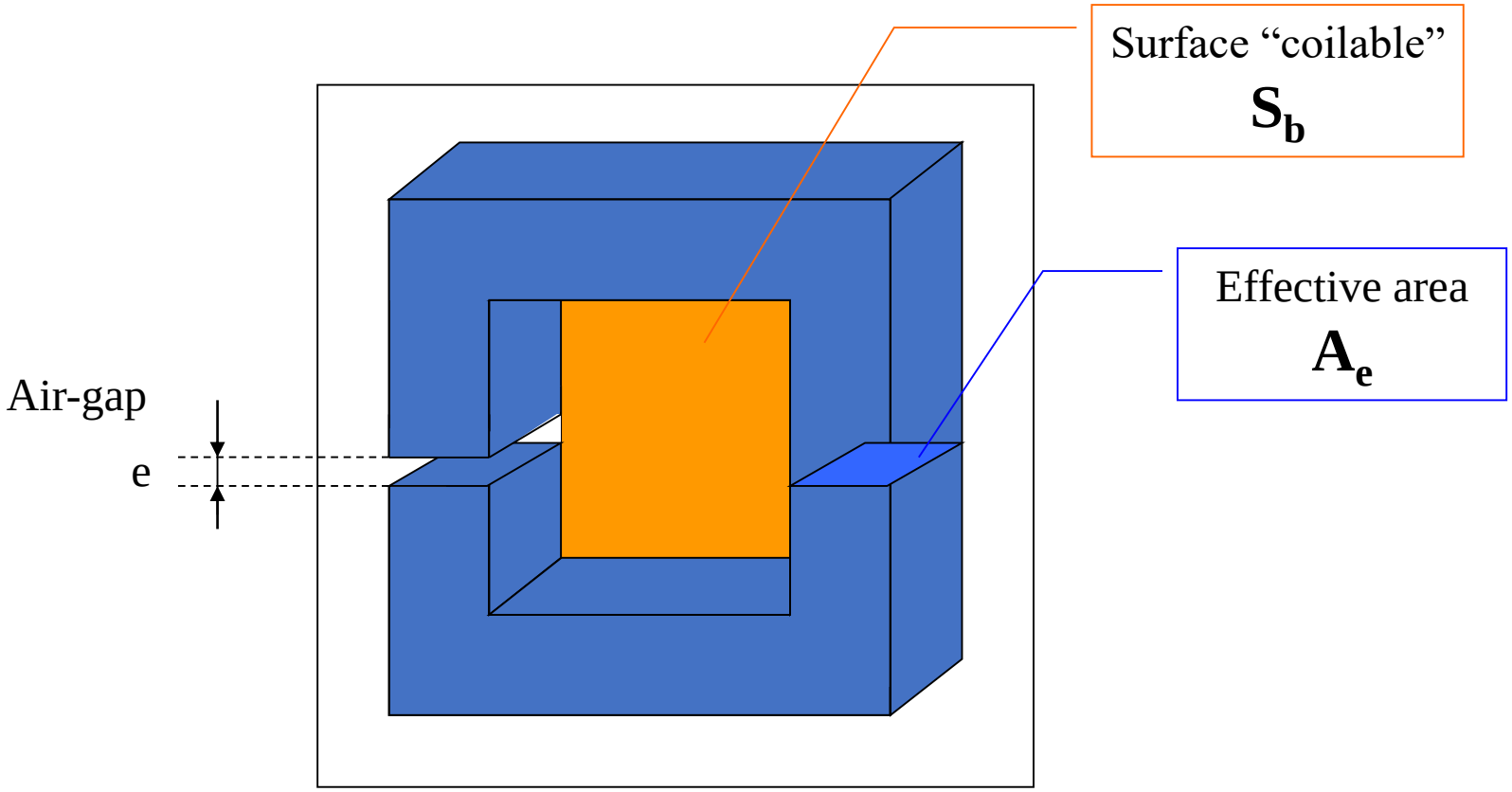

Inductance factor: A_L = Inductance obtained with ONE loop

Critical constraints

Induction in the material: $B < B_{sat}$
0,2 to 0,5 T for classical materials

Current density in the coil: $\delta < \delta_{max}$
5 A/mm² for copper

Sizing : product $A_e.S_b$

Transformer

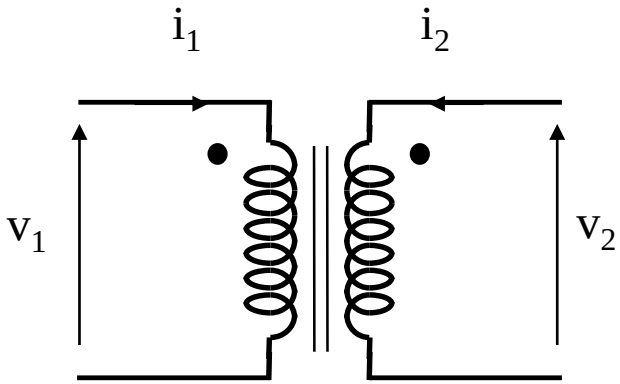

Primary : N_1 turns
Secondary : N_2 turns

$$v_1 = N_1 . \frac{d\varphi}{dt} \qquad v_2 = N_2 . \frac{d\varphi}{dt} \qquad m = \frac{N_2}{N_1} = \frac{v_2}{v_1}$$

Winding direction

$$\oint H.dl = R.\varphi = N_1.i_1 + N_2.i_2$$

Magnetizing current i_{10} : Hopkinson's law $\quad R.\varphi = N_1.i_{10}$

$$\Phi = L_1.i_{10} \qquad L_1 = \frac{N_1^2}{R} \qquad i_1 + m.i_2 = i_{10}$$

$$\boxed{v_1 = L_1 . \frac{di_{10}}{dt}}$$

Transformer : equivalent scheme

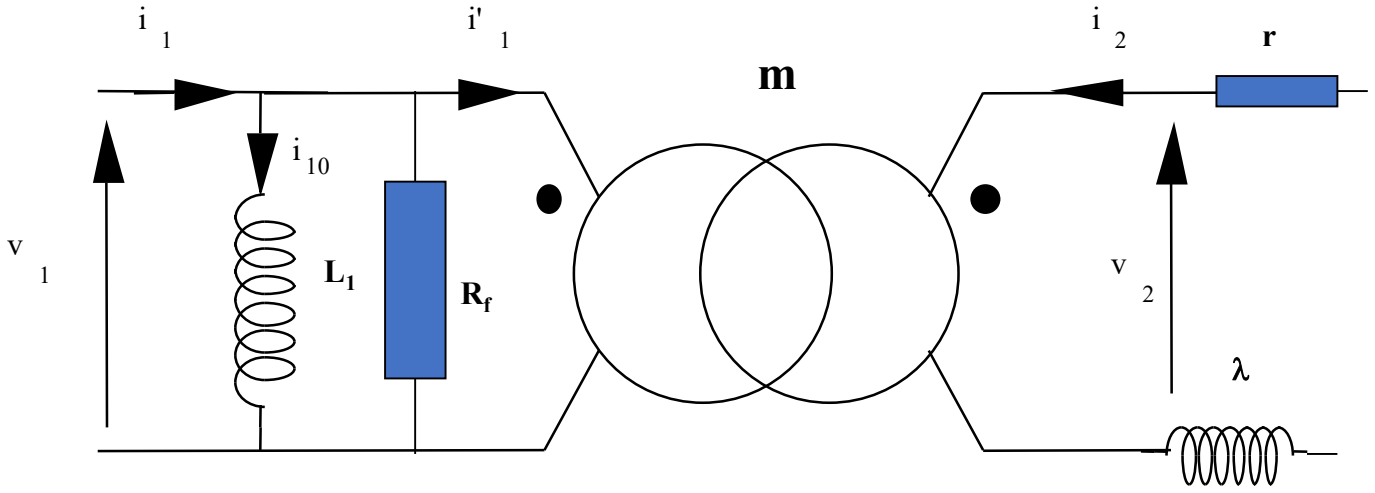

L_1 : Magnetizing inductance (at primary side)
R_f : ferromagnetic losses
r : Joule loss (or ohmic loss)
λ : leakage inductance

Skin effect

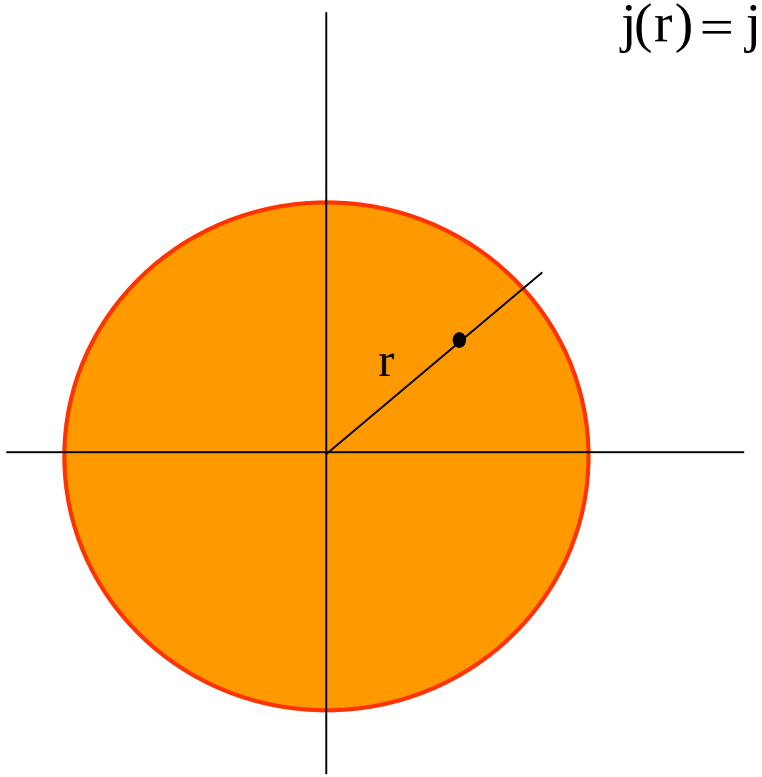

$$j(r) = j.\,J_0\left(e^{i\pi\frac{r}{\delta}}\right).$$

$$\delta = \frac{1}{\sqrt{\pi.\sigma.\mu.f}}$$

- δ : skin depth thickness
- σ : conductivity
- μ : permeability
- f : frequency

Skin effect

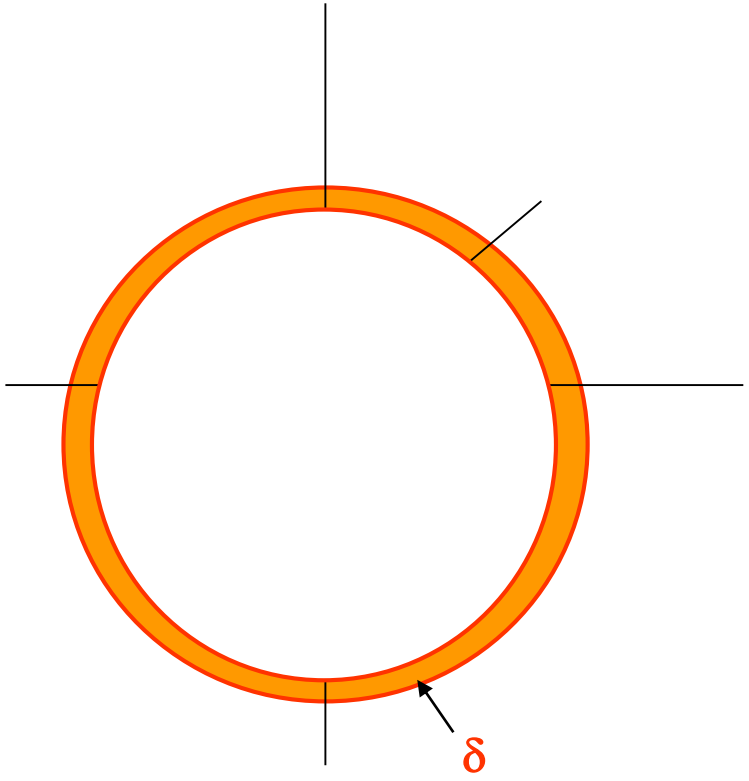

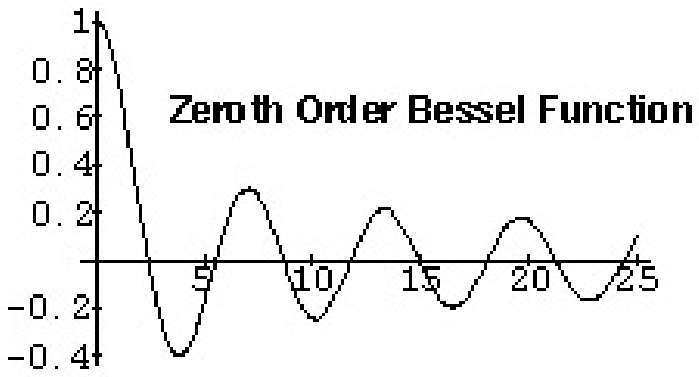

Copper at 25°C

- 50 Hz : δ = 9,4 mm
- 100 kHz : δ = 0,21 mm

=> ***Multi strand wire, Litz wire***

Winding

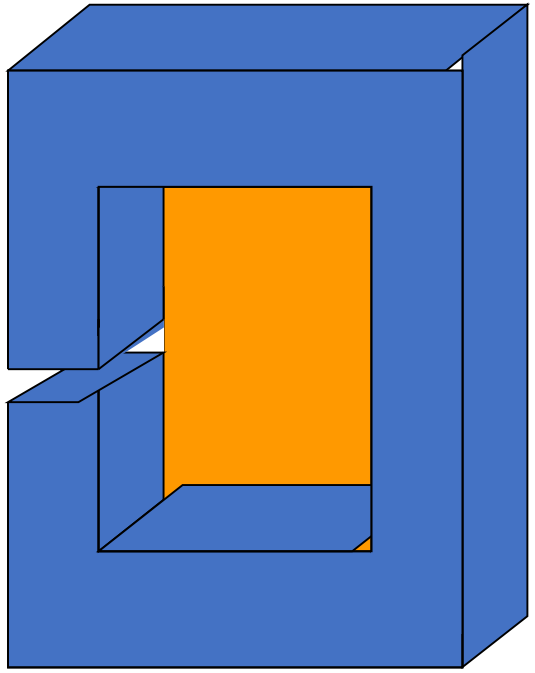

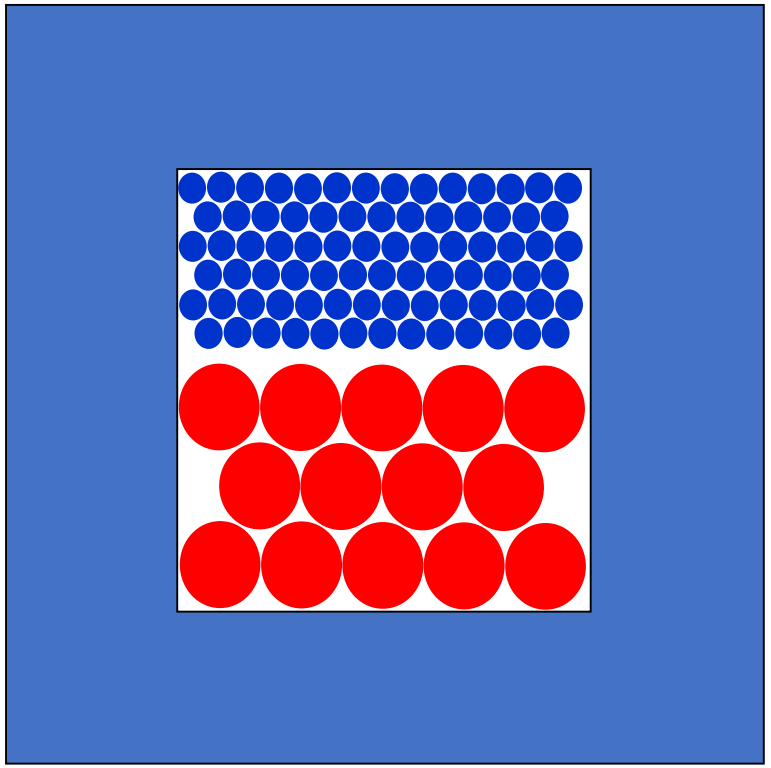

$k_B = 0,7$

Capacitors

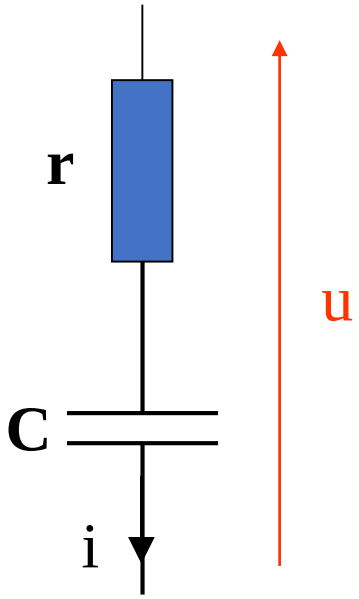

Losses in the capacitor

$$P = r.I_{eff}^2$$

Rated voltage: U_{eff}

r : ESR (Equivalent Series Resistor)

Multiple technologies : depends on the frequency

Capacitors

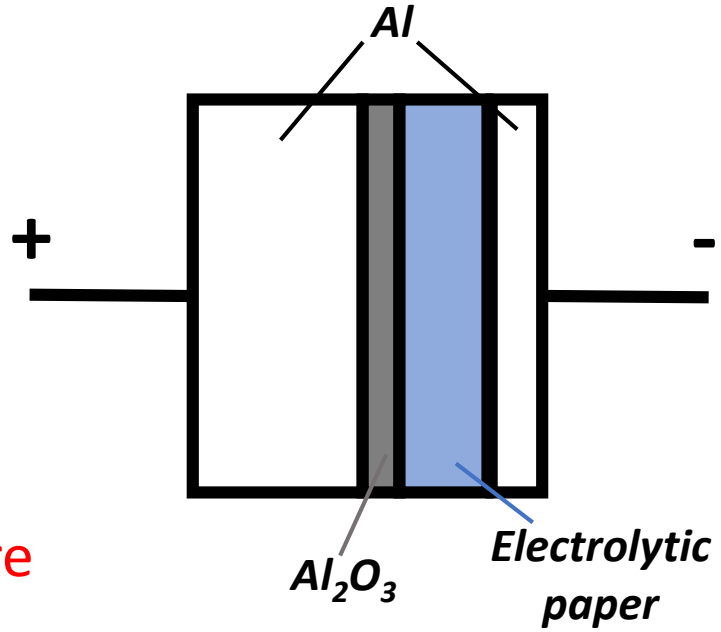

- Electrolytic
  - High voltage
  - Polarized -> DC voltage
  - Lifetime depends on temperature

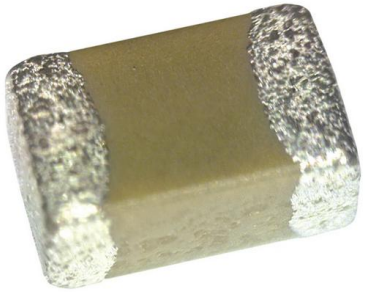

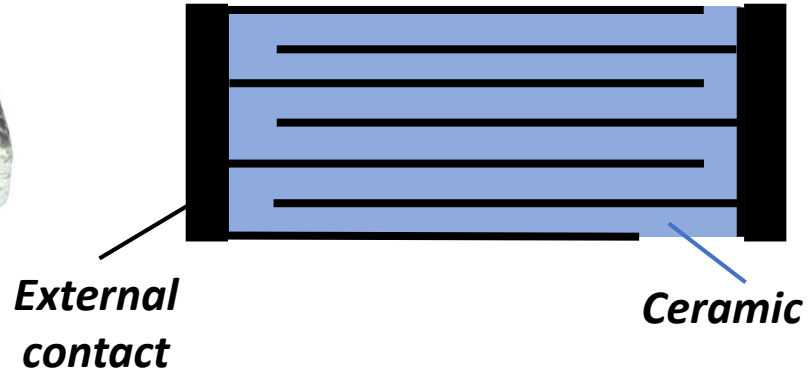

- Ceramic
  - “low” values
  - High frequency

- Films
  - AC
  - Self-healing

Active components

Active components

PN junction

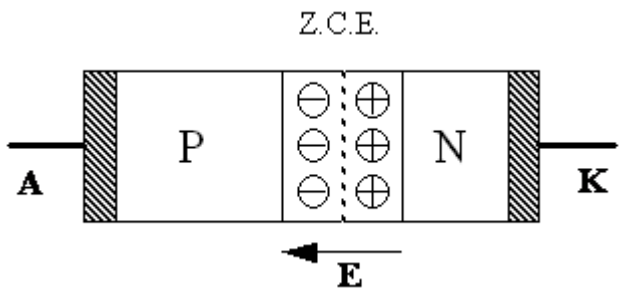

Diode

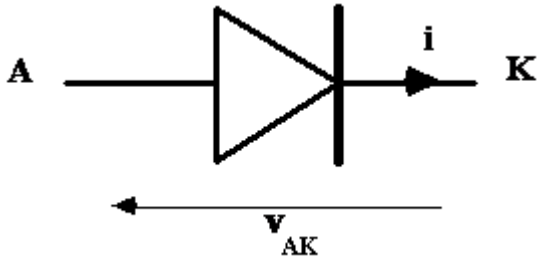

$$i = I_S\left(e^{\frac{q.v_{AK}}{k.T}} - 1\right)$$

Diode : static characteristic

I_0 : Average forward current, or I_F, I_{AV}
I_{FM} : Peak forward current
I_{FSM} : Peak forward surge current
I_{RRM} : Reverse repetitive current

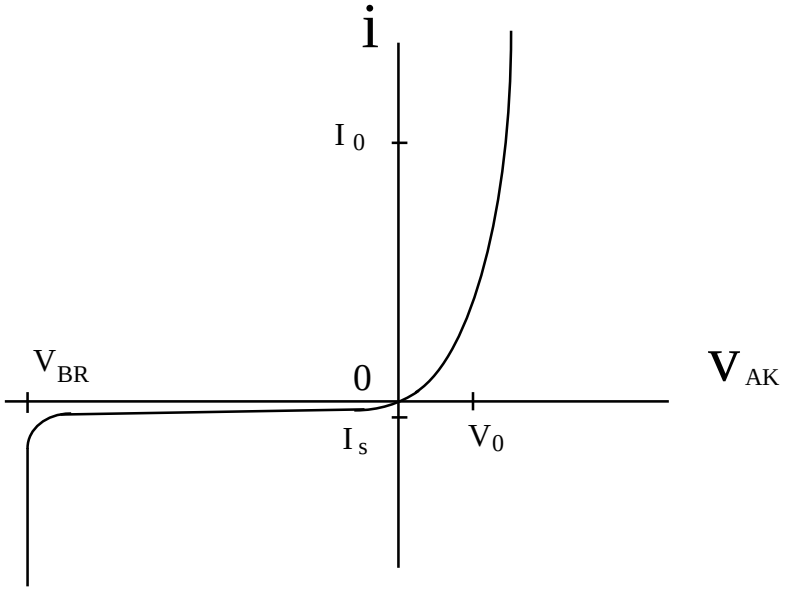

V_0 : Forward voltage or V_{FM}
V_{BR} : Breakdown reverse voltage
V_{RRM} : Peak repetitive reverse voltage

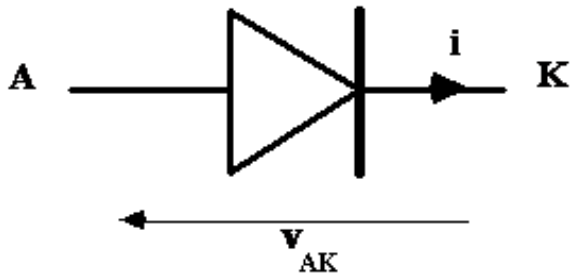

Diode : simplified static characteristics

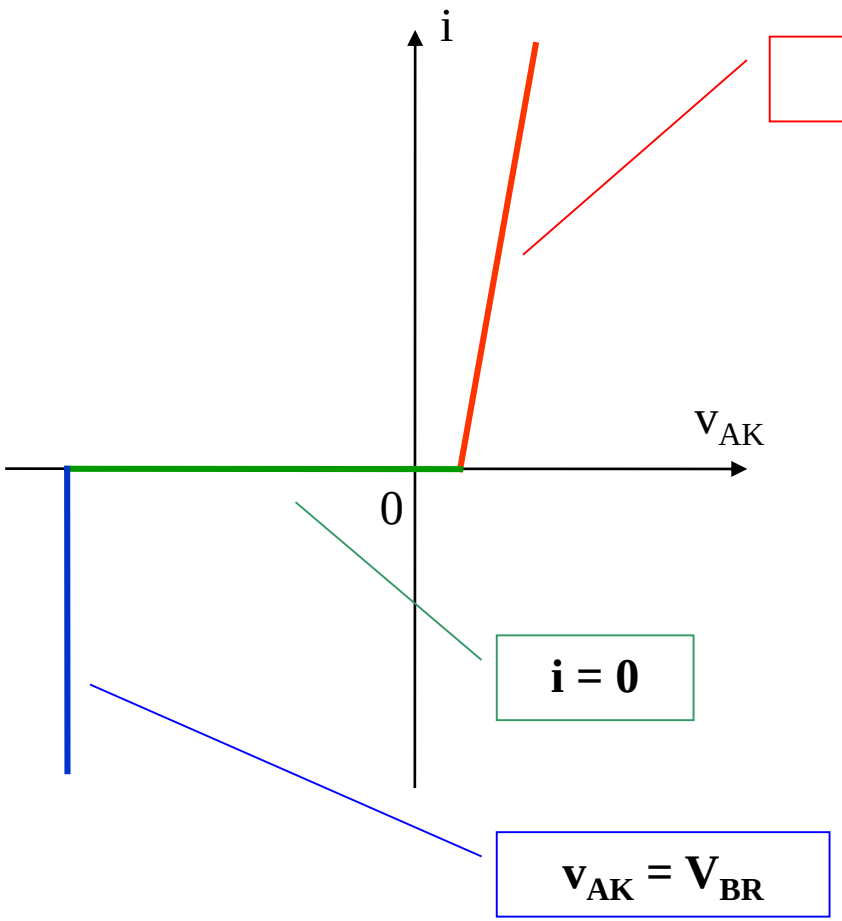

$$V_{AK} = r_{on}.i + V_0$$

Linearized characteristic
3 segments

Conduction loss calculation

$$P_c = r_{on}.I_{eff}^2 + V_0.\ I_{av}$$

Diode on commutation mode: equivalent scheme

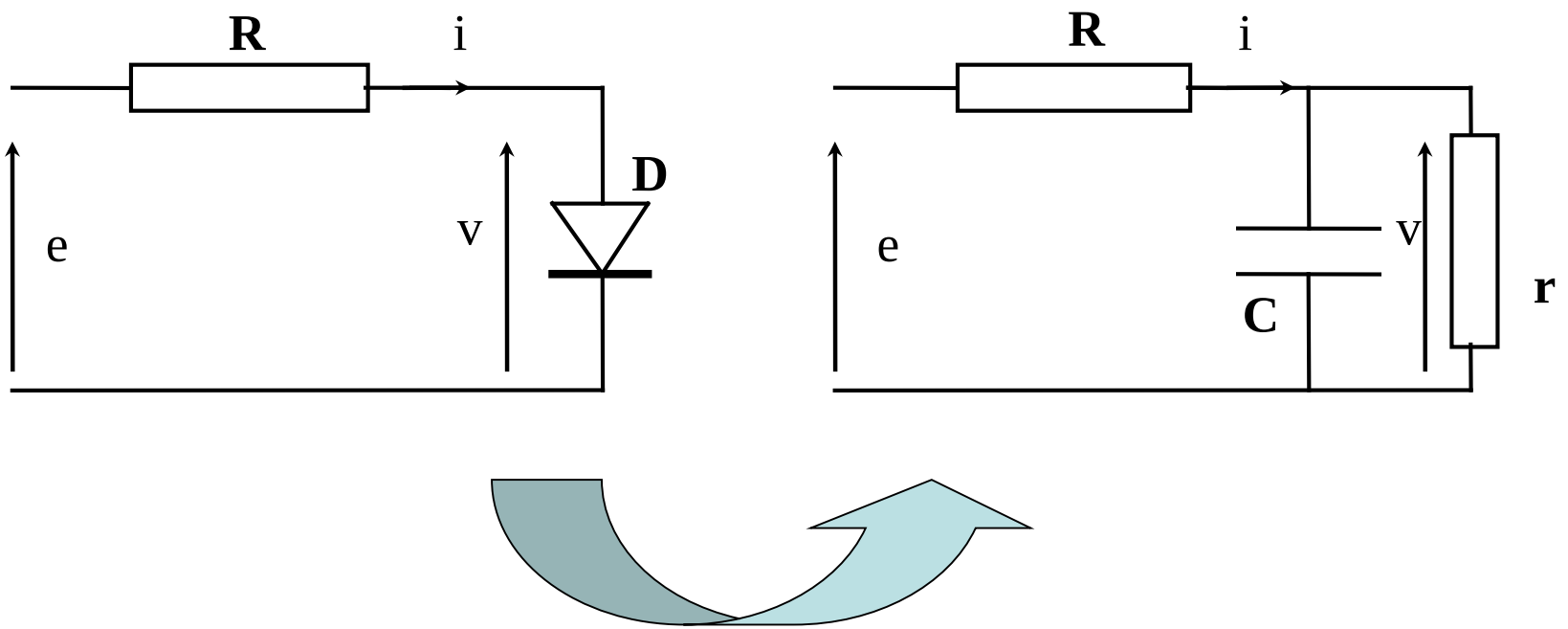

Conduction switch

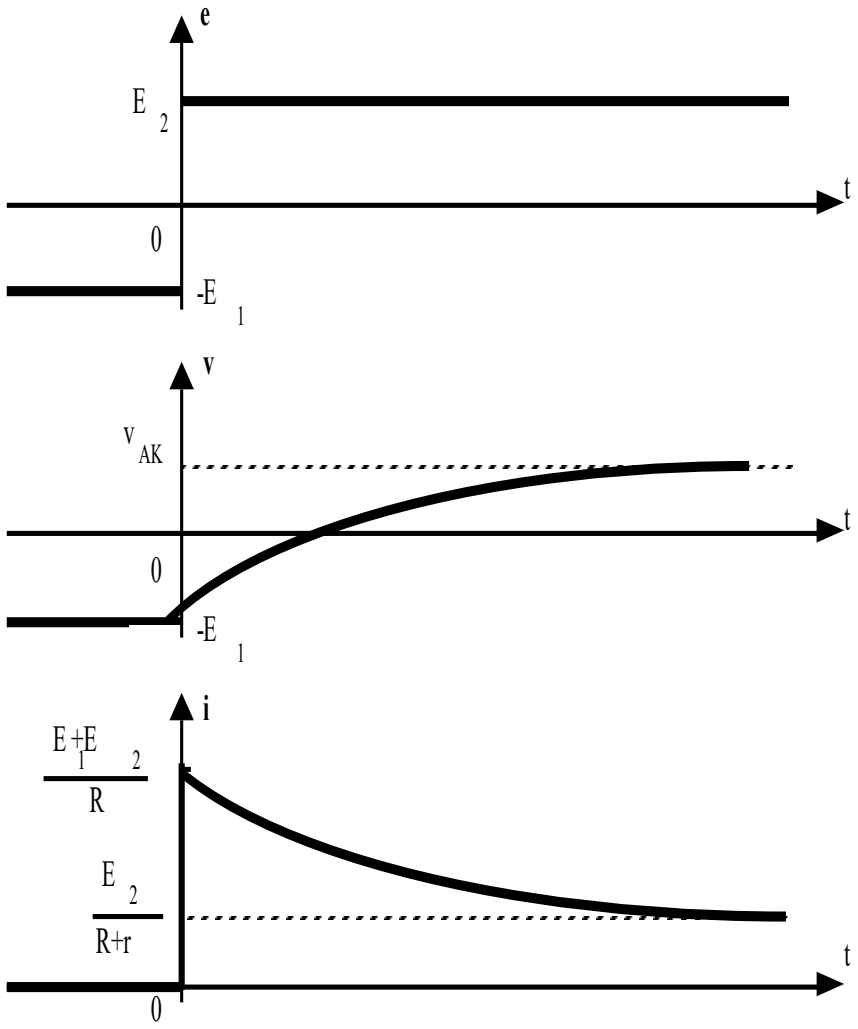

« Ideal » turn off diode with voltage source

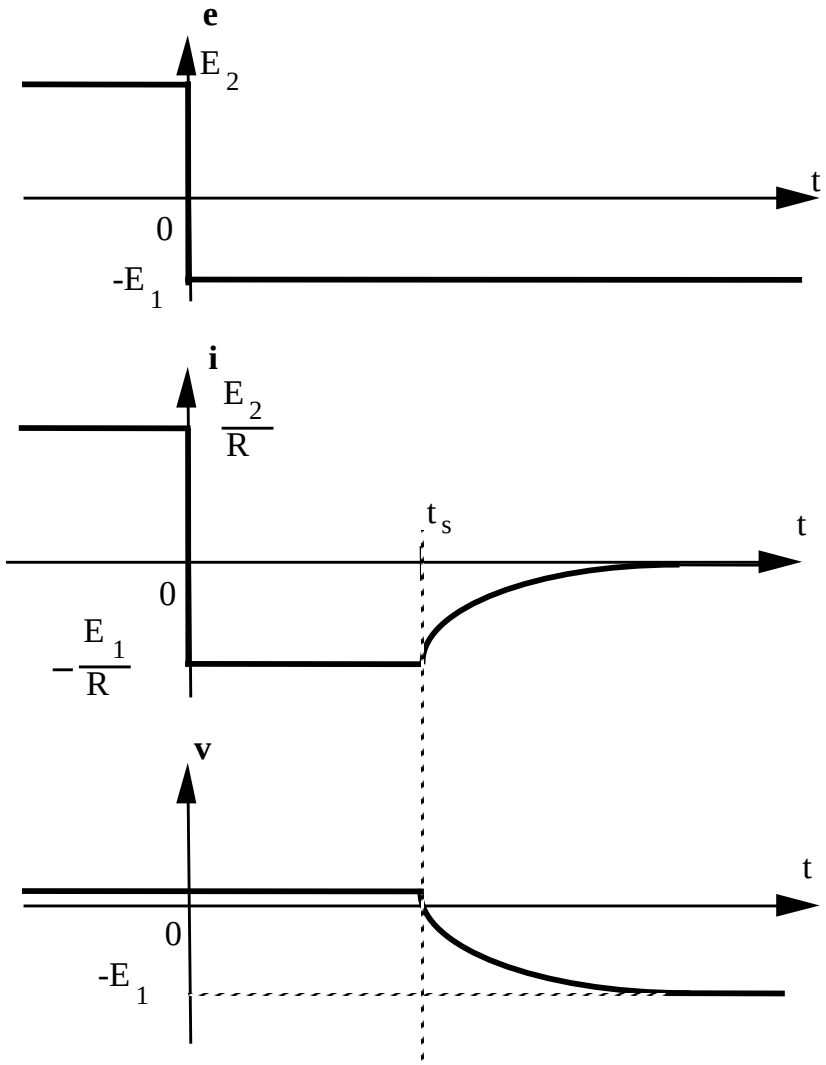

Diode : « real » turn off

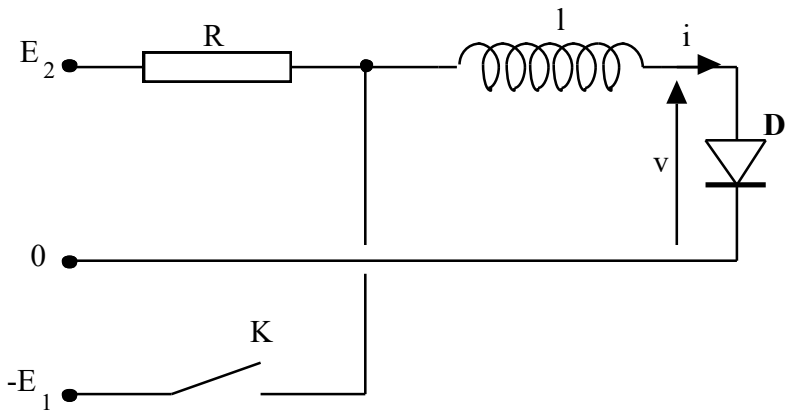

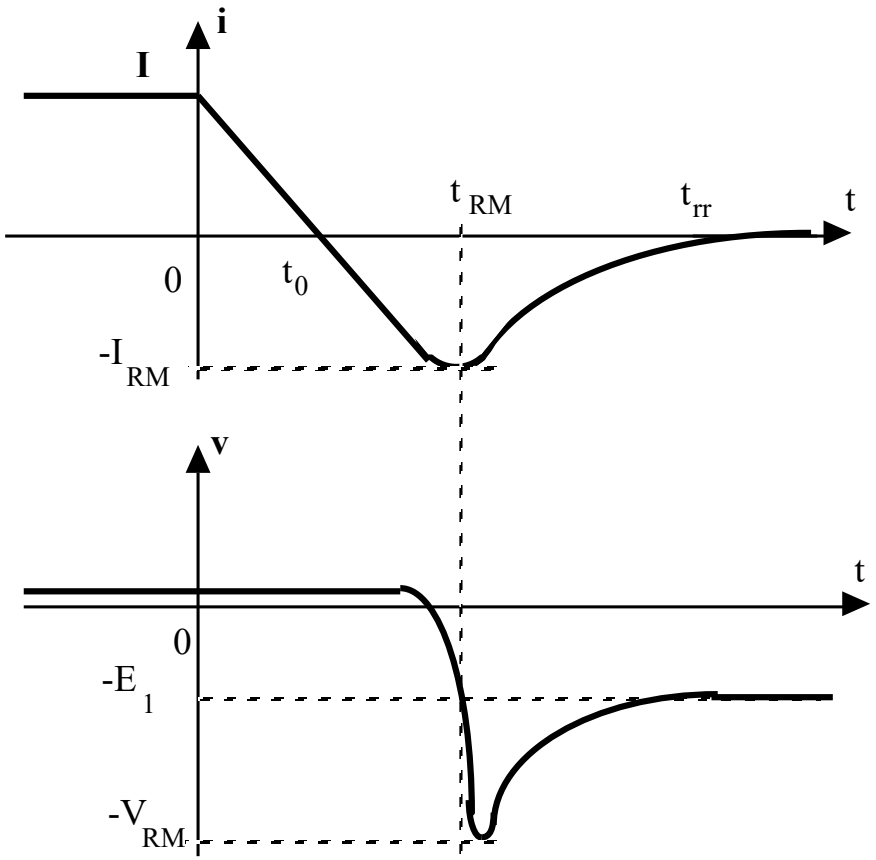

Simplified study of the turn off

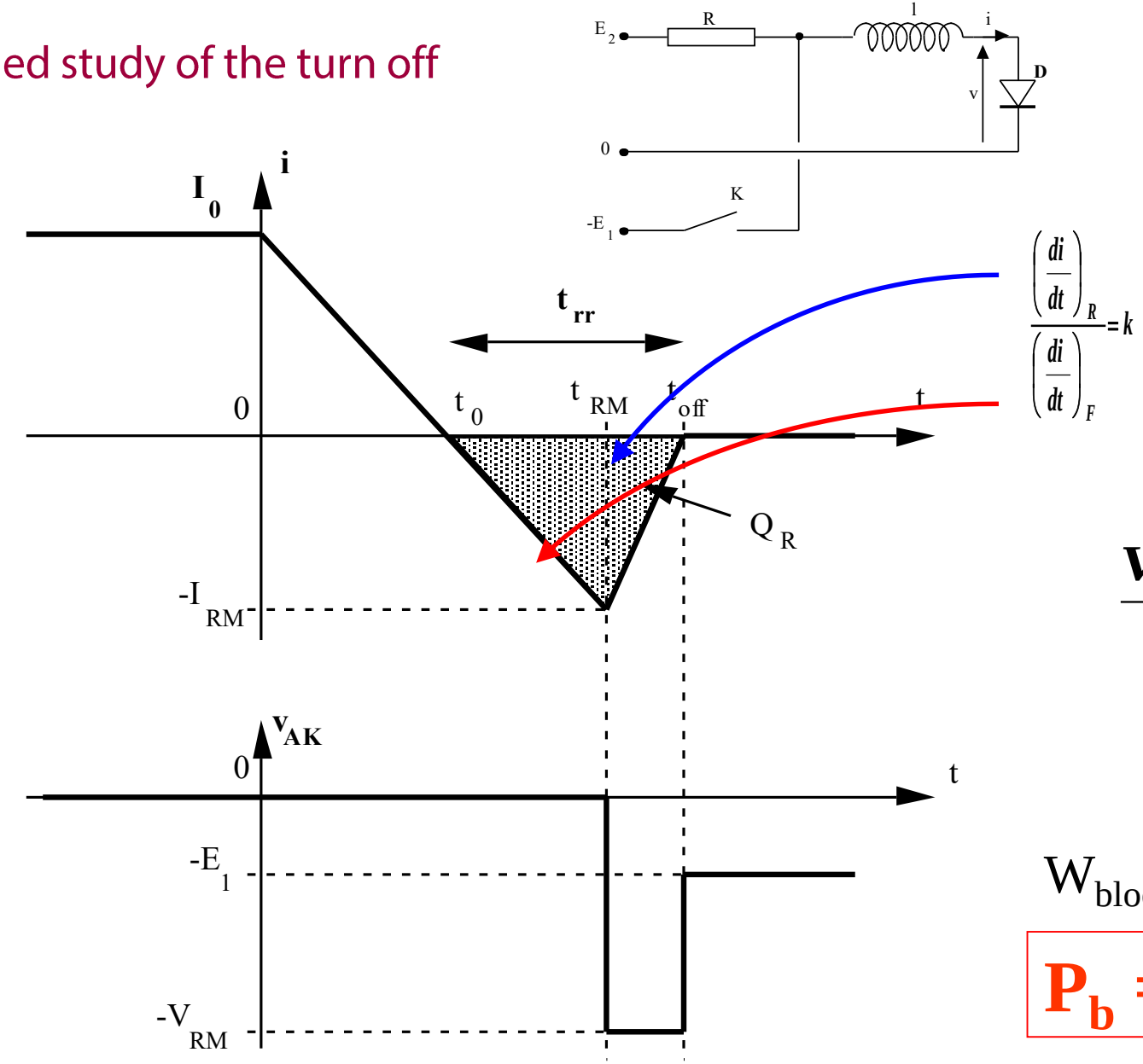

$$\frac{V_{RM}}{E_1} = 1 + k$$

$$W_{bloc} = E_1 . Q_R$$

$$P_b = f.E_1 . Q_R$$

Heat sink

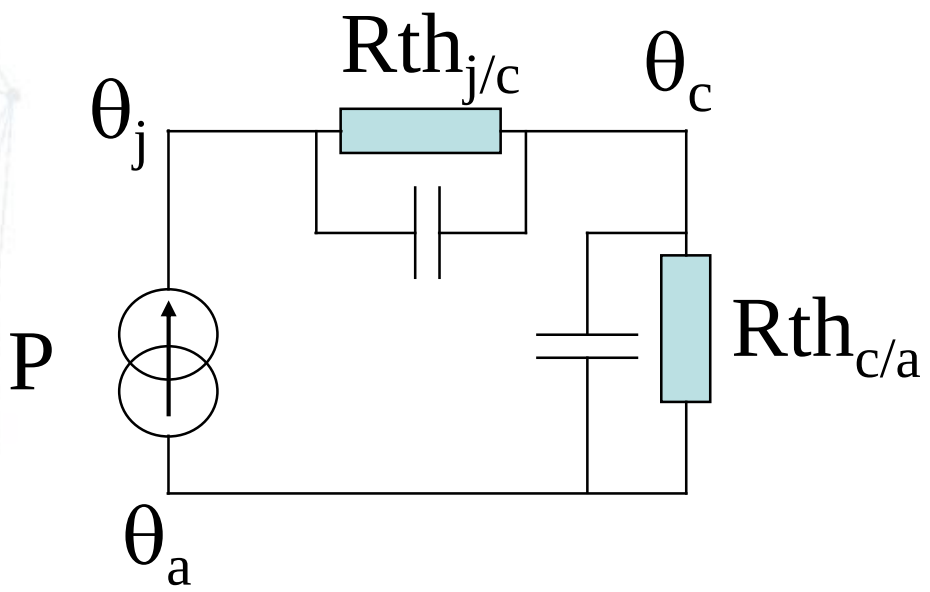

$$P = P_c + P_b$$

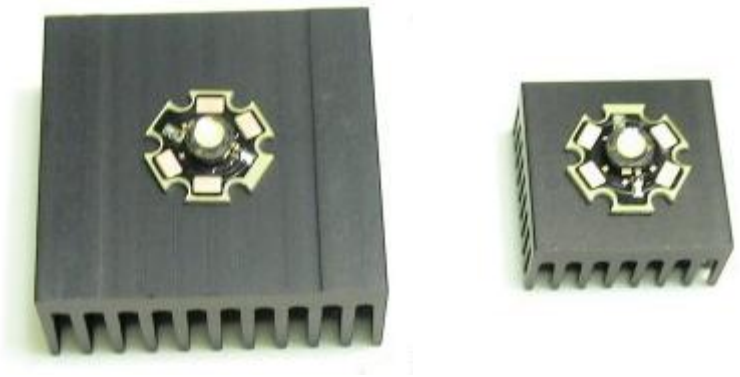

$$\boxed{\theta_j < \theta_{jmax}}$$

$Rth_{c/a}$ calculation

Specific diode

- ***Low threshold diode: Schottky diode***
- ***High voltage diode***
- ***Power Zener diodes (« Transient-voltage-suppression diode »)***
- ***Fast diodes (low Q_R)***
- ***Light-emitting diodes (high threshold)***

Schottky diode

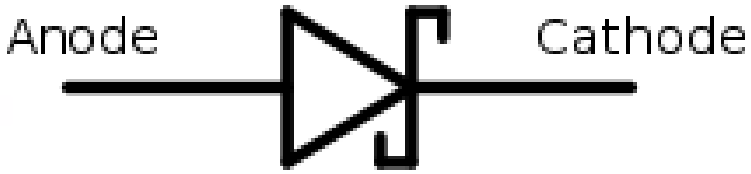

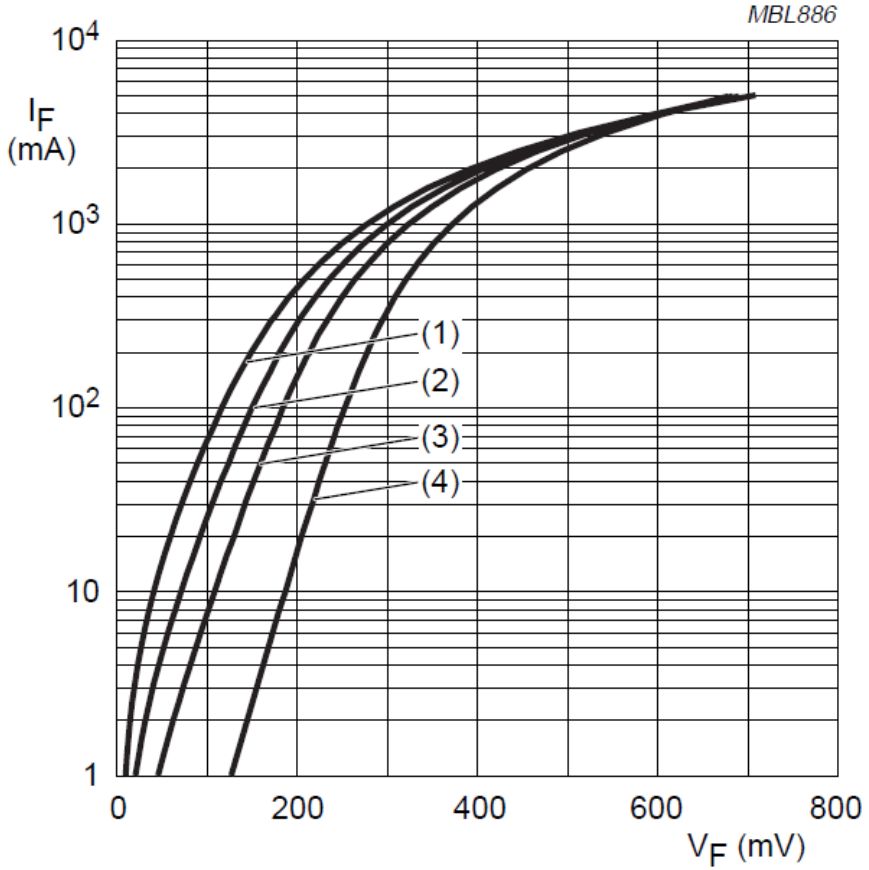

(1) T_{amb} = 125 °C.
(2) T_{amb} = 100 °C.
(3) T_{amb} = 75 °C.
(4) T_{amb} = 25 °C.

Fig.2 Forward current as a function of forward voltage; typical values.

Bipolar power transistor

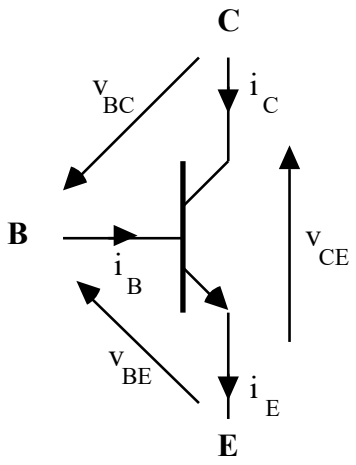

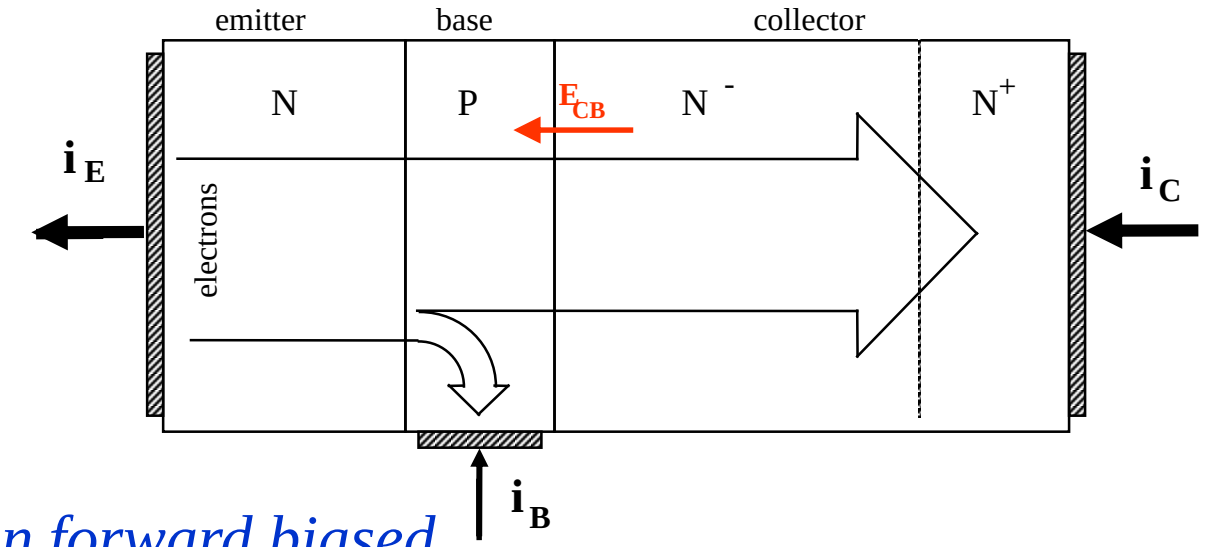

Base-emitter junction forward biased

Base-collector junction reverse biased

$$i_C = \alpha . i_E \; ; \; i_B = (1 - \alpha) . i_E$$

$$\beta = \frac{\alpha}{1 - \alpha}$$

$$i_C = \beta . i_B$$

Transistor characteristic

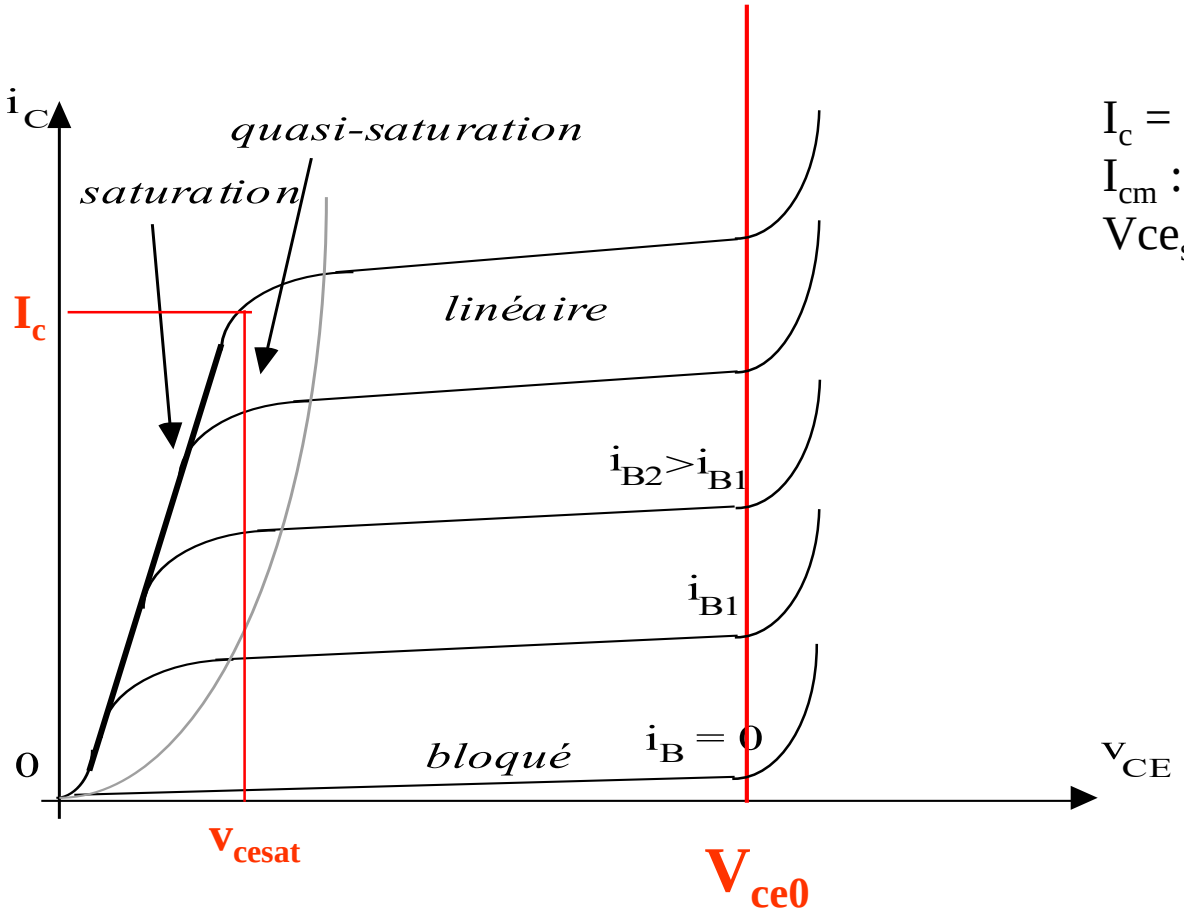

I_c = average current
I_{cm} : maximum forward current
Vce_{sat} : saturation voltage

Conduction loss

$$P_c = Vce_{sat}.I_c.\alpha$$

Transistor safety area

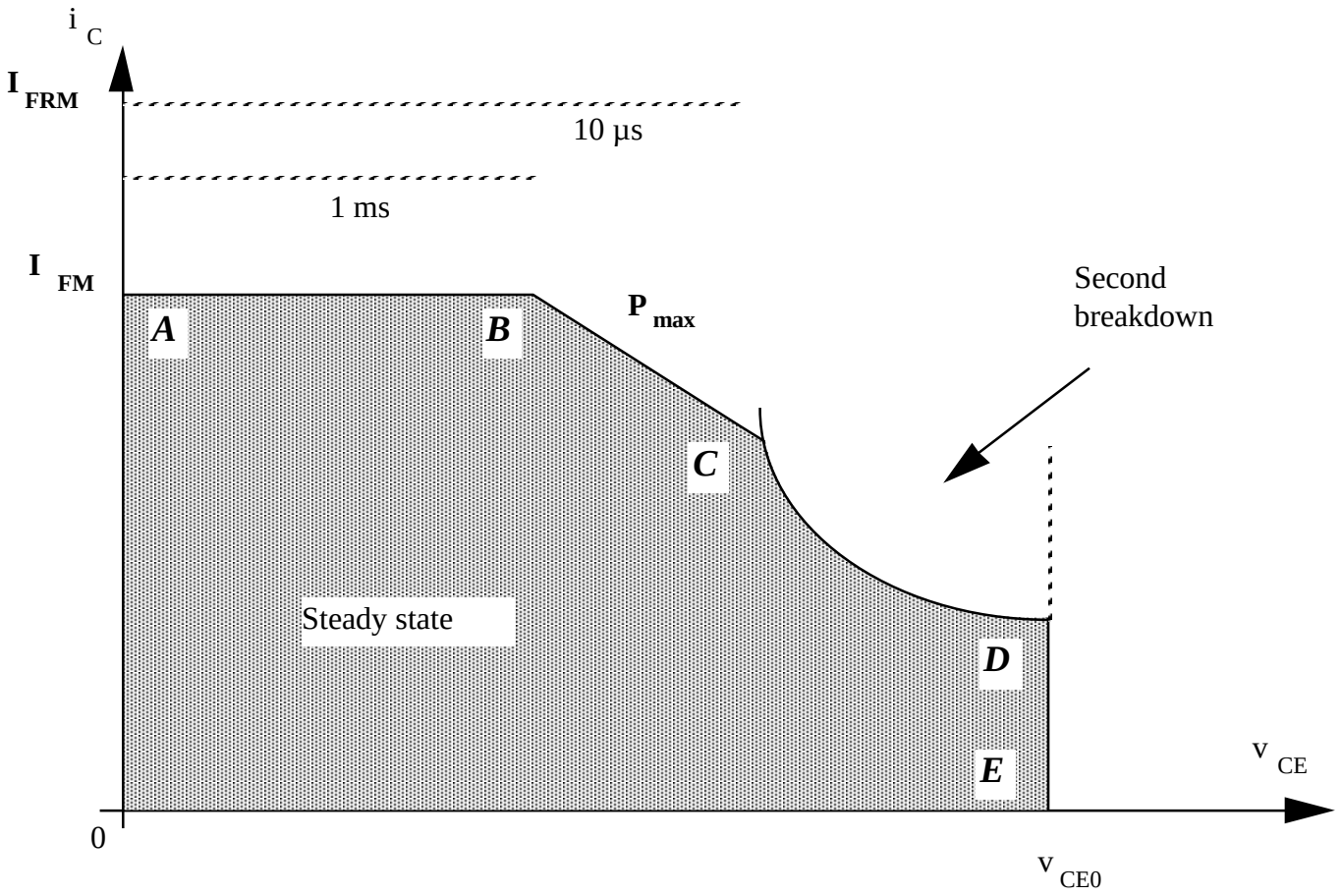

Transistor switching

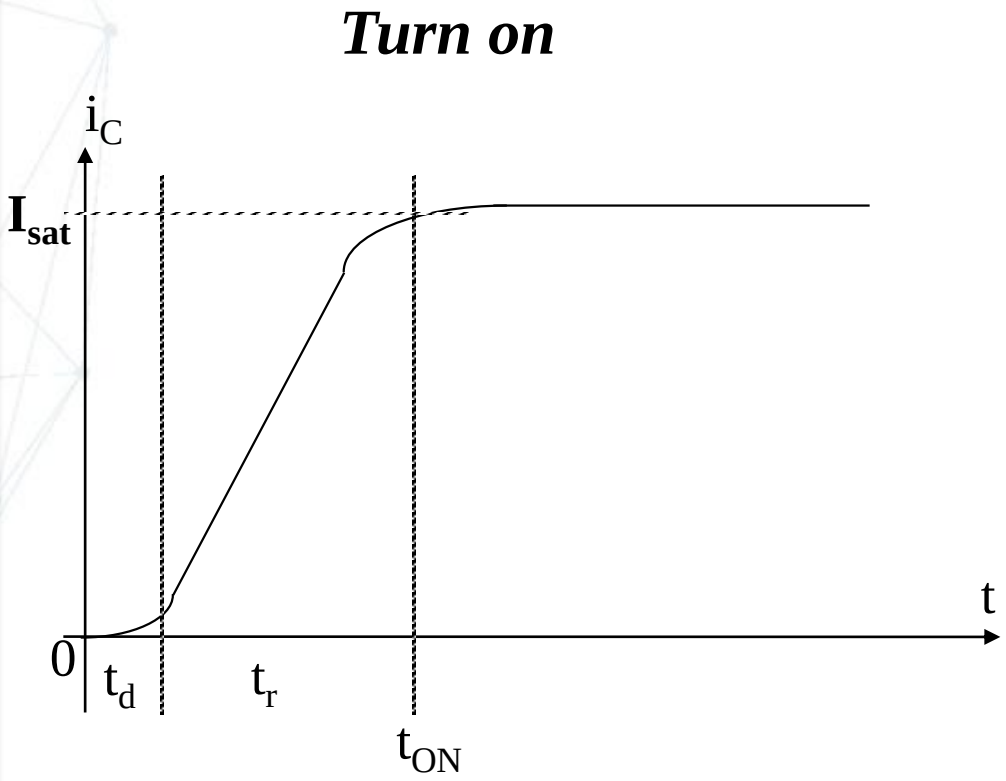

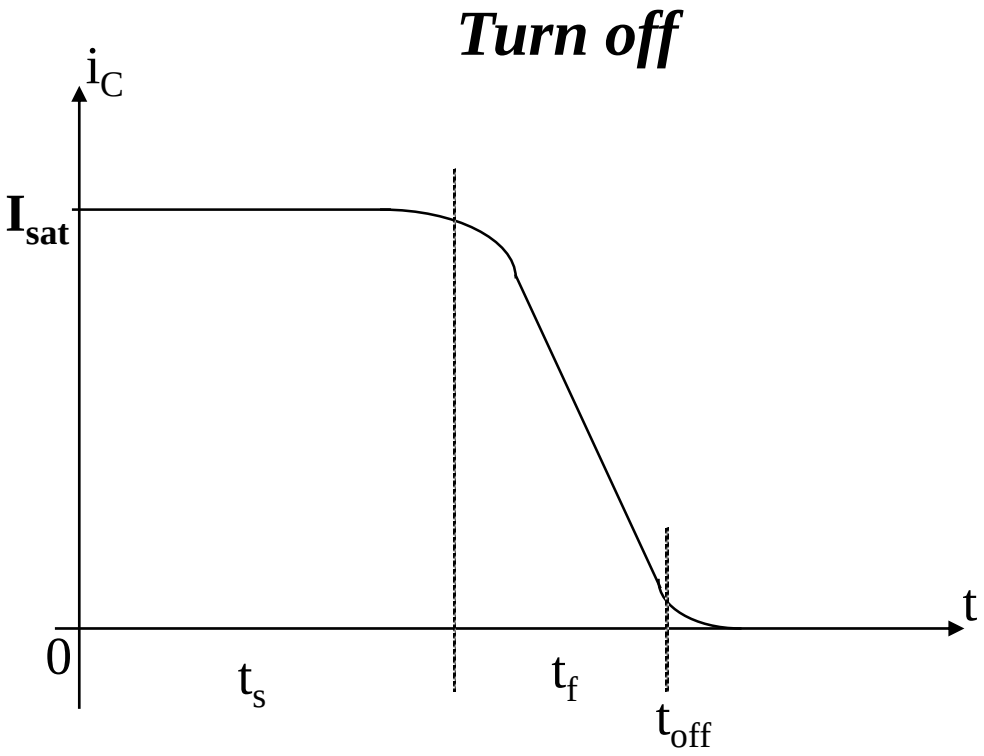

Switching cycle

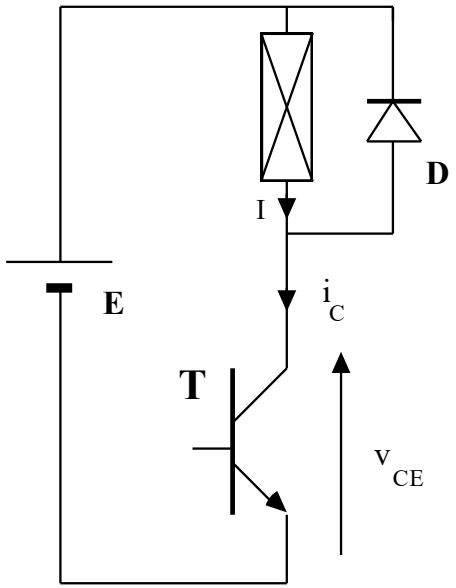

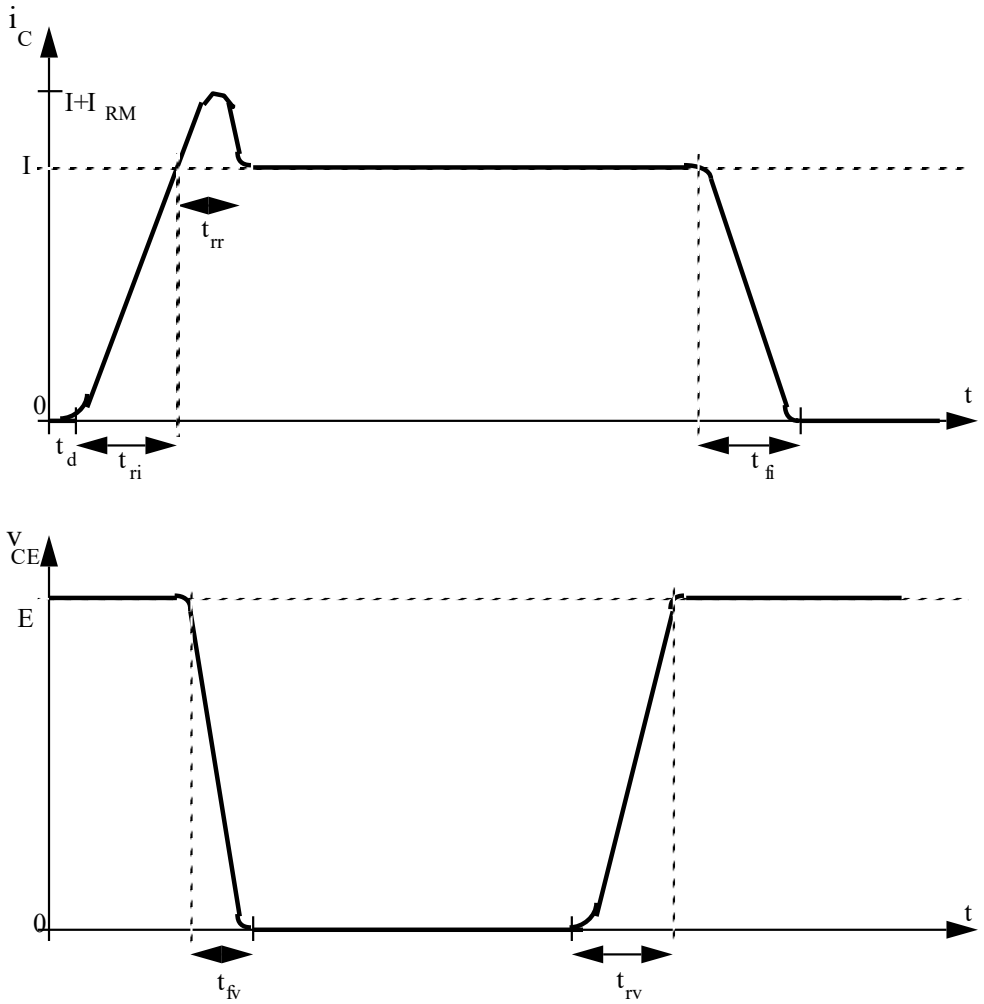

$$P_f = \frac{1}{2} \cdot EI \cdot (t_{fv} + t_{ri}) \cdot f$$

$$P_b = \frac{1}{2} \cdot EI \cdot (t_{fi} + t_{rv}) \cdot f$$

Control circuit: driver

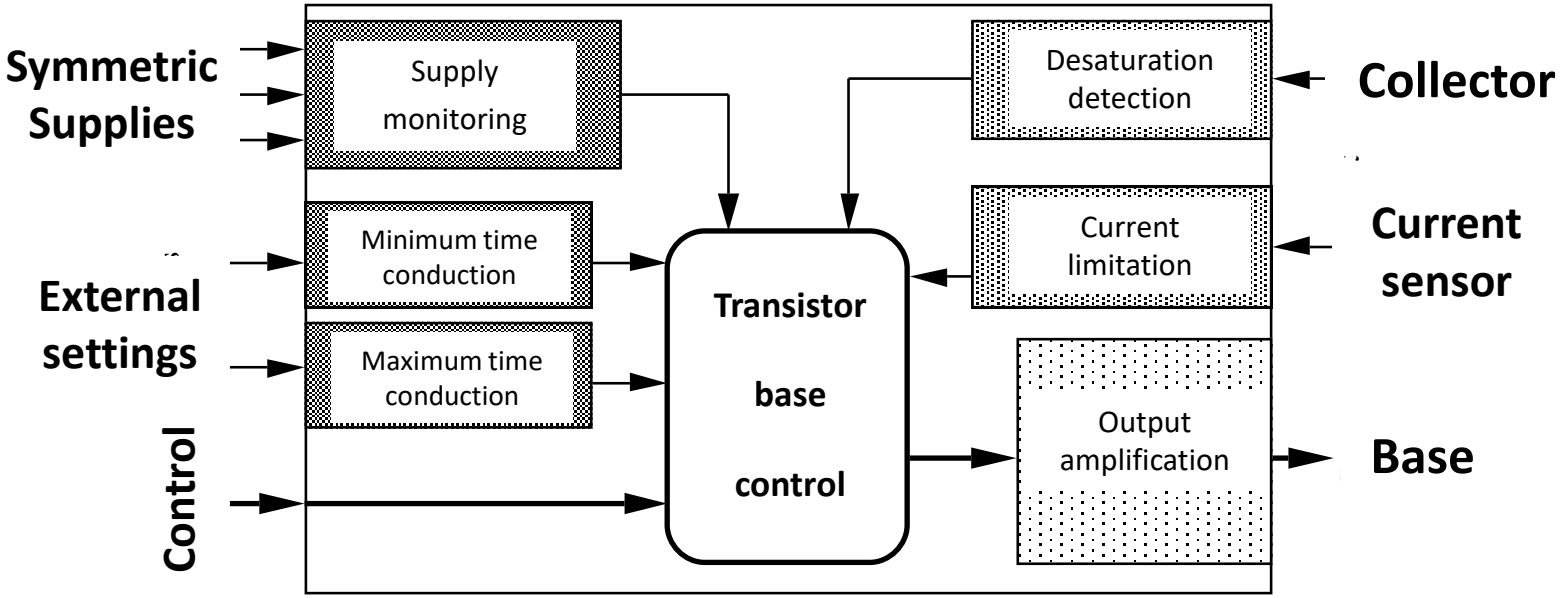

Cases

Power MOS

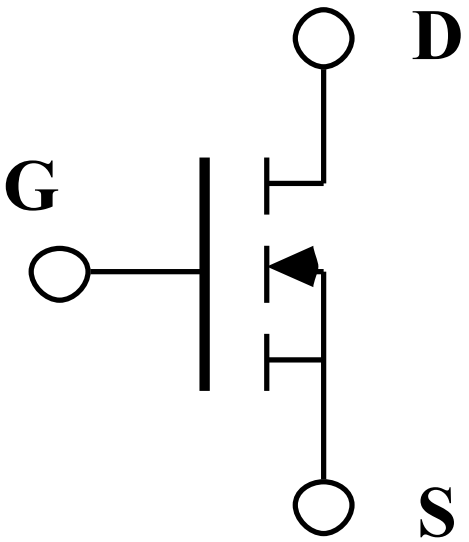

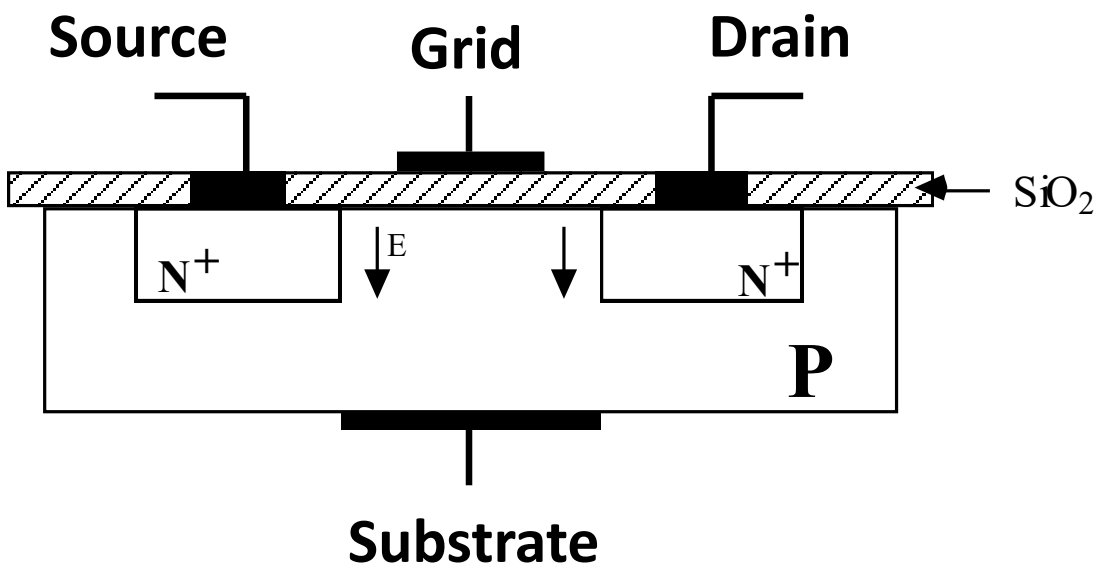

MOSFET characteristics

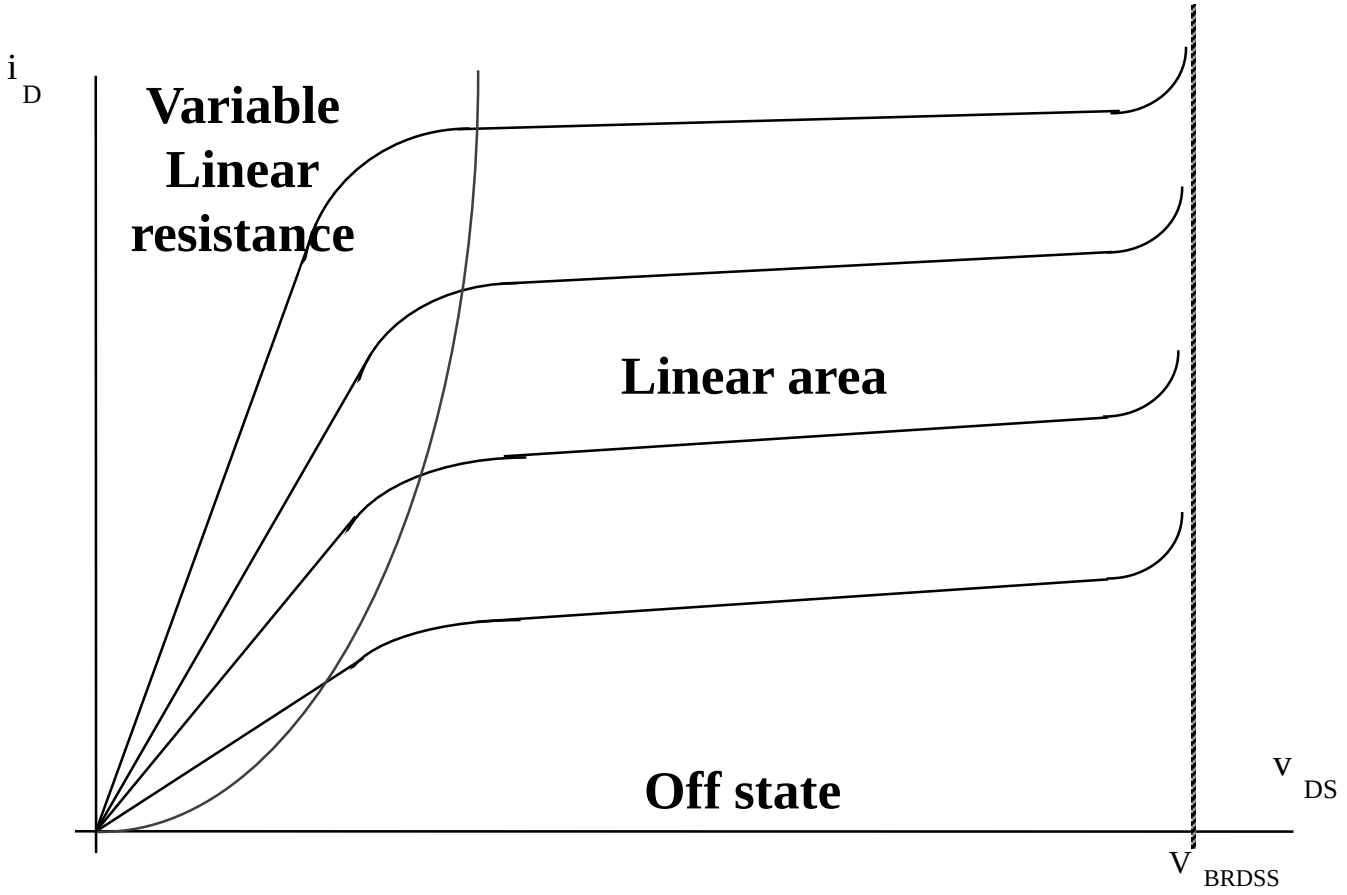

MOS safety area

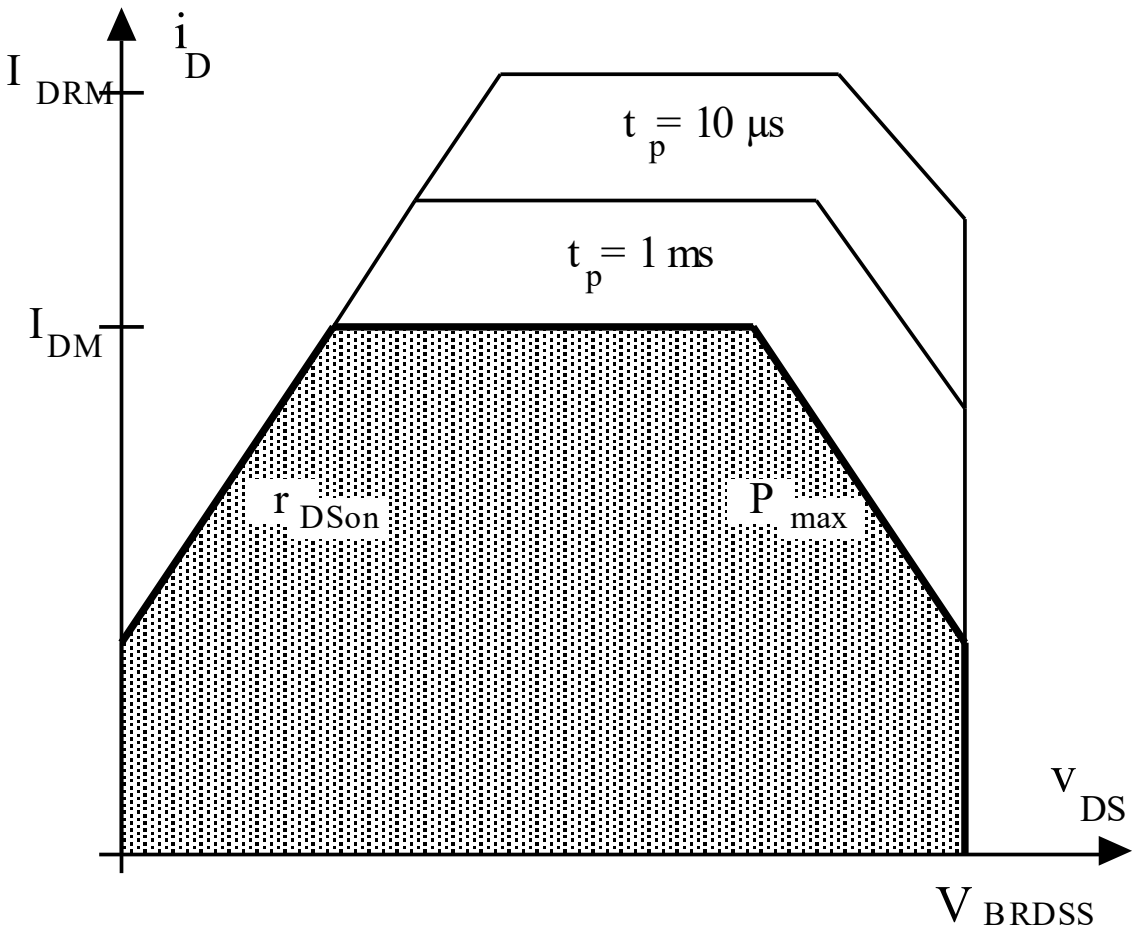

MOS parasitic diode

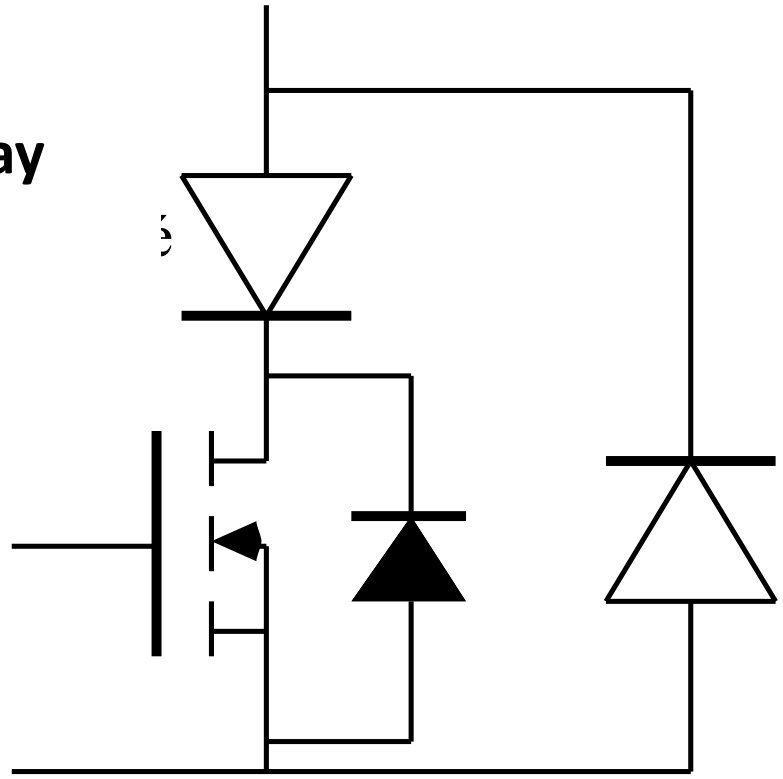

I.G.B.T. : Insulated-Gate Bipolar Transistor

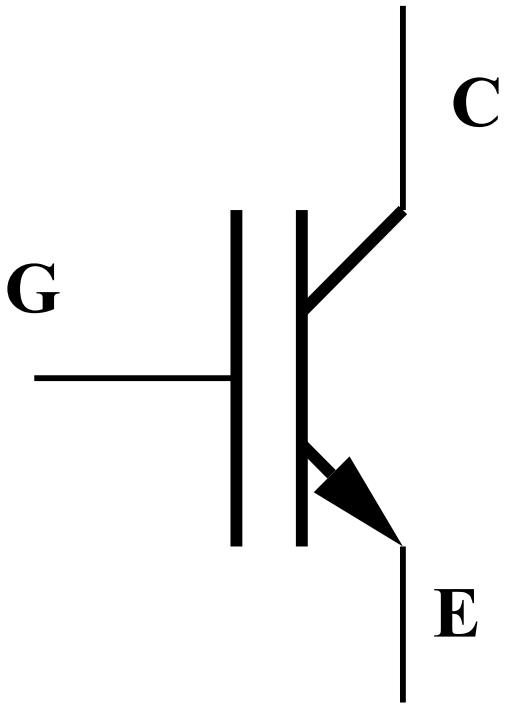

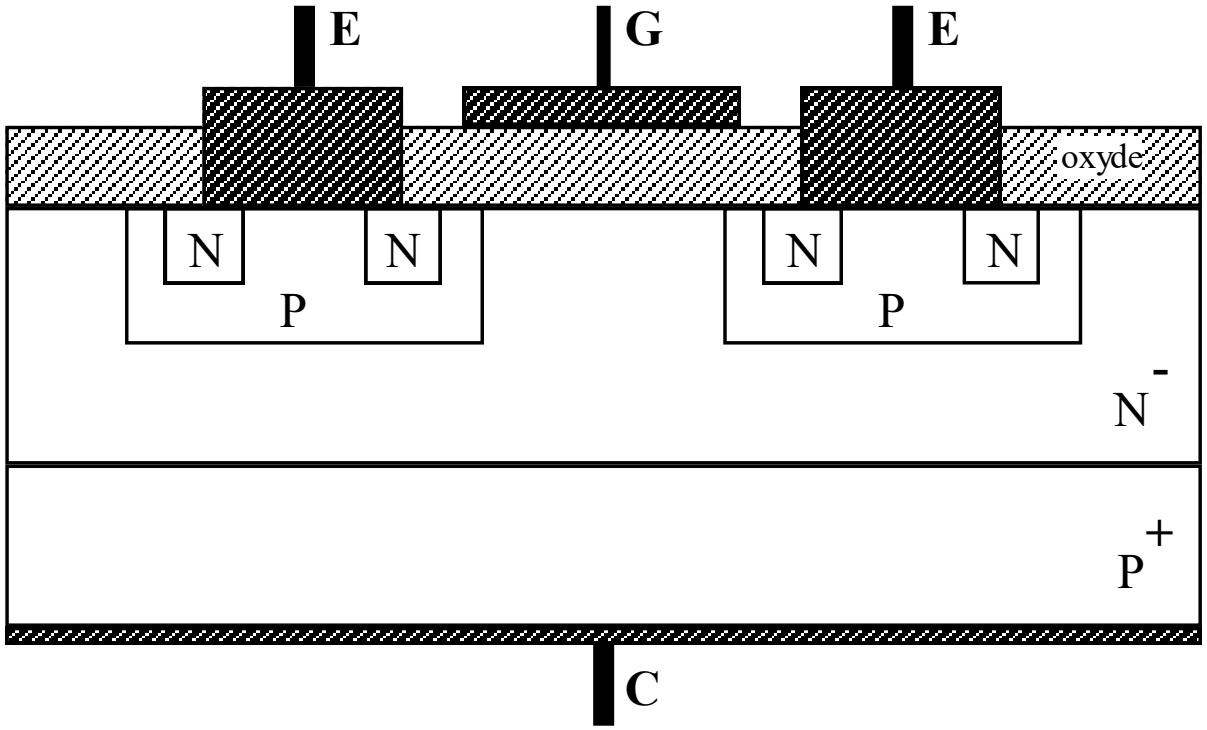

Power IGBT

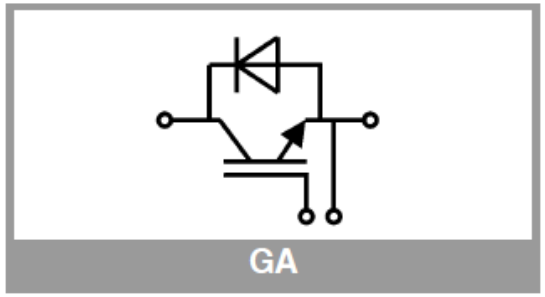

Absolute Maximum Ratings				
Symbol	Conditions		Values	Unit
IGBT				
V_{CES}	$T_j = 25\ °C$		1200	V
I_C	$T_j = 175\ °C$	$T_c = 25\ °C$	1305	A
		$T_c = 80\ °C$	1003	A
I_{Cnom}			900	A

I.G.B.T. half bridge

Absolute Maximum Ratings				
Symbol	**Conditions**		**Values**	**Unit**
IGBT				
V_{CES}	$T_j = 25\ °C$		1200	V
I_C	$T_j = 175\ °C$	$T_c = 25\ °C$	422	A
		$T_c = 80\ °C$	324	A
I_{Cnom}			300	A
I_{CRM}	$I_{CRM} = 3xI_{Cnom}$		900	A

Characteristics						
Symbol	**Conditions**		**min.**	**typ.**	**max.**	**Unit**
$t_{d(on)}$	$V_{CC} = 600\ V$	$T_j = 150\ °C$		220		ns
t_r	$I_C = 300\ A$	$T_j = 150\ °C$		44		ns
E_{on}	$V_{GE} = \pm 15\ V$	$T_j = 150\ °C$		27		mJ
$t_{d(off)}$	$R_{G\ on} = 1.5\ \Omega$	$T_j = 150\ °C$		520		ns
t_f	$R_{G\ off} = 1.5\ \Omega$	$T_j = 150\ °C$		117		ns
E_{off}	$di/dt_{on} = 6100\ A/\mu s$	$T_j = 150\ °C$		39		mJ
$R_{th(j-c)}$	$di/dt_{off} = 3000\ A/\mu s$ per IGBT				0.11	K/W

Modules

SEMITRANS® 6

SEMiX® 13

1200 V – 39 A at 25°C – t_f < 200ns

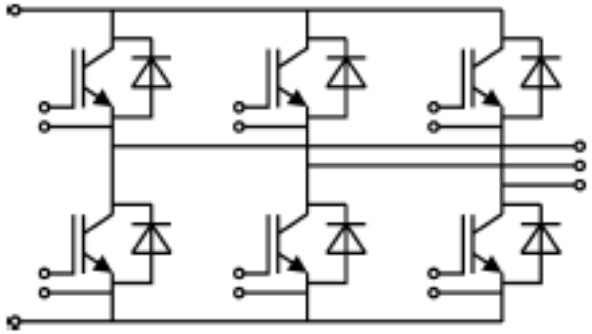

GD

1200 V – 231 A at 25°C – t_f < 500ns

IGBT equivalent scheme

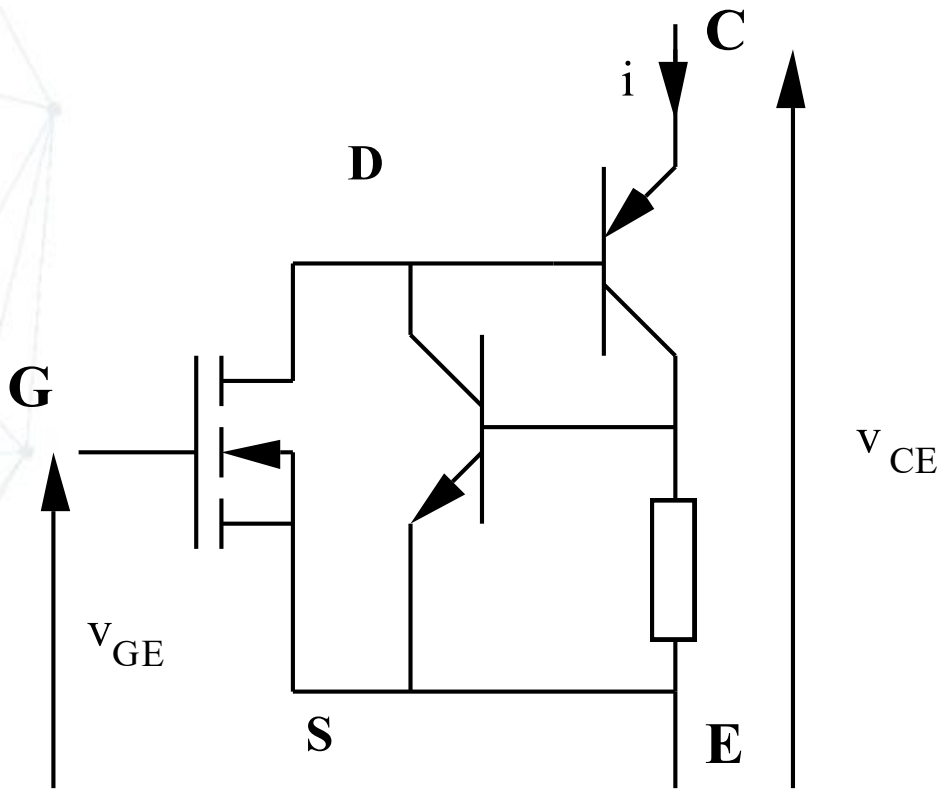

Control: MOS's one
Forward voltage: bipolar
Voltage withstand: MOS

Switch off : MOS
Switch on : bipolar (dragging)

IGBT model: commutation mode

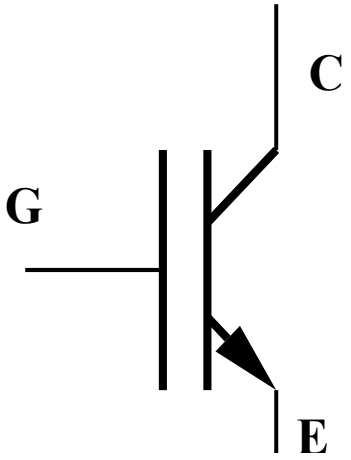

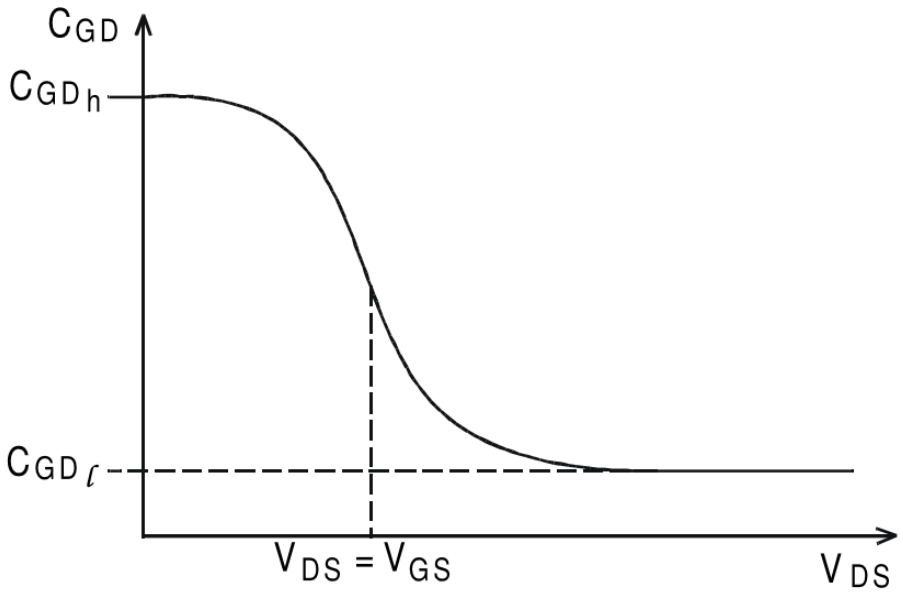

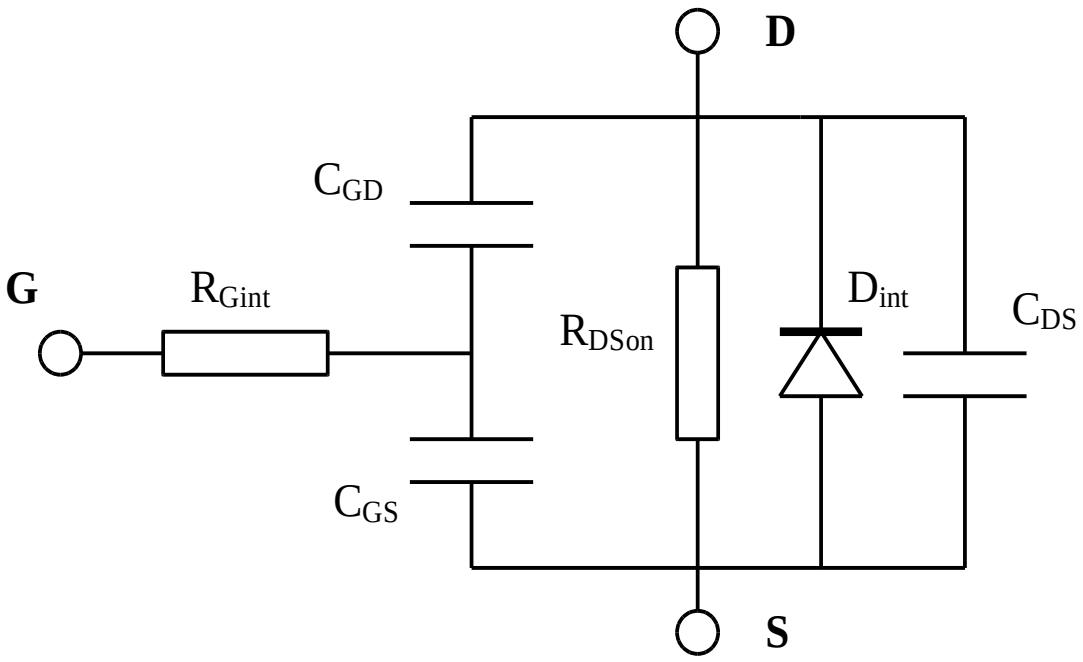

Commutation on a BUCK chopper

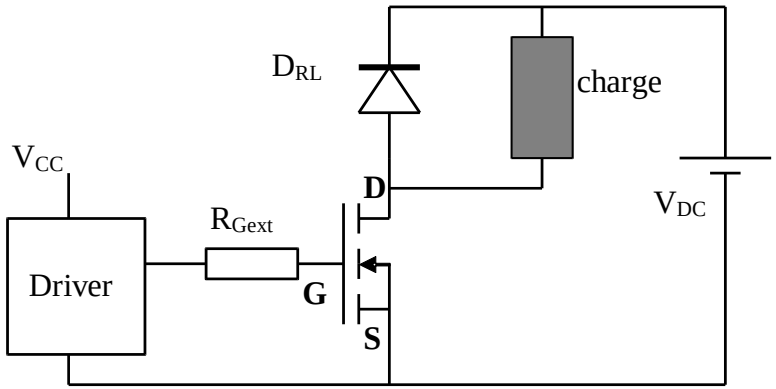

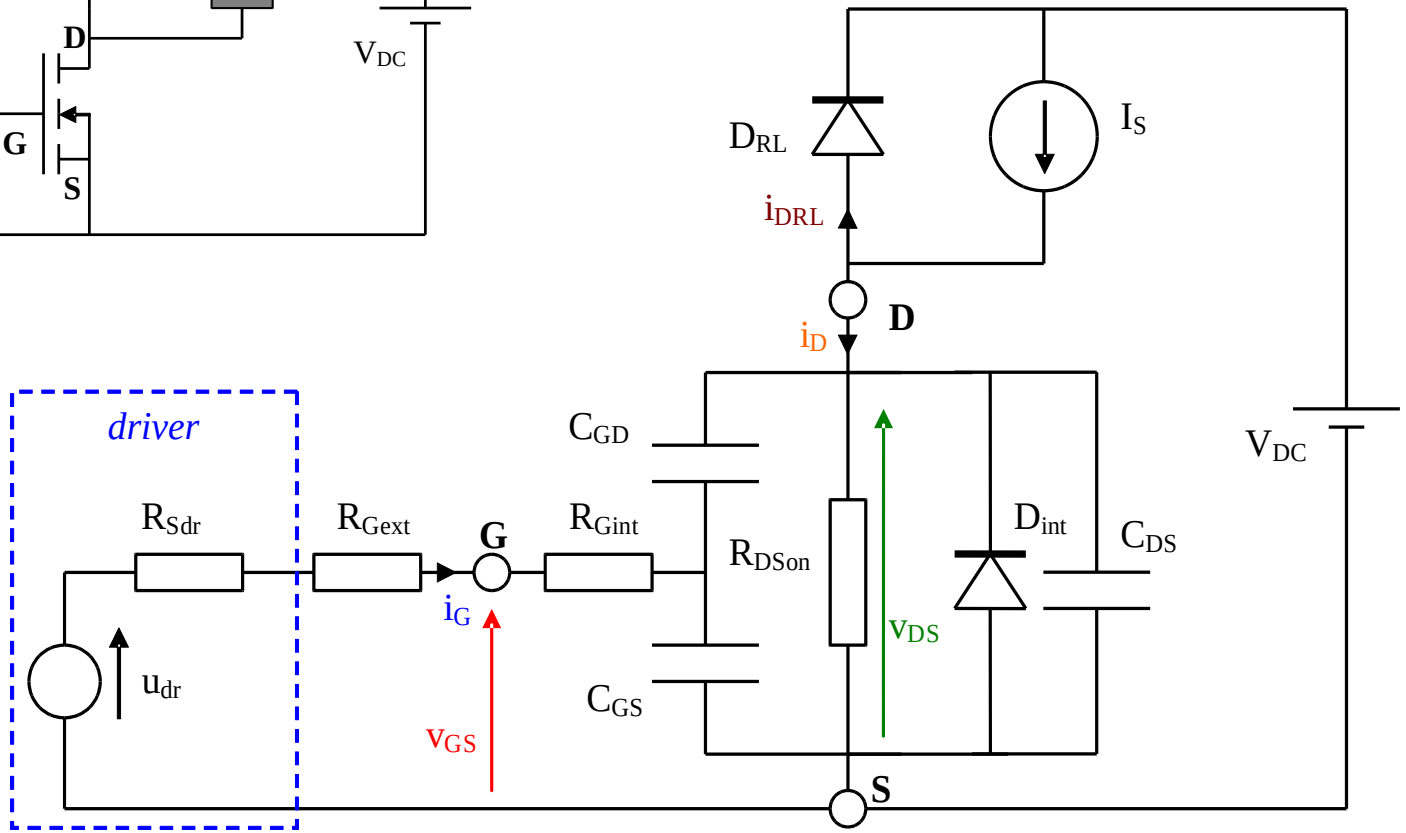

Commutation on a BUCK chopper: Turn on

$[0..t_1]$: the transistor is still off state

t_1 : $v_{GS} = v_{GSTH}$

$[t_1..t_2]$: v_{GS} and i_G are still evolving

t_2 : $i_{DRL} = 0$

$[t_2..t_3]$: diode reverse recovery

t_3 : end of recovery

$[t_3..t_4]$: v_{DS} relaxation

t_4 : end of switching i_D,v_{DS}

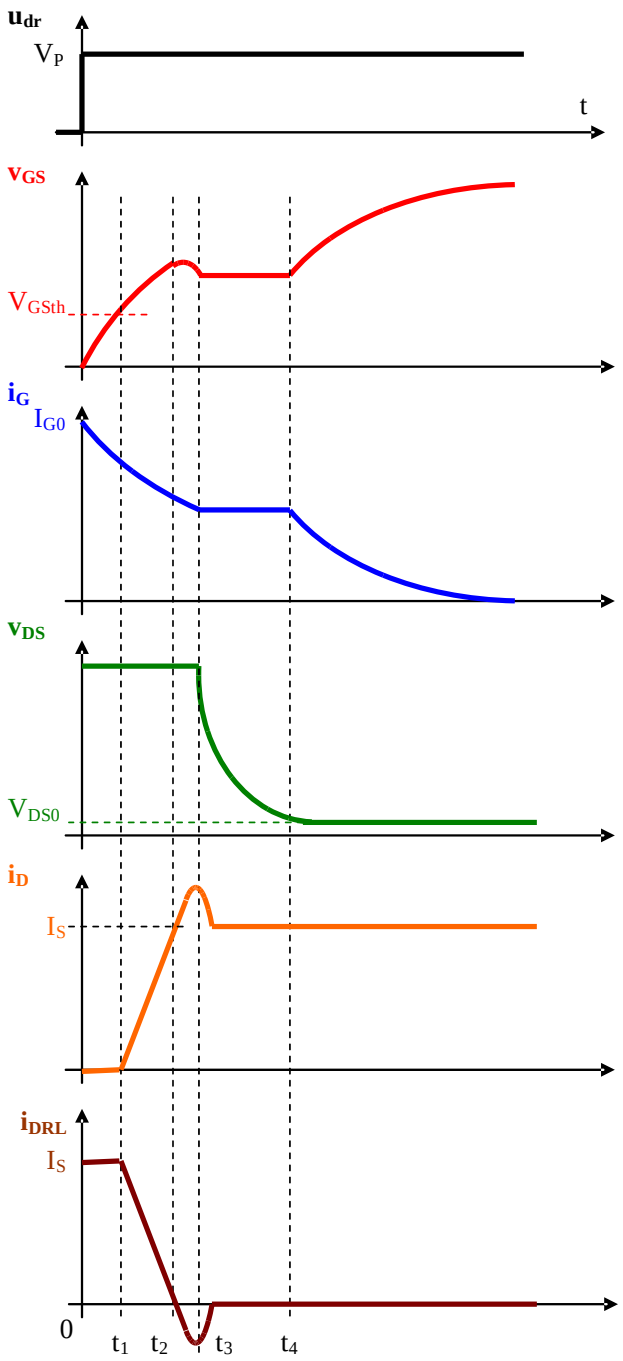

Commutation on a BUCK chopper: Turn off

$[0..t'_1]$: the transistor is still on state

$v_{DS} = v_{DSO}$

$[t'_1..t'_3]$: v_{DS} increases, transistor on state

t'_3 : DRL forwards

$[t'_3..t'_4]$: i_D decreases

t'_4 : end of switching

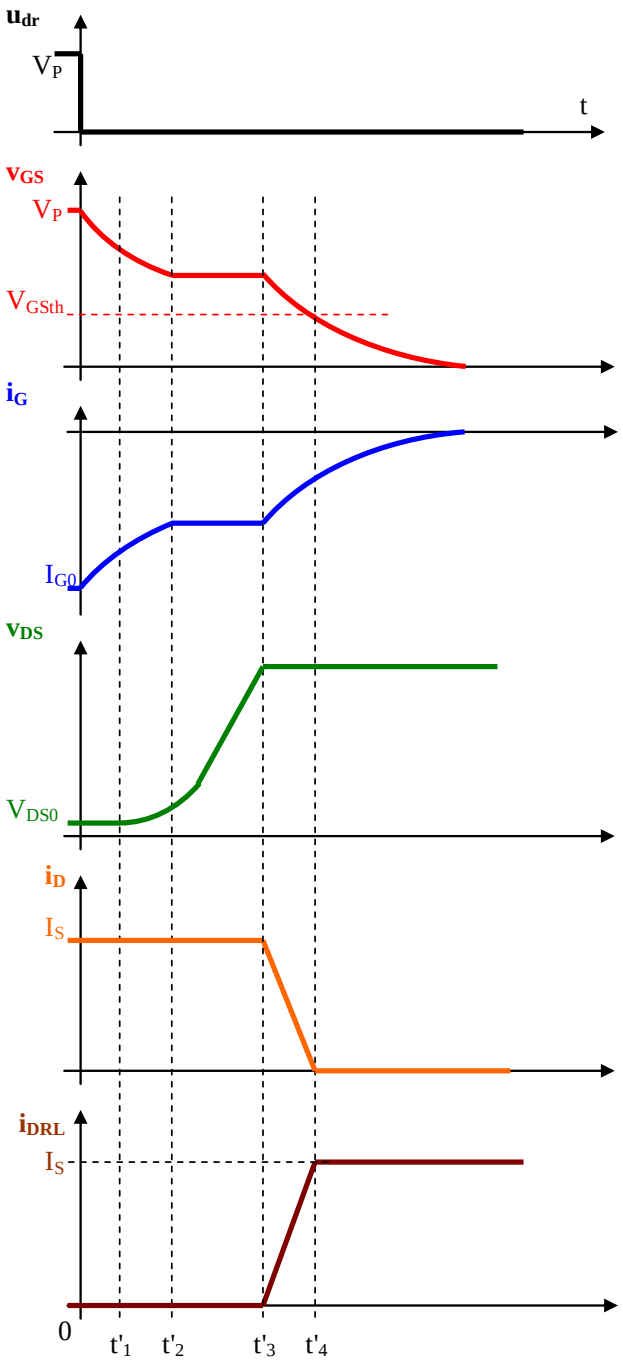

Control specificity

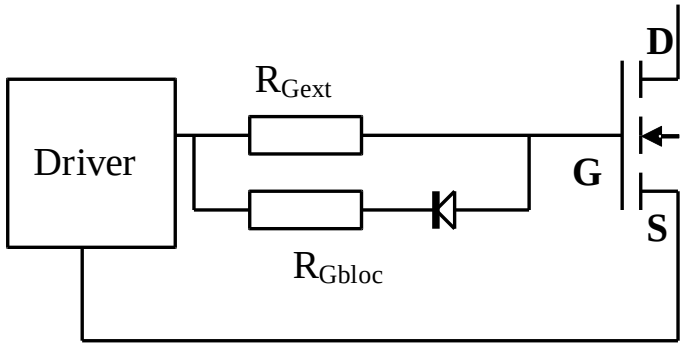

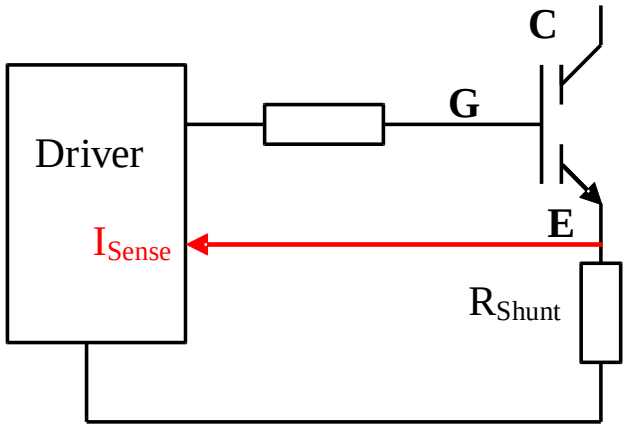

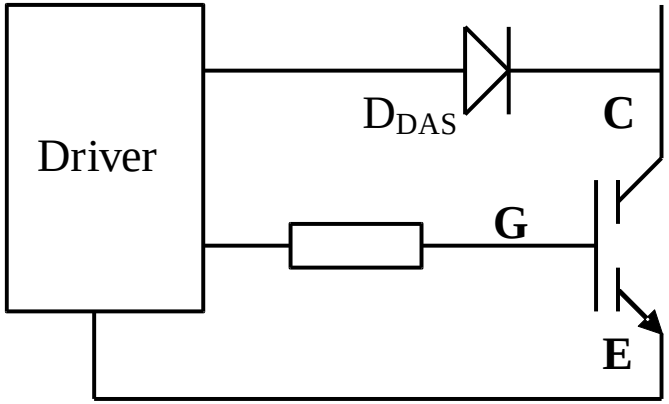
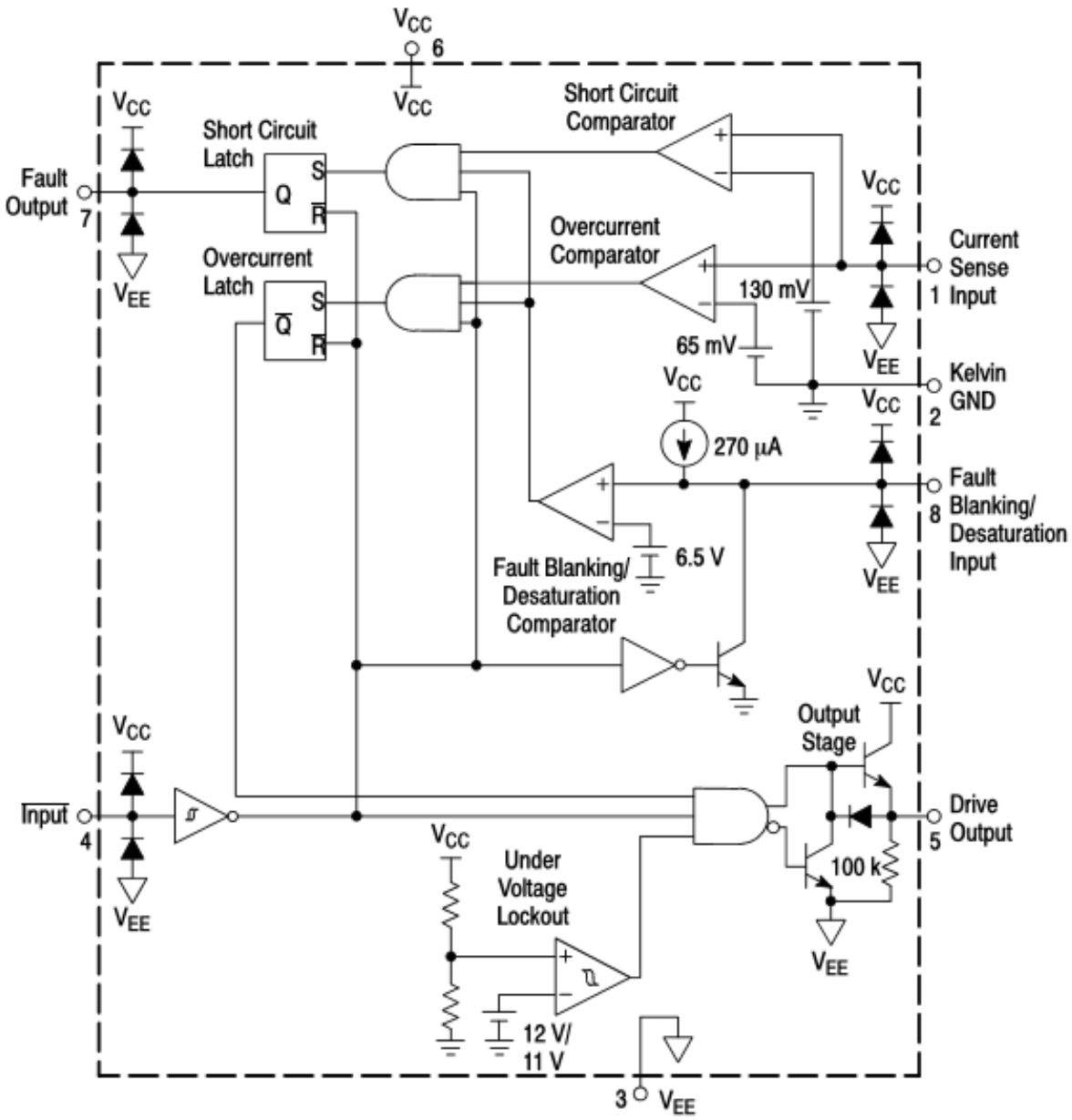
Driver MC33153