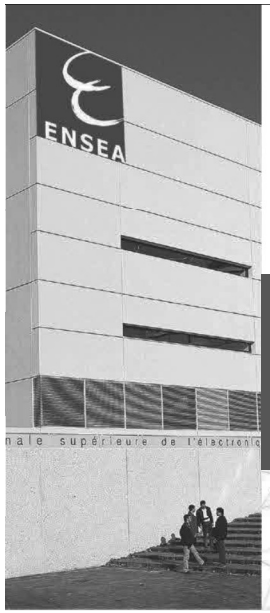

ENSEA
Beyond Engineering

Energy Conversion I

alexis.martin@ensea.fr
Desk D216

Layout

- Non isolated choppers
- Switch mode power supplies
- Power components
- **Sinusoidal absorption**

Introduction

Reminder: Power in AC

$$V_{RMS} = \sqrt{\frac{1}{T}\int_0^T v^2(t)dt}$$

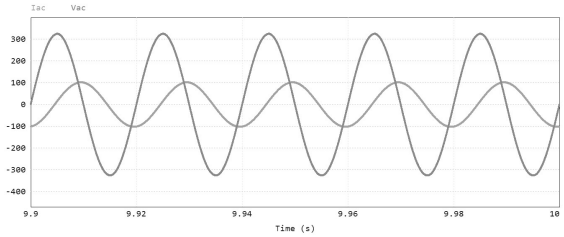

- **Real power:** $P = < p(t) > = < v(t).i(t) > = V_{RMS}.I_{RMS}.\cos(\varphi_1)$
- **Reactive power:** $Q = V_{RMS}.I_{RMS}.sin(\varphi_1)$
- **Apparent power:** $S = V_{RMS}.I_{RMS}$
- **Power factor:** $pf = \frac{P}{S}$
- **Total harmonic distortion:** $THD = \frac{\sqrt{\sum_{n=2}^{\infty} I_{n\,RMS}^2}}{I_{1\,RMS}}$

Reminder: Diode rectifier

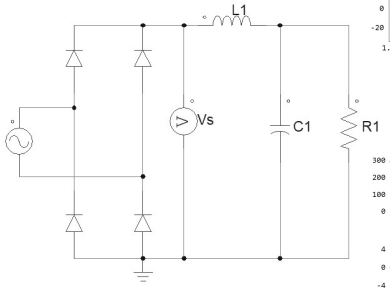

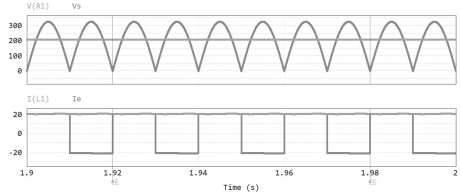

$L = 10H \rightarrow pf = 0,9 \qquad THD = 0,48$

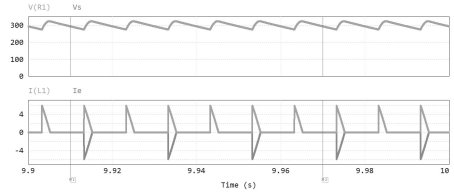

$L = 10nH \rightarrow pf = 0,5 \qquad THD = 1,5$

European standard: 61000-3-2

Limits for harmonics currents emission (class C ≈ lightning)

Tableau 2 – Limites pour les appareils de classe C

Rang harmonique n	Courant harmonique maximal exprimé en pourcentage du courant fondamental d'entrée des luminaires %
2	2
3	30 σ
5	10
7	7
9	5
11 ≤ n ≤ 39 (harmoniques impairs seulement)	3
* σ est le facteur de puissance du circuit	

European standard: 61000-3-2

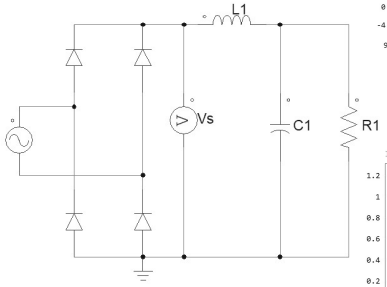

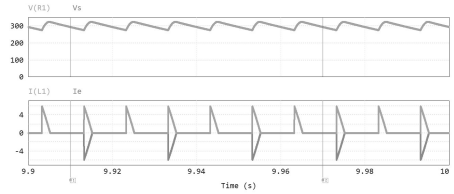

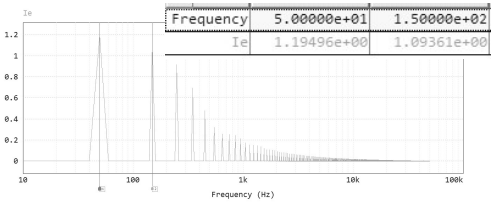

Power factor correction

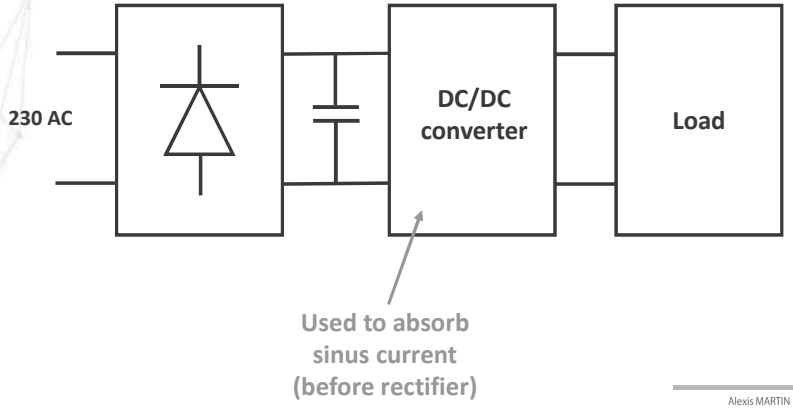

Boost for PFC

Structure

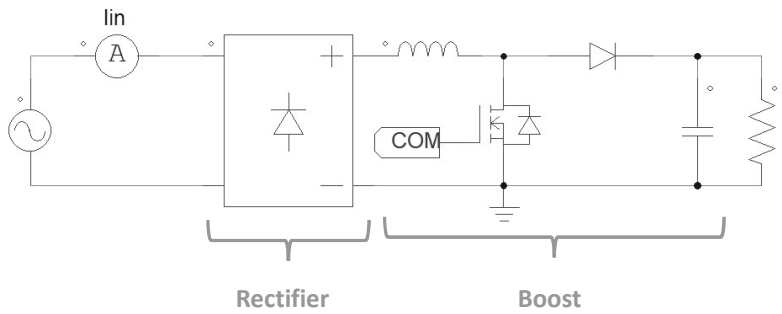

Structure

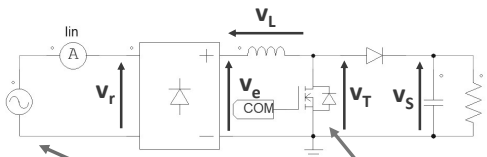

$v_r = V\sqrt{2}\sin(\theta)$
$\theta = 2\pi f_{BF} t$

- 2 frequencies: f_{LF} (50Hz for grid) and f_{HF} (few 10 kHz for switching)

Goal:

- $I_{in} = I.\sqrt{2}\sin(\theta)$

- $v_e = |v_r|$ and $v_e = (1-\alpha)v_S$ → $V_S > v_{r\,max}$

- Two control strategies :
  - Fixed switching frequency -> PWM
  - Free switching frequency -> hysteresis control

PWM control

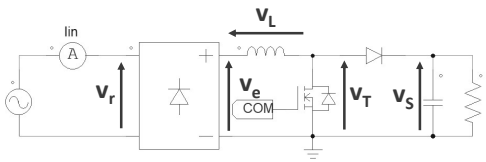

- With PWM control, the switching frequency is fixed, the duty cycle is used to control the current

- For low frequency, the boost is a continuous voltage amplifier controlled with the duty cycle α

- Continuous conduction of diodes in the rectifier:

$v_e = |v_r| = V\sqrt{2}.|\sin(\theta)|$

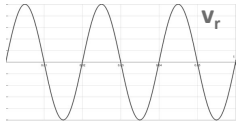

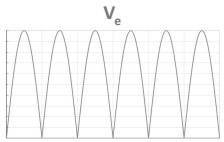

PWM control

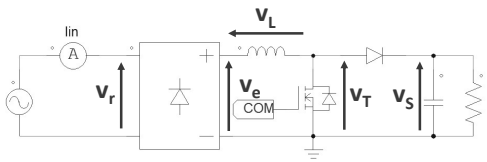

- $v_L = v_e - v_T = V\sqrt{2}.|\sin(\theta)| - (1-\alpha)V_S = L\frac{di_L}{dt}$
- We want $I_{in} = I.\sqrt{2}\sin(\theta)$
  - $i_L = I.\sqrt{2}.|\sin(\theta)|$
- For $0 < \theta < \pi$:
  - $1 - \alpha = \frac{V\sqrt{2}}{V_S}.\sin(\theta) - \frac{L.2\pi f_{LF}.I\sqrt{2}}{V_S}\cos(\theta)$
  - $\alpha = 1 - \frac{V\sqrt{2}}{V_S}.\left(\sin(\theta) - \frac{2\pi L f_{LF}.P}{V^2}\cos(\theta)\right)$

PWM control

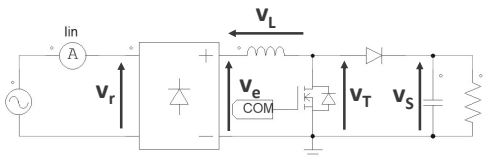

- $\alpha = 1 - \frac{V\sqrt{2}}{V_S}.\left(\sin(\theta) - \frac{2\pi L f_{LF}.P}{V^2}\cos(\theta)\right)$

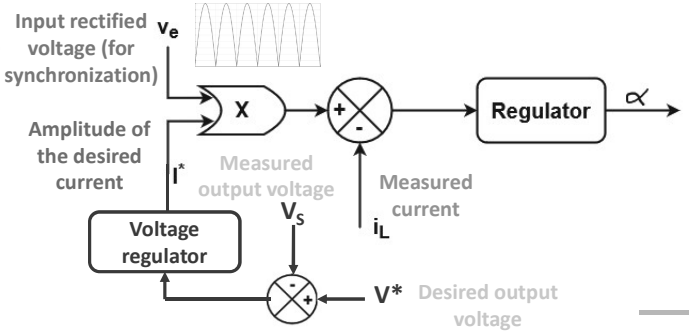

PWM control

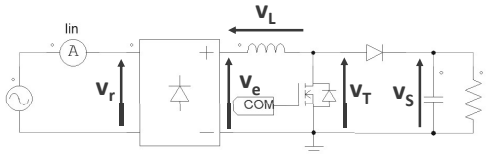

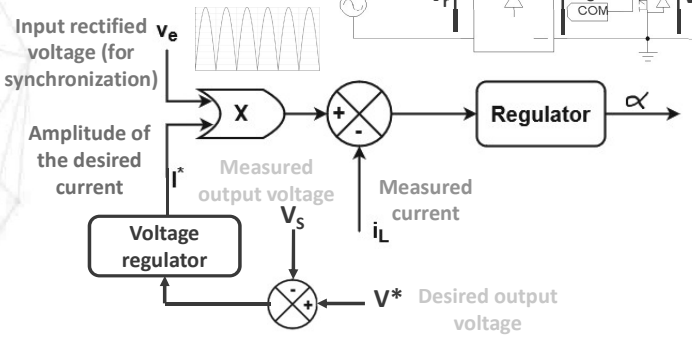

Condition: voltage control « slow » (few Hz) to ensure sinusoidal current

Filter the output voltage for measurement (sample at $2f_{BF}$, band-stop filter, high output capacitor)

PWM control: components sizing

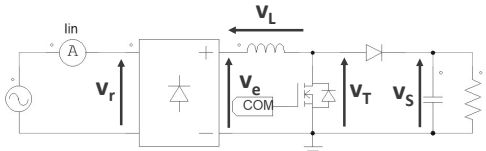

- Semi-conductors

$< i_D > = \frac{P}{V_S}$ $\qquad < i_T > = < i_L > - < i_D > = \frac{P}{V_S}\left(\frac{4}{\pi}\frac{V_S}{V\sqrt{2}} - 1\right)$

$I_{T\,RMS} = \frac{P}{V}\sqrt{1 - \frac{8.V\sqrt{2}}{3\pi V_S}}$ $\qquad I_{D\,RMS} = \frac{P}{V}\sqrt{\frac{8.V\sqrt{2}}{3\pi V_S}}$

- Output capacitor

$\Delta V_{S\,BF} = \frac{P}{2\pi f_{BF} C V_S}$ $\qquad I_{C\,RMS} = \frac{P}{V_S}\sqrt{\frac{16.V_S}{3\pi V\sqrt{2}} - 1}$

- Input inductor: limit the current ripple due to switching BUT small voltage drop

$\Delta i_{HF} = \frac{V_S}{4Lf_{HF}}$ $\qquad \frac{V}{2\pi I f_{BF}} \gg L > \frac{V_S}{4 f_{HF}\Delta i_{HF}}$ $\qquad I_{L\,RMS} = \frac{P}{V}$

Hysteresis control

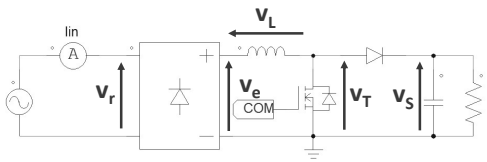

PWM control: need a current regulator to follow a sinus input

- Complicated to design the regulator

- Hysteresis control

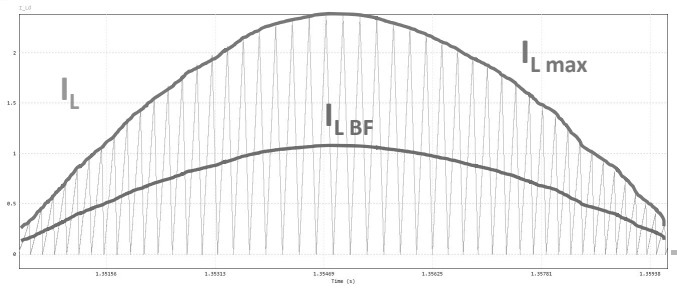

Hysteresis control

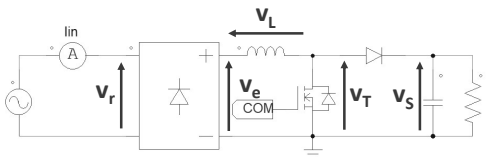

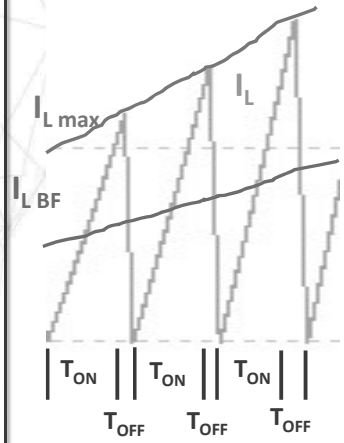

- $I_{L\ max} = \frac{V_e}{L} t_{ON} = 2I_{L\ BF} = 2I\sqrt{2}|\sin(\theta)|$
  - $t_{ON} = \frac{2LI}{V} = \frac{2LP}{V^2} = cst$
- $t_{OFF} = t_{ON}\frac{1-\alpha}{\alpha} = t_{ON}\frac{V_e}{V_S - V_e}$
  - $f_{HF} = \frac{1}{t_{ON}+t_{OFF}} = \frac{1}{t_{ON}}(1 - \frac{V\sqrt{2}}{V_S}|\sin(\theta)|)$
- $f_{HF\ min} = \frac{1}{t_{ON}}$
- $f_{HF\ max} = \frac{1}{t_{ON}}(1 - \frac{V\sqrt{2}}{V_S})$

Hysteresis control

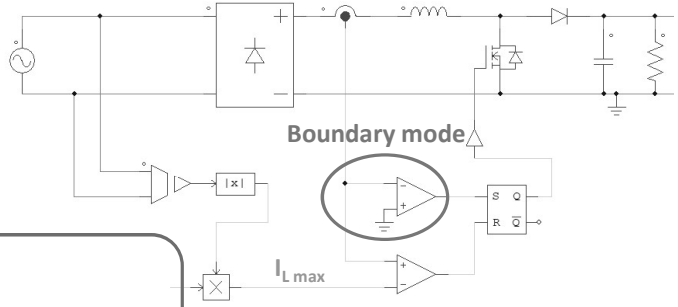

Output voltage control

Frequency response for voltage control : few Hz (much lower than 100Hz)

Example: LED driver

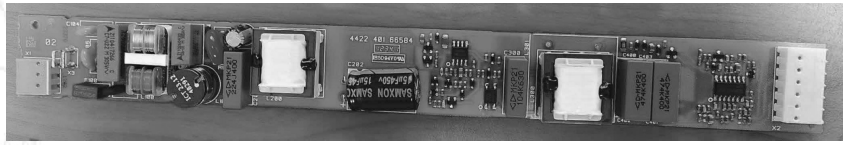

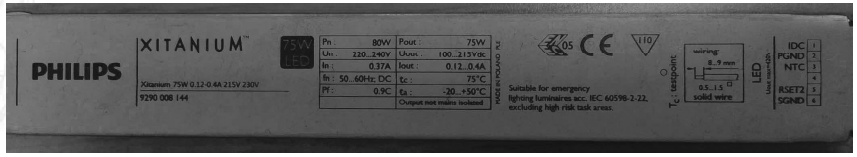

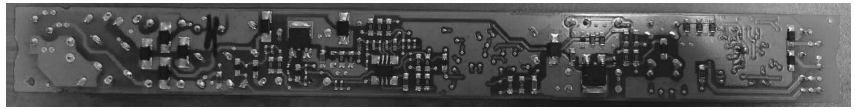

Flyback for PFC

Structure

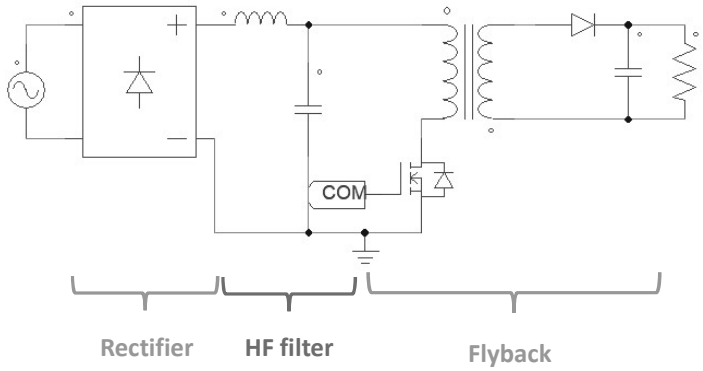

Example of RT7306 (LED driver)

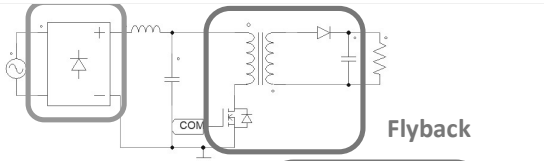

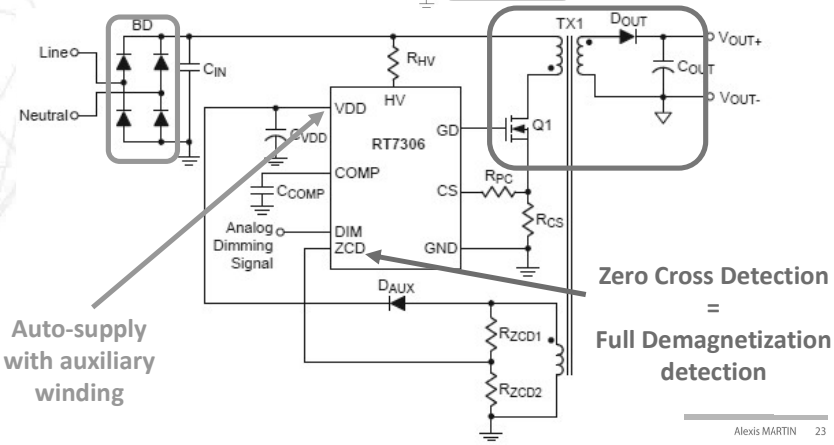

Example of RT7306: Functional Block Diagram

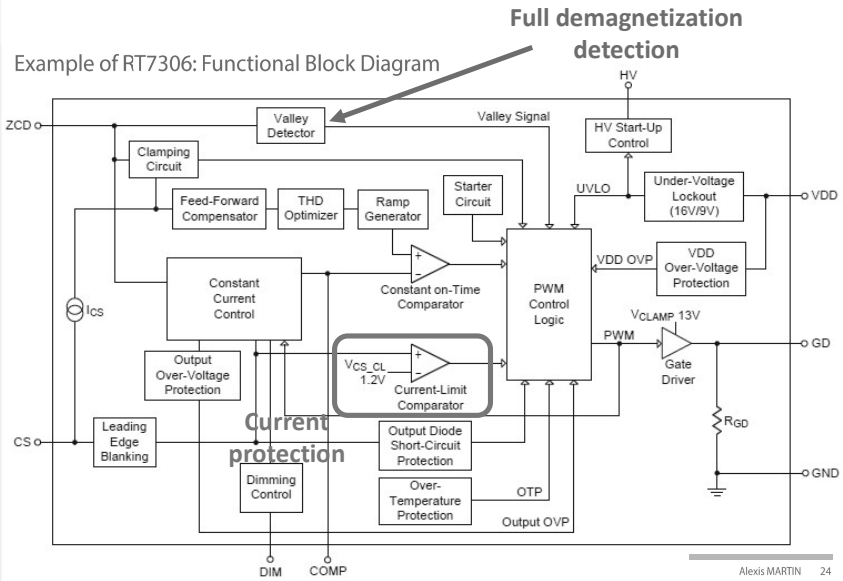

Hysteresis control

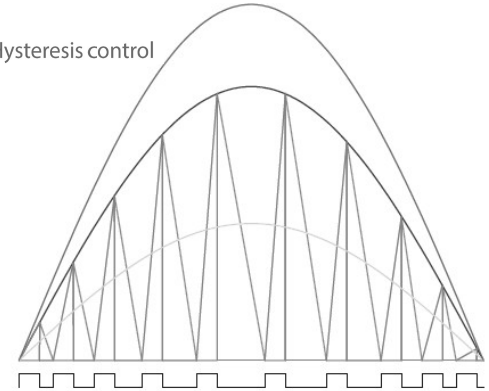

$$I_{L_PK} = \frac{V_{IN}}{L_m} \times t_{ON}$$

$$I_{L_PK} = \frac{V_{IN_PK} \times |\sin(\theta)| \times t_{ON}}{L_m}$$

V_{IN}	Input Voltage
I_{L_PK}	Peak Inductor Current
I_{Q1_DS}	MOSFET Current
I_{in_avg}	Average Input Current
I_{Do}	Output Diode Current
V_{Q1_GS}	MOSFET Gate Voltage

Constant on-time control

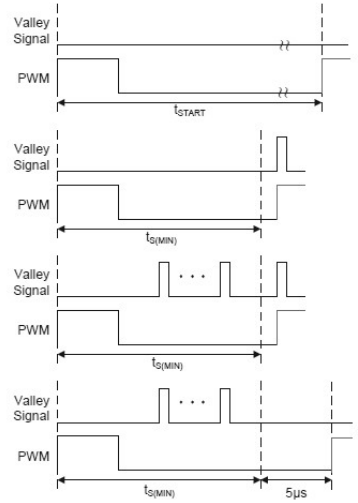

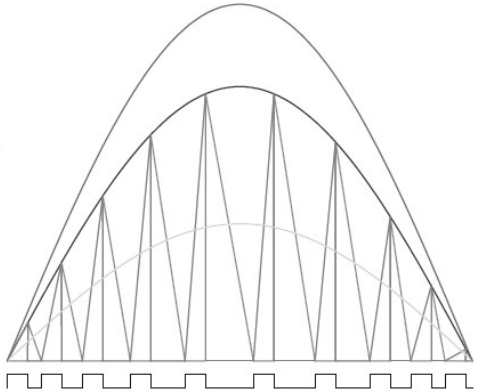

V_{IN}	Input Voltage
I_{L_PK}	Peak Inductor Current
I_{Q1_DS}	MOSFET Current
I_{in_avg}	Average Input Current
I_{Do}	Output Diode Current
V_{Q1_GS}	MOSFET Gate Voltage

Example of a full converter

Example: EVL400W-80PL

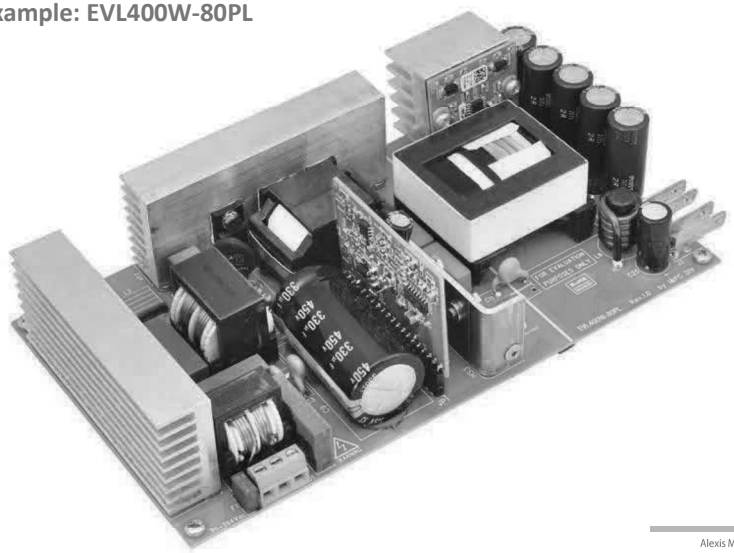

Example: EVL400W-80PL

The architecture is based on a two-stage approach: a front-end PFC pre-regulator based on a CCM (Continuous Conduction Mode) boost PFC controller using the L4985A, and a downstream LLC resonant half-bridge converter, designed around the L6699.

- Universal input mains voltage range: from 90 Vac to 264 Vac – frequency from 45 to 65 Hz
- Output voltage: 12 V at 33 A continuous operation
- Overall efficiency at full load: > 89%, according to ENERGY STAR® 6.1 limit for computer and compliant with 80Plus PLATINUM level
- Average efficiency: > 89%, according to European CoC ver. 5 Tier 2 for external power supplies
- Efficiency at 250 mW > 50%, compliant to EuP lot 6 Tier 2 limit for household and office equipment
- No load mains consumption: < 150 mW at 230 Vac, below European CoC ver. 5 Tier 2 limit for external power supplies
- Mains harmonics: meets EN-61000-3-2 Class-D and JEITA-MITI Class-D
- EMI: according to EN55022 Class-B
- Safety: meets EN60950 standards
- RoHS compliant

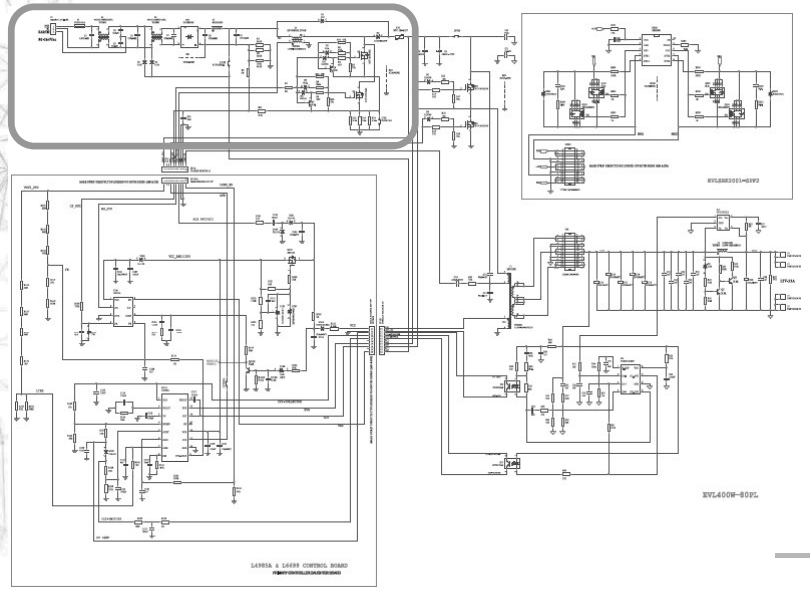

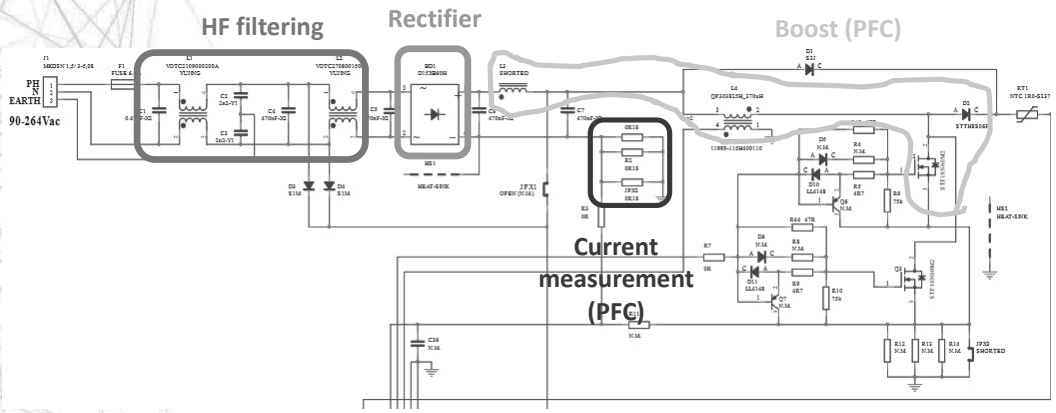

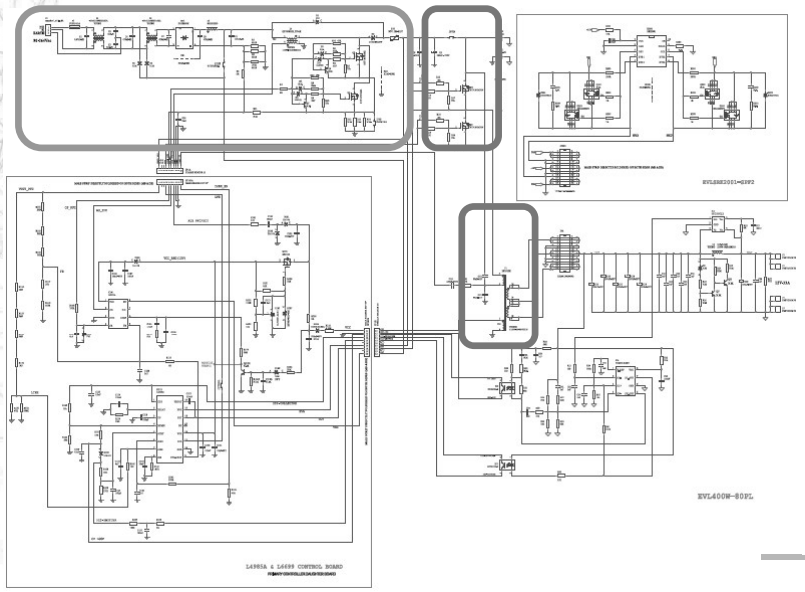

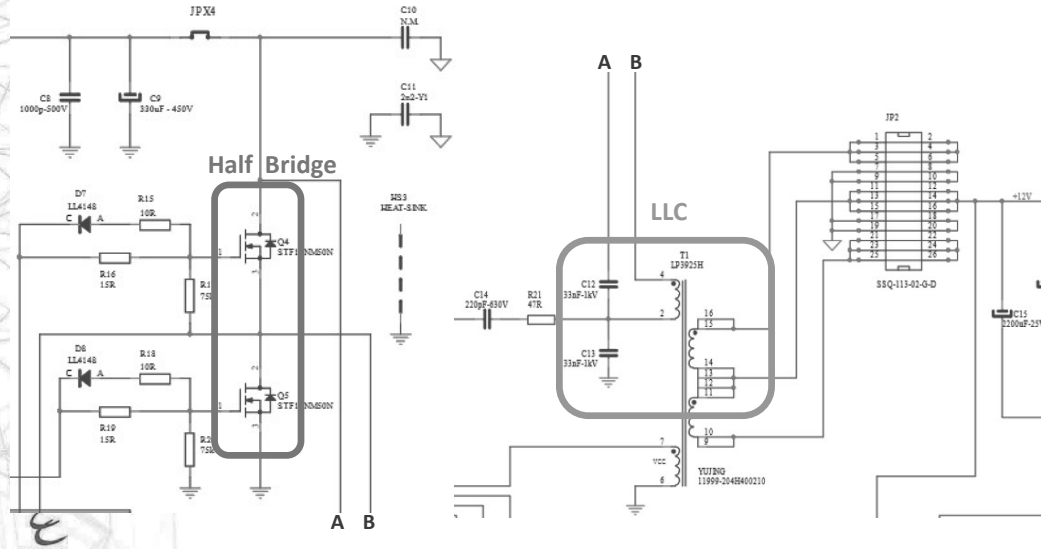

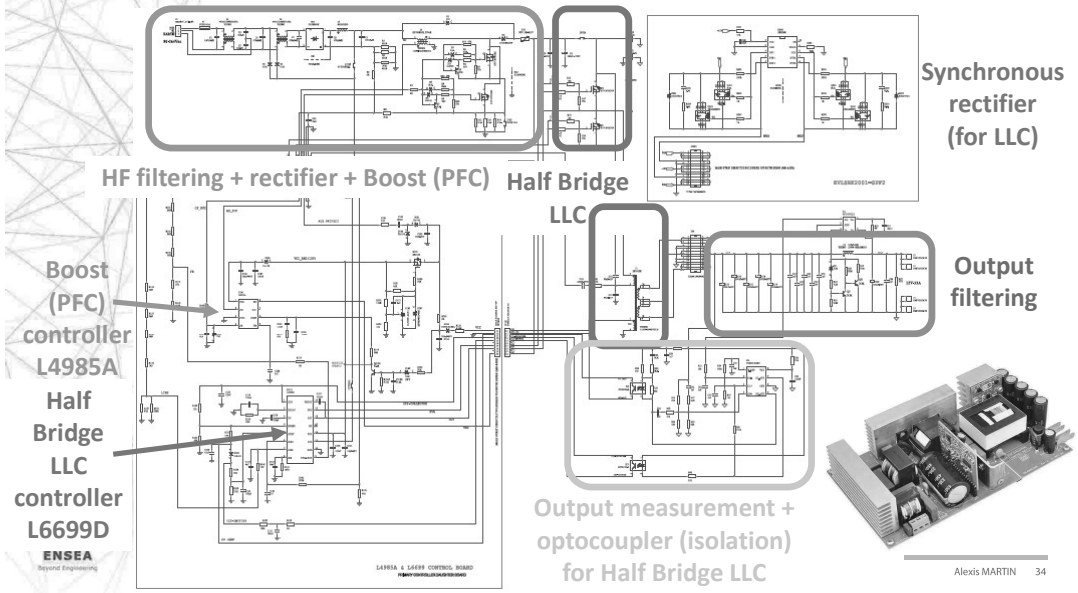

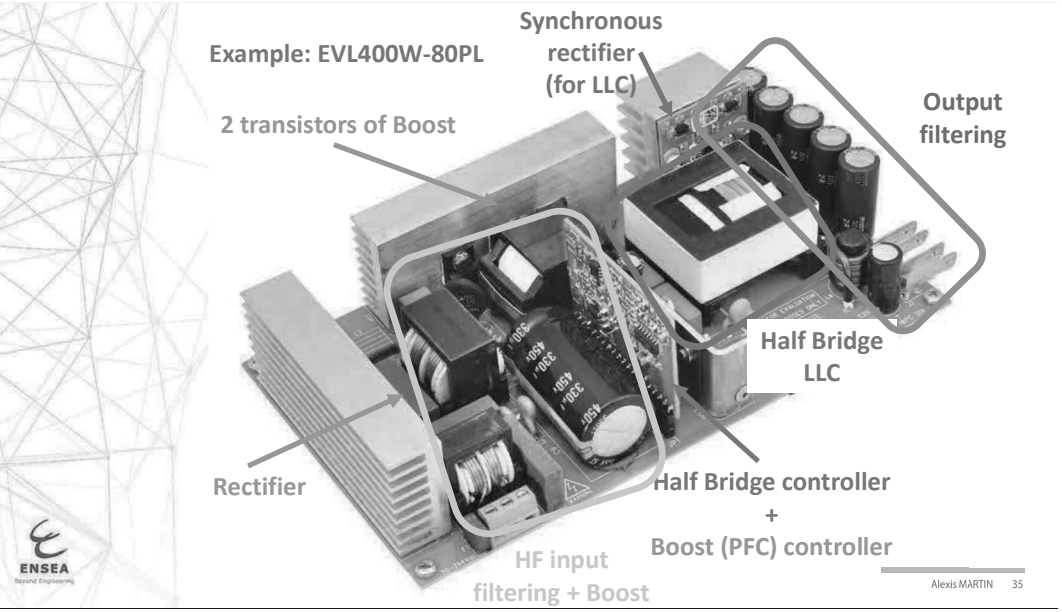
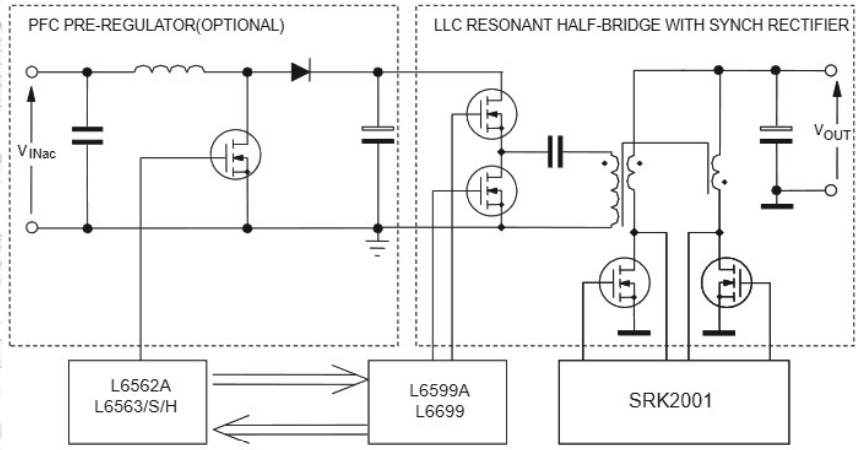
Example: EVL400W-80PL