ENSEA

Beyond Engineering

CONVERSION D'ENERGIE I

TD

Alexis MARTIN

2023

1 Alimentation d'un microprocesseur

On souhaite alimenter un microprocesseur STM32H4 à l'aide d'une batterie. Le cahier des charges est le suivant :

- Batterie LiPo 2S $V_{in} = 7.4\ V$
- Tension d'alimentation du microprocesseur : $V_{out} = 3.3\ V$
- Ondulation de tension max en entrée du microprocesseur : $\Delta V_S = 50\ mV$
- Courant nominal de sortie : $I_S = 200\ mA$
- Ondulation de courant : 30%

Pour cela, on souhaite utiliser le composant suivant : **LT1959** dont un extrait de la documentation est en annexe. On supposera dans cet exercice que les **composants sont parfaits**, et que le Buck fonctionne en régime de **conduction continue**.

1. **Étude du Buck**

   1.1 Tracer le circuit permettant d'utiliser ce composant en fonctionnement Buck (la valeur des composants passifs n'est pas demandée). Pour la broche 6 $\overline{SHDN}$, on supposera que le Buck est toujours en fonctionnement.

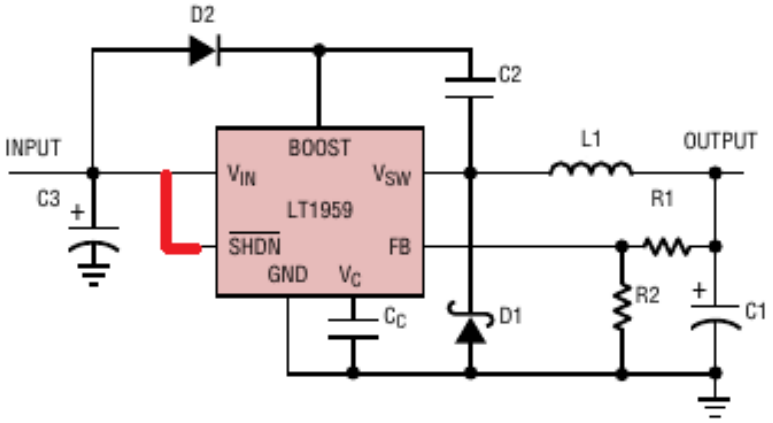

   1.2 On suppose que le processeur absorbe un courant I_s constant égal au courant nominal et que la tension de sortie est constante (on néglige l'ondulation de la tension de sortie). Tracer l'allure de la tension V_{SW} en sortie du composant **LT1959**, la tension V_{ce} aux bornes du transistor Q_1 et le courant I_L dans l'inductance de

sortie. En déduire la relation entre la tension d'entrée V_{in}, V_{out} et le rapport cyclique α du hacheur.

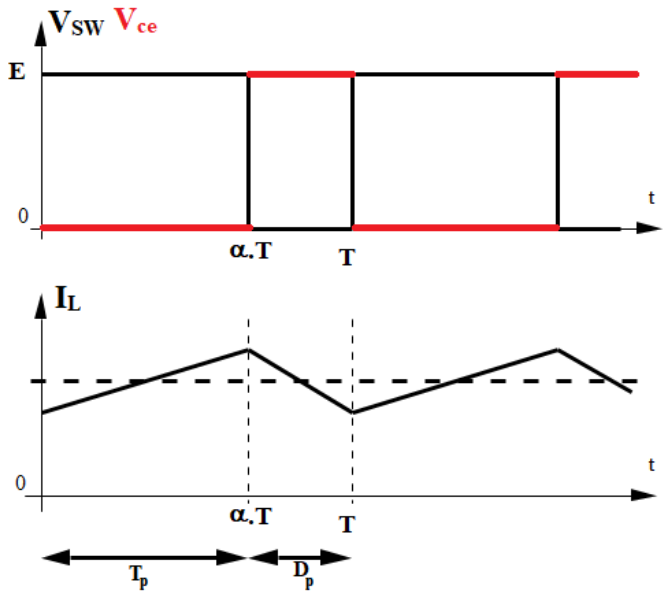

$$V_{out} =< V_{SW} >= \alpha V_{in}$$

1.3 Si la tension de sortie est bien régulée, quelle sera la valeur du rapport cyclique α_n imposé par le **LT1959** ?

$$\alpha = \frac{V_{out}}{V_{in}} = \frac{3.3}{7.4} \approx 0.45$$

1.4 Justifier que ce composant est adapté au cahier des charges. Peut-on utiliser une batterie LiPo 1S $(3.7V)$ à la place de la LiPo 2S ?

Tension d'entrée min : 4 V $\rightarrow V_{in} > 4\ V$

Tension de sortie min : 1.21 V $\rightarrow V_{out} > 1.21\ V$

Courant de commutation max : 4.5 A $\rightarrow$ Courant à commuter :
$I_S + \Delta I_s/2 = 0.2 + 0.2 * 0.15 = 0.23 < 4.5\ A$

LiPo 1S : $3.7\ V < 4\ V$ $\rightarrow$ ne peut pas fonctionner directement avec ce composant

1.5 A partir de la documentation, quelle est la fréquence de découpage du hacheur ?

$$f_{SW} = 500\ kHz$$

1.6 Calculer l'ondulation de courant ΔI_L dans l'inductance de sortie, en fonction de l'inductance L_1 placée. En déduire la valeur de l'inductance afin de respecter le cahier des charges.

$$\text{Entre 0 et } \alpha T : V_L = V_{in} - V_{out} = L\frac{dI_L}{dt} \rightarrow \Delta I_L = (V_{in} - Vout).\frac{\alpha T}{L}$$

$$\Delta I_L = \frac{\alpha.(1-\alpha).V_{in}.T}{L}$$

$$L > 61\mu H$$

1.7 Tracer la tension de sortie en tenant compte de l'ondulation de tension. Calculer la valeur du condensateur de sortie C_1 à choisir afin de respecter le cahier des charges.

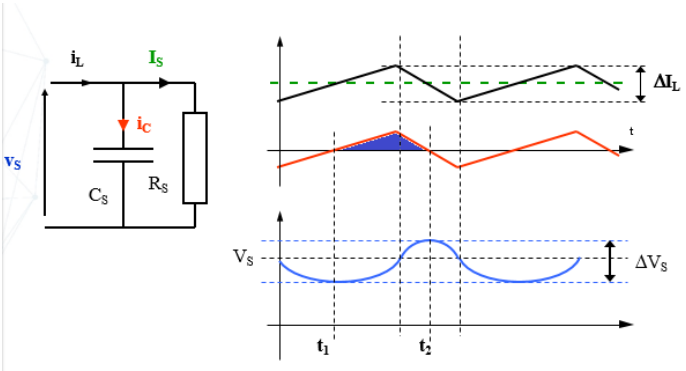

$$t_1 = \frac{\alpha.T}{2} \qquad t_2 = \frac{(1+\alpha).T}{2}$$

$$\Delta V_C = \frac{1}{C_1}\int_{t_1}^{t_2} i_C(t).dt = \frac{1}{C_1}.\frac{1}{2}.\frac{\Delta I_S}{2}.(t_2 - t_1)$$

$$\rightarrow C_S = \frac{\alpha.(1-\alpha).V_{in}}{8.f_{SW}^2.L.\Delta V_S} = 300\ nF$$

1.8 Que se passe-t-il si le microprocesseur consomme peu de courant (mode veille par exemple) ?

Conduction discontinue $\rightarrow$ si α est fixe, V_S augmente (potentiellement jusqu'à $V_{in} = 7.4\ V$ si le processeur ne consomme aucun courant)

2. **Etude de la commande**

Dans cette partie, on s'intéresse à la commande du Buck. Pour cela, on utilise le schéma simplifié suivant :

Le signal en dent de scie évolue entre 0 et 2 V, avec une fréquence égale à la fréquence de découpage du hacheur.

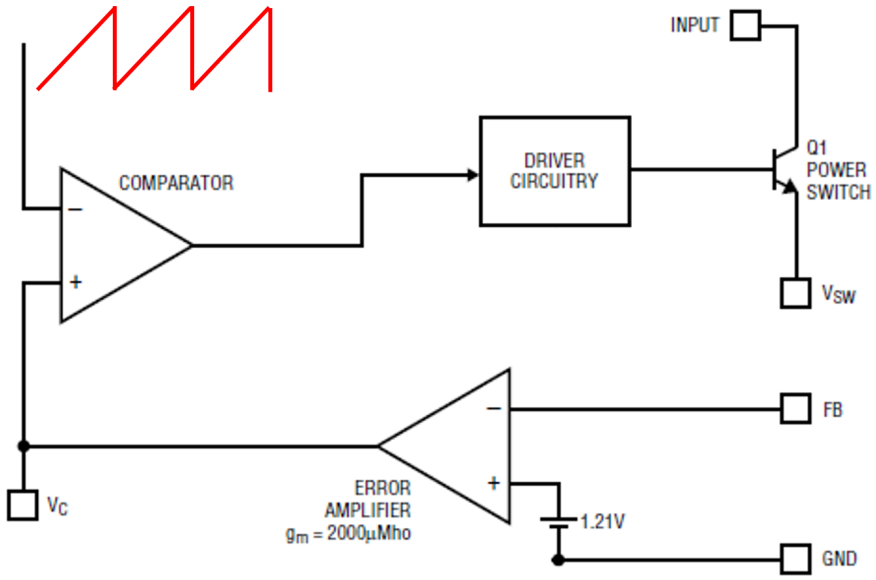

Figure 1.1: Simplified internal control

2.1 Choisir les valeurs des résistances à connecter sur la broche *FB* afin d'avoir la tension de sortie demandée. On utilisera pour cela les valeurs de résistances de la série E12.

(Valeurs de la série E12 : 100, 120, 150, 180, 220, 270, 330, 390, 470, 560, 680, 820).

$$\text{Pont diviseur de tension : } \frac{R_2}{R_1 + R_2} = \frac{1.21}{3.3} \rightarrow R_1 \approx 1.73.R_2$$

$$R_1 = 470\ k\Omega \qquad R_2 = 270\ k\Omega$$

2.2 Pour une tension $V^+ = 0.5V$ à l'entrée du comparateur, tracer le signal en sortie du comparateur. En déduire l'expression qui lie la tension V^+ du comparateur et la valeur du rapport cyclique α du hacheur.

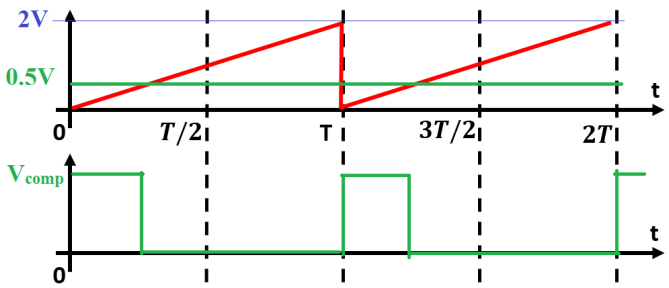

$$V^+ = 2.\alpha$$

On modélise le convertisseur asservi avec le schéma bloc suivant :

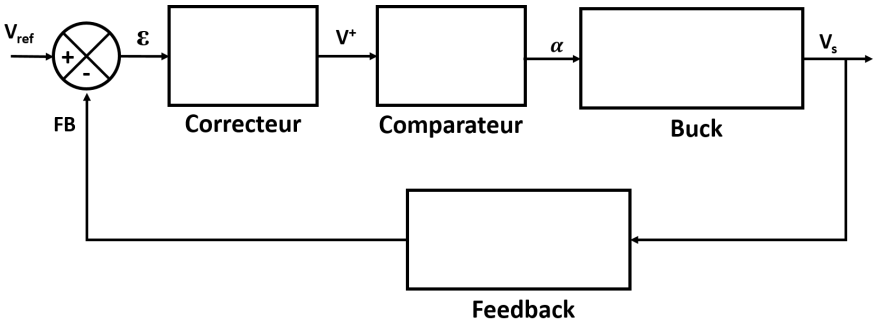

Figure 1.2: Global bloc diagramm

2.3 Compléter le bloc "*Comparateur*". A l'aide de la partie 1, compléter le bloc "*Feedback*"

Le bloc "*Buck*" est modélisé par un gain statique K correspondant à $\frac{V_{s\ moy}}{\alpha}$ et une fonction de transfert correspondant au filtre de sortie de Buck. La résistance R_m symbolise l'impédance d'entrée du microcontrôleur.

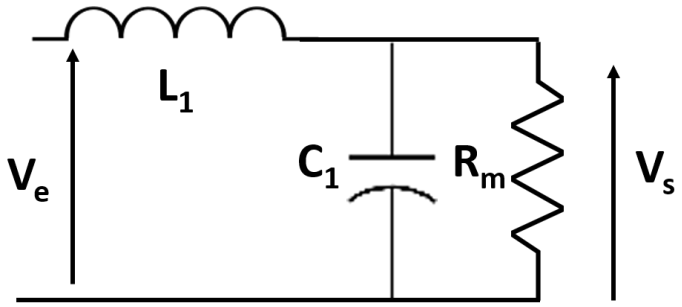

Figure 1.3: Equivalent schematic of the Buck

2.4 Rappeler les valeurs de L et C déterminées à la partie. Déterminer la valeur de R_m lorsque le microcontrôleur absorbe le courant nominal.

$$L = 61\ \mu H \qquad C = 300\ nF$$

$$R_m = \frac{V_{out}}{I_S} = 16.5\ \Omega$$

2.5 Déterminer la fonction de transfert correspondant au bloc "*Buck*".

$$\frac{V_s}{V_e} = \frac{1}{1 + j.\frac{L_1}{R_m}.\omega - L_1.C_1.\omega^2}$$

Fonction de transfert du Buck : $\frac{V_s}{\alpha} = \frac{V_{in}}{1 + j.\frac{L_1}{R_m}.\omega - L_1.C_1.\omega^2}$

2.6 On place sur la broche V_c un circuit RC série. On suppose que le courant en entrée du comparateur est nul (haute impédance d'entrée). Le bloc "*Correcteur*" est donc un proportionnel intégral de la forme $C(p) = K_p(1 + \frac{1}{T_i.p})$. Déterminer les valeurs de K_p et T_i en fonction de R, C et g_m.

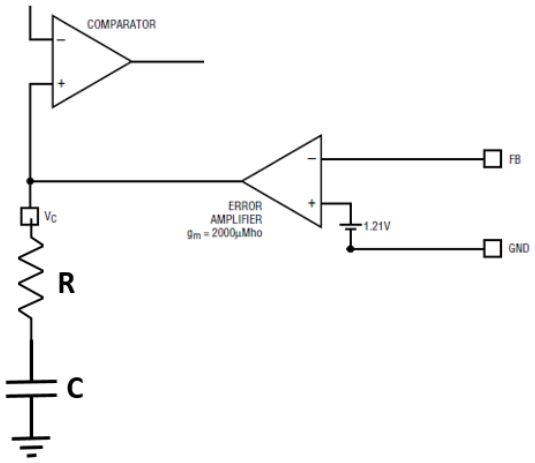

$$V^+(j\omega) = (R + \frac{1}{j.C.\omega}).I(j\omega) = (R + \frac{1}{j.C.\omega}).g_m.\epsilon(j\omega)$$

$$\frac{V^+}{\epsilon} = (R + \frac{1}{j.C.\omega}).g_m = R.g_m.(1 + \frac{1}{j.R.C.\omega})$$

$$K_p = R.g_m \qquad T_i = R.C$$

2.7 Calculer R afin que le rapport cyclique au démarrage soit environ égal à $\frac{\alpha_n}{2}$ et C pour avoir une constante de temps du correcteur 10 fois supérieure à la constante de temps du système non corrigé.

Au démarrage : $V_{FB} = 0$ et le condensateur est déchargé :

$$V^+ = R.g_m.\epsilon = 1.2R.g_m$$

$$\alpha = 0.5 * 1.2R.g_m \rightarrow R = \frac{\alpha}{0.6g_m} = 186\Omega$$

Constante de temps du correcteur :

$$T_i = R.C > 10\sqrt{L_1.C_1} \rightarrow C > \frac{10}{R}.\sqrt{L_1.C_1} = 230\ nF$$

2.8 En régime établi, déterminer le courant de sortie de l'ampli d'erreur et les tensions aux bornes de R, C et V_c. En déduire le rapport cyclique et comparer au résultat du 1.3.

Quand t$-> \infty$, $\epsilon -> 0$ (thérome de la valeure finale) donc le courant de sortie de l'ampli est nul.

On a donc $V_{FB} = 1.21\ V$ soit $V_{out} = 3.3\ V$ comme désiré.

De même, théorme de la valeure finale, α tend vers $\frac{R_1 + R_2}{R_2}.\frac{V_{ref}}{V_{in}} = 0.44$

LT1959

4.5A, 500kHz Step-Down Switching Regulator

FEATURES

- **Operates with Input as Low as 4V**
- **Output Range Down to 1.21V**
- **Constant 500kHz Switching Frequency**
- **Uses All Surface Mount Components**
- **Inductor Size Reduced to 1.8µH**
- Saturating Switch Design: 0.07Ω
- Shutdown Current: 15µA
- Easily Synchronizable
- Cycle-by-Cycle Current Limiting
- 4.5A Switch
- Current Mode Control

APPLICATIONS

- Portable Computers
- Battery-Powered Systems
- Battery Chargers
- Distributed Power
- 5V to 3.3V Conversion
- 5V to 2.5V Conversion
- 5V to 1.8V Conversion

DESCRIPTION

The LT®1959 is a 500kHz monolithic buck mode switching regulator functionally identical to the LT1506 but optimized for lower output voltage applications. It will operate down to 1.21V output compared to 2.42V for the LT1506. A 4.5A switch is included on the die along with all the necessary oscillator, control and logic circuitry. High switching frequency allows a considerable reduction in the size of external components. The topology is current mode for fast transient response and good loop stability.

A special high speed bipolar process and new design techniques achieve high efficiency at high switching frequency. Efficiency is maintained over a wide output current range by keeping quiescent supply current to 3.8mA and by utilizing a supply boost capacitor to saturate the power switch.

The LT1959 fits into standard 7-pin DD and fused lead SO-8 packages. Full cycle-by-cycle short-circuit protection and thermal shutdown are provided. Standard surface mount external parts are used, including the inductor and capacitors. There is the optional function of shutdown or synchronization. A shutdown signal reduces supply current to 15µA. Synchronization allows an external logic level signal to increase the internal oscillator from 580kHz to 1MHz.

LT, LTC and LT are registered trademarks of Linear Technology Corporation.

TYPICAL APPLICATION

5V to 1.8V Down Converter

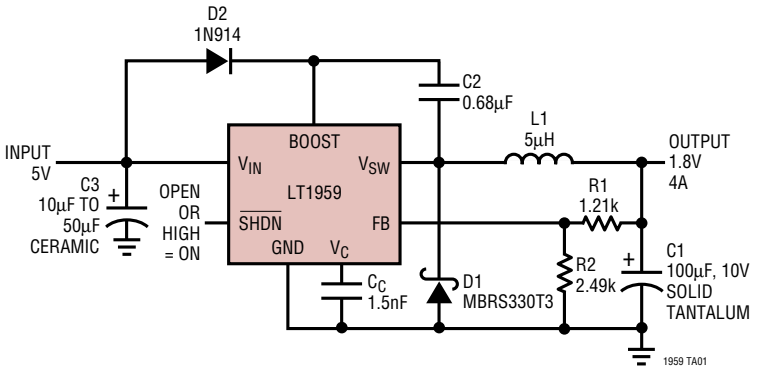

Efficiency vs Load Current

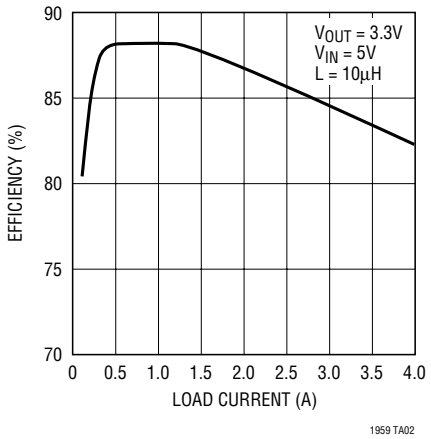

ABSOLUTE MAXIMUM RATINGS (Note 1)

Input Voltage 16V
BOOST Voltage 30V
BOOST Pin Above Input Voltage 15V
SHDN Pin Voltage 7V
FB Pin Voltage 3.5V
FB Pin Current 1mA
SYNC Pin Voltage 7V
Operating Junction Temperature Range
LT1959C ..... 0°C to 125°C
LT1959I ..... –40°C to 125°C
Storage Temperature Range ..... –65°C to 150°C
Lead Temperature (Soldering, 10 sec) ..... 300°C

PACKAGE/ORDER INFORMATION

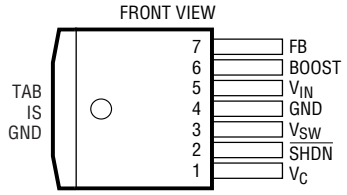

R PACKAGE
7-LEAD PLASTIC DD

T_{JMAX} = 150°C, θ_{JA} = 30°C/W
WITH PACKAGE SOLDERED TO 0.5 SQUARE INCH COPPER AREA OVER BACKSIDE GROUND PLANE OR INTERNAL POWER PLANE. θ_{JA} CAN VARY FROM 20°C/W TO >40°C/W DEPENDING ON MOUNTING TECHNIQUES

ORDER PART NUMBER

LT1959CR
LT1959IR

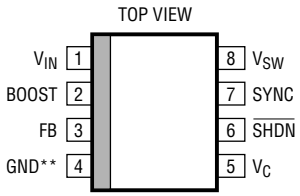

S8 PACKAGE
8-LEAD PLASTIC SO

T_{JMAX} = 150°C, θ_{JA} = 80°C/W
**WITH (FUSED GND) GROUND PIN CONNECTED TO GROUND PLANE OR LARGE LANDS

ORDER PART NUMBER

LT1959CS8
LT1959IS8

S8 PART MARKING

1959
1959I

ELECTRICAL CHARACTERISTICS

The ● denotes the specifications which apply over the full operating temperature range, otherwise specifications are at T_A = 25°C, T_J = 25°C, V_{IN} = 5V, V_C = 1.5V, Boost = V_{IN} + 5V, switch open, unless otherwise noted.

PARAMETER	CONDITIONS		MIN	TYP	MAX	UNITS
Feedback Voltage (Adjustable)	All Conditions	●	1.19	1.21	1.23	V
Reference Voltage Line Regulation	4.3V ≤ V_{IN} ≤ 15V			0.01	0.03	%/V
Feedback Input Bias Current		●	–0.5	0	0.5	µA
Error Amplifier Voltage Gain	(Note 2)		200	400		
Error Amplifier Transconductance	ΔI (V_C) = ±10µA		1500	2000	2700	µMho
		●	1000		3100	µMho
V_C Pin to Switch Current Transconductance				5.3		A/V
Error Amplifier Source Current	V_{FB} = 1.05V	●	140	225	320	µA
Error Amplifier Sink Current	V_{FB} = 1.35V	●	140	225	320	µA
V_C Pin Switching Threshold	Duty Cycle = 0			0.9		V
V_C Pin High Clamp				2.1		V
Switch Current Limit	V_C Open, V_{FB} = 1.05V, DC ≤ 50%	●	4.5	6	8.5	A
Slope Compensation	DC = 80%			0.8		A

ELECTRICAL CHARACTERISTICS

The ● denotes the specifications which apply over the full operating temperature range, otherwise specifications are at T_A = 25°C, T_J = 25°C, V_{IN} = 5V, V_C = 1.5V, Boost = V_{IN} + 5V, switch open, unless otherwise noted.

PARAMETER	CONDITIONS		MIN	TYP	MAX	UNITS
Switch On Resistance (Note 7)	I_{SW} = 4.5A			0.07	0.1	Ω
		●			0.13	Ω
Maximum Switch Duty Cycle	V_{FB} = 1.05V		90	93		%
		●	86	93		%
Switch Frequency	V_C Set to Give 50% Duty Cycle		460	500	540	kHz
		●	440		560	kHz
Switch Frequency Line Regulation	4.3V ≤ V_{IN} ≤ 15V	●		0	0.15	%/V
Frequency Shifting Threshold on FB Pin	Δf = 10kHz	●	0.5	0.7	1.0	V
Minimum Input Voltage (Note 3)		●		4.0	4.3	V
Minimum Boost Voltage (Note 4)	I_{SW} ≤ 4.5A	●		2.3	3.0	V
Boost Current (Note 5)	I_{SW} = 1A	●		20	35	mA
	I_{SW} = 4.5A	●		90	140	mA
Input Supply Current (Note 6)		●		3.8	5.4	mA
Shutdown Supply Current	$V_{\overline{SHDN}}$ = 0V, V_{SW} = 0V, V_C Open			15	50	µA
		●			75	µA
Lockout Threshold	V_C Open	●	2.3	2.38	2.46	V
Shutdown Thresholds	V_C Open Device Shutting Down	●	0.13	0.37	0.60	V
	Device Starting Up	●	0.25	0.45	0.7	V
Synchronization Threshold		●		1.5	2.2	V
Synchronizing Range			580		1000	kHz
SYNC Pin Input Resistance				40		kΩ

Note 1: Absolute Maximum Ratings are those values beyond which the life of a device may be impaired.

Note 2: Gain is measured with a V_C swing equal to 200mV above the switching threshold level to 200mV below the upper clamp level.

Note 3: Minimum input voltage is not measured directly, but is guaranteed by other tests. It is defined as the voltage where internal bias lines are still regulated so that the reference voltage and oscillator frequency remain constant. Actual minimum input voltage to maintain a regulated output will depend on output voltage and load current. See Applications Information.

Note 4: This is the minimum voltage across the boost capacitor needed to guarantee full saturation of the internal power switch.

Note 5: Boost current is the current flowing into the boost pin with the pin held 5V above input voltage. It flows only during switch on time.

Note 6: Input supply current is the bias current drawn by the input pin with switching disabled.

Note 7: Switch on resistance is calculated by dividing V_{IN} to V_{SW} voltage by the forced current (4.5A). See Typical Performance Characteristics for the graph of switch voltage at other currents.

TYPICAL PERFORMANCE CHARACTERISTICS

Minimum Input Voltage with 3.3V Output

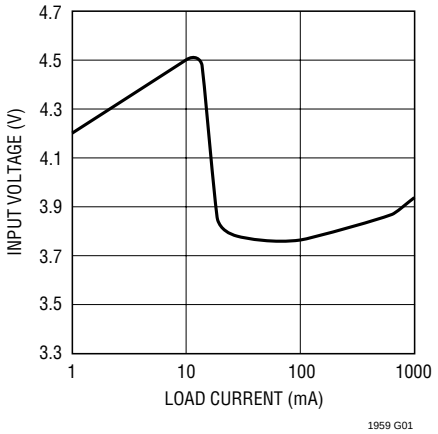

Switch Peak Current Limit

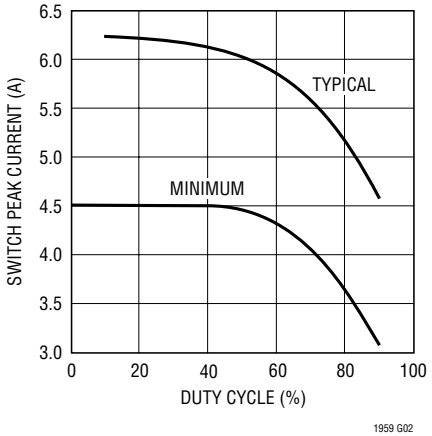

Feedback Pin Voltage

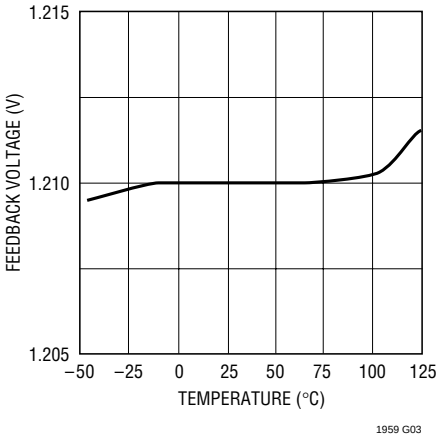

Shutdown Pin Bias Current

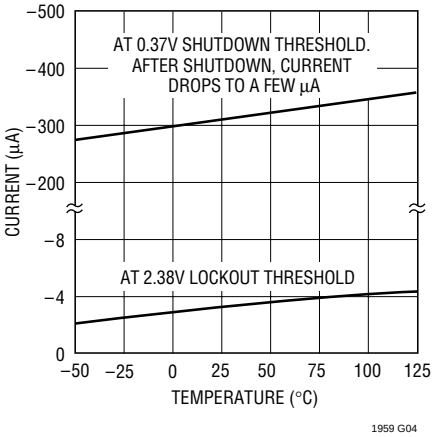

Lockout and Shutdown Thresholds

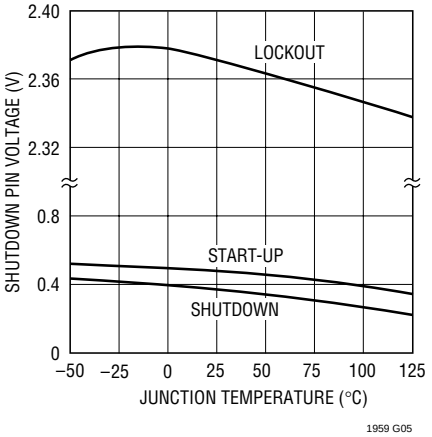

Shutdown Supply Current

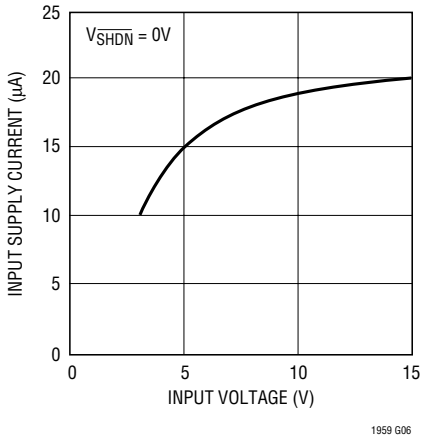

Shutdown Supply Current

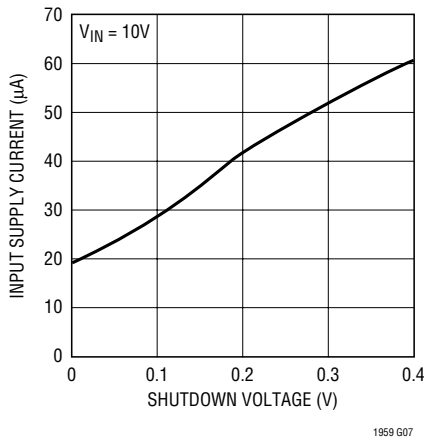

Error Amplifier Transconductance

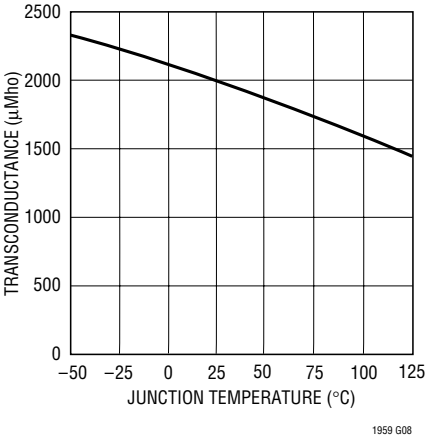

Error Amplifier Transconductance

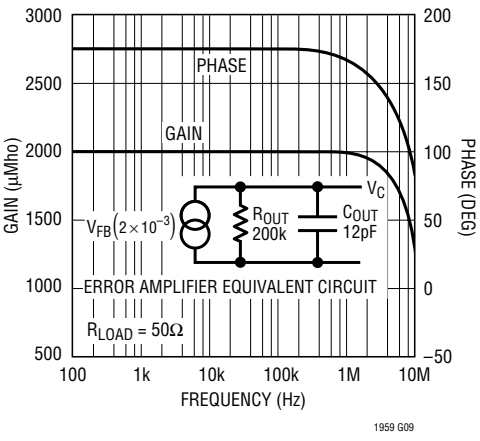

PIN FUNCTIONS

FB: The feedback pin is used to set output voltage using an external voltage divider that generates 1.21V at the pin with the desired output voltage. Three additional functions are performed by the FB pin. When the pin voltage drops below 0.8V, switch current limit is reduced. Below 0.7V the external sync function is disabled and switching frequency is reduced. See Feedback Pin Function section in Applications Information for details.

BOOST: The BOOST pin is used to provide a drive voltage, higher than the input voltage, to the internal bipolar NPN power switch. Without this added voltage, the typical switch voltage loss would be about 1.5V. The additional boost voltage allows the switch to saturate and voltage loss approximates that of a 0.07Ω FET structure, but with much smaller die area. Efficiency improves from 75% for conventional bipolar designs to > 89% for these new parts.

V_{IN}: This is the collector of the on-chip power NPN switch. This pin powers the internal circuitry and internal regulator. At NPN switch on and off, high dI/dt edges occur on this pin. Keep the external bypass and catch diode close to this pin. All trace inductance on this path will create a voltage spike at switch off, adding to the V_{CE} voltage across the internal NPN.

GND: The GND pin connection needs consideration for two reasons. First, it acts as the reference for the regulated output, so load regulation will suffer if the "ground" end of the load is not at the same voltage as the GND pin of the IC. This condition will occur when load current or other currents flow through metal paths between the GND pin and the load ground point. Keep the ground path short between the GND pin and the load and use a ground plane when possible. The second consideration is EMI caused by GND pin current spikes. Internal capacitance between the V_{SW} pin and the GND pin creates very narrow (<10ns) current spikes in the GND pin. If the GND pin is connected to system ground with a long metal trace, this trace may radiate excess EMI. Keep the path between the input bypass and the GND pin short. The GND pin of the SO-8 package is directly attached to the internal tab. This pin should be attached to a large copper area to improve thermal resistance.

V_{SW}: The switch pin is the emitter of the on-chip power NPN switch. This pin is driven up to the input pin voltage during switch on time. Inductor current drives the switch pin negative during switch off time. Negative voltage is clamped with the external catch diode. Maximum negative switch voltage allowed is –0.8V.

SYNC: (S08 Package Only) The sync pin is used to synchronize the internal oscillator to an external signal. It is directly logic compatible and can be driven with any signal between 10% and 90% duty cycle. The synchronizing range is equal to *initial* operating frequency, up to 1MHz. See Synchronizing section in Applications Information for details. When not in use, this pin should be grounded.

$\overline{SHDN}$: The shutdown pin is used to turn off the regulator and to reduce input drain current to a few microamperes. Actually, this pin has two separate thresholds, one at 2.38V to disable switching, and a second at 0.4V to force complete micropower shutdown. The 2.38V threshold functions as an accurate undervoltage lockout (UVLO). This is sometimes used to prevent the regulator from operating until the input votlage has reached a predetermined level.

V_C: The V_C pin is the output of the error amplifier and the input of the peak switch current comparator. It is normally used for frequency compensation, but can do double duty as a current clamp or control loop override. This pin sits at about 1V for very light loads and 2V at maximum load. It can be driven to ground to shut off the regulator, but if driven high, current must be limited to 4mA.

BLOCK DIAGRAM

The LT1959 is a constant frequency, current mode buck converter. This means that there is an internal clock and two feedback loops that control the duty cycle of the power switch. In addition to the normal error amplifier, there is a current sense amplifier that monitors switch current on a cycle-by-cycle basis. A switch cycle starts with an oscillator pulse which sets the R_S flip-flop to turn the switch on. When switch current reaches a level set by the inverting input of the comparator, the flip-flop is reset and the switch turns off. Output voltage control is obtained by using the output of the error amplifier to set the switch current trip point. This technique means that the error amplifier commands current to be delivered to the output rather than voltage. A voltage fed system will have low phase shift up to the resonant frequency of the inductor and output capacitor, then an abrupt 180° shift will occur. The current fed system will have 90° phase shift at a much lower frequency, but will not have the additional 90° shift until well beyond the LC resonant frequency. This makes it much easier to frequency compensate the feedback loop and also gives much quicker transient response.

High switch efficiency is attained by using the BOOST pin to provide a voltage to the switch driver which is higher than the input voltage, allowing switch to be saturated. This boosted voltage is generated with an external capacitor and diode. Two comparators are connected to the shutdown pin. One has a 2.38V threshold for undervoltage lockout and the second has a 0.4V threshold for complete shutdown.

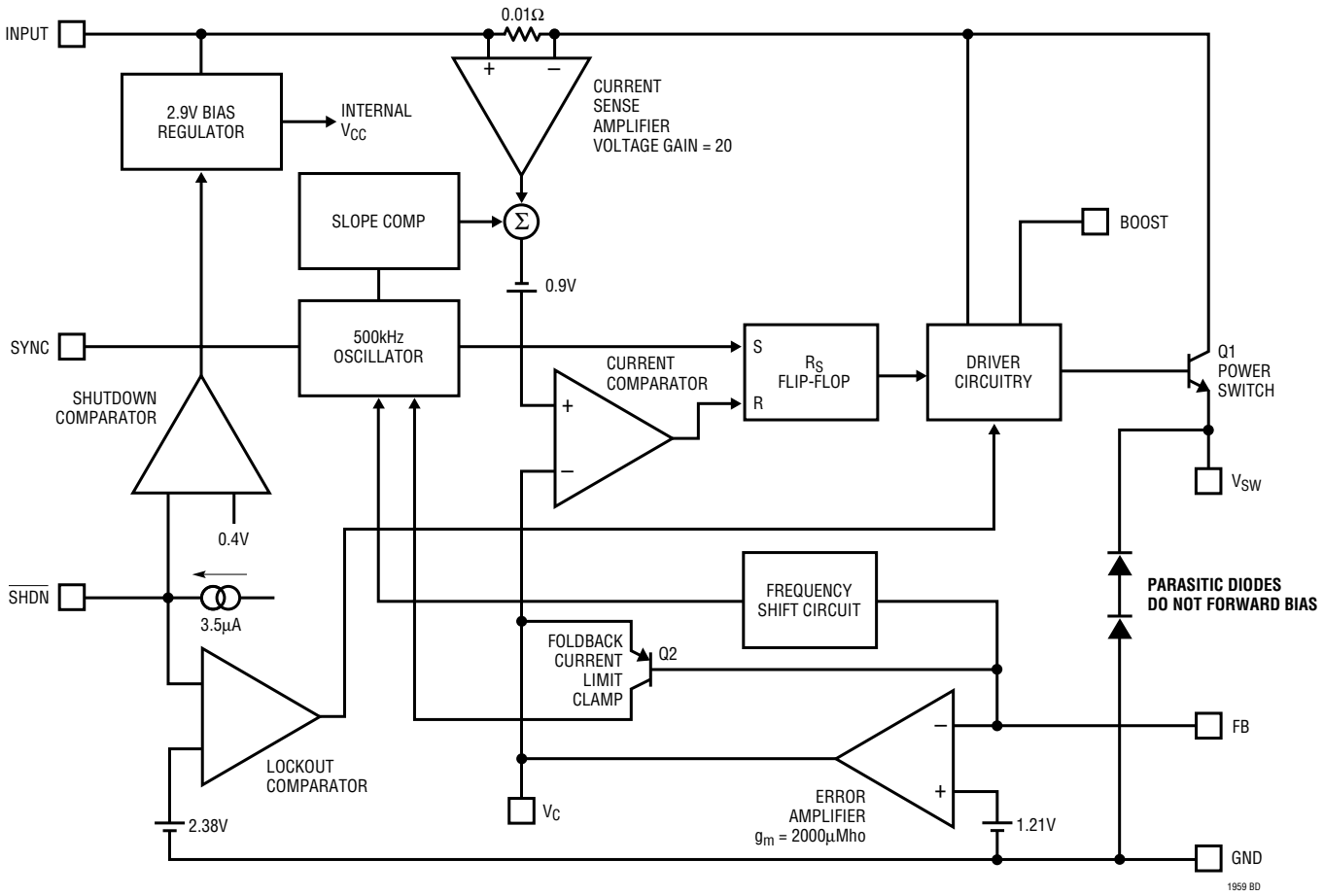

Figure 1. Block Diagram