ENSEA

Beyond Engineering

POWER ELECTRONICS

DEE_2401

TD

Alexis MARTIN

2025

1 Microprocessor power supply

We want to power an STM32H4 microprocessor using a battery. The specifications are as follows:

- LiPo 2S battery $V_{in} = 7.4\ V$
- Microprocessor supply voltage: $V_{out} = 3.3\ V$
- Maximum voltage ripple at the microprocessor input: $\Delta V_S = 50\ mV$
- Output nominal current: $I_S = 200\ mA$
- Current ripple: 30%

To achieve this, we want to use the following component: **LT1959**, an excerpt of the documentation is attached. In this exercise, we assume that the **components are ideal**, and that the Buck operates in **continuous conduction** mode.

1. **Buck Study**

   1.1 Draw the circuit to use this component in Buck operation (the values of the passive components are not required). For pin 6 $\overline{SHDN}$, assume that the Buck is always operational.

   1.2 We assume that the processor draws a constant current I_s equal to the nominal current and that the output voltage is constant (we neglect the output voltage ripple). Plot the waveform of the voltage V_{SW} at the output of the **LT1959** component, the output current I_{SW}, the voltage V_{ce} across the transistor Q_1, and the current I_L through the output inductor. Deduce the relationship between the input voltage V_{in}, V_{out}, and the duty cycle α of the converter.

   1.3 If the output voltage is well regulated, what will be the value of the duty cycle α_n imposed by the **LT1959**?

   1.4 Justify that this component is suitable for the specifications. Can we use a LiPo 1S battery ($3.7V$) instead of the LiPo 2S?

   1.5 Based on the documentation, what is the switching frequency of the converter?

   1.6 Calculate the current ripple ΔI_L through the output inductor, as a function of the inductance L_1 used. Deduce the value of the inductance to meet the specifications.

   1.7 Plot the output voltage taking into account the voltage ripple. Calculate the value of the output capacitor C_1 to choose in order to meet the specifications.

1.8 What happens if the microprocessor consumes very little current (e.g., sleep mode)?

2. **Control Study**

In this part, we are interested in the control of the Buck converter. For this purpose, we use the following simplified schematic:

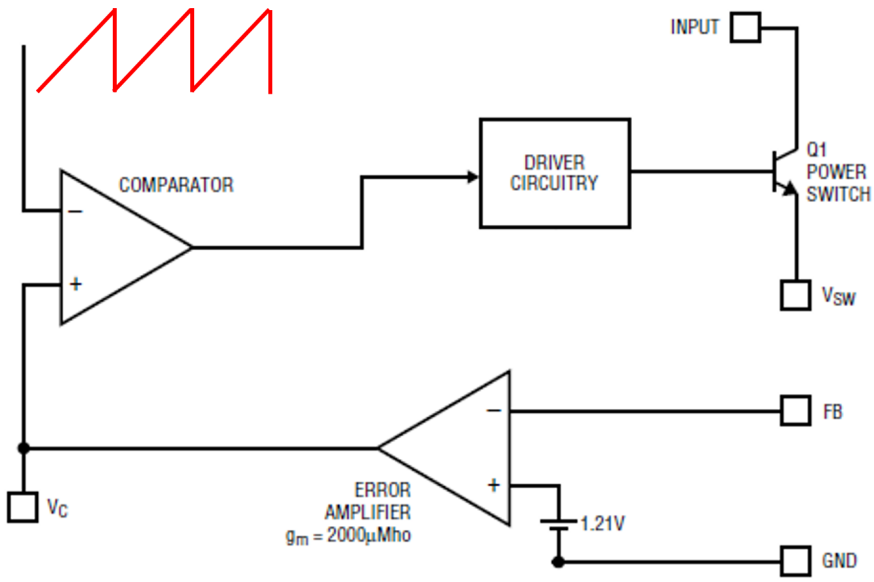

Figure 1.1: Simplified internal control

The sawtooth signal varies between 0 and 2 V, with a frequency equal to the switching frequency of the converter.

2.1 Choose the values of the resistors to be connected to the *FB* pin in order to obtain the desired output voltage. Use the resistor values from the E12 series.

(E12 series values: 100, 120, 150, 180, 220, 270, 330, 390, 470, 560, 680, 820).

2.2 For an input voltage $V^+ = 0.5V$ at the comparator input, plot the output signal of the comparator. Deduce the expression that relates the comparator voltage V^+ and the duty cycle α of the converter.

The controlled converter is modeled with the following block diagram:

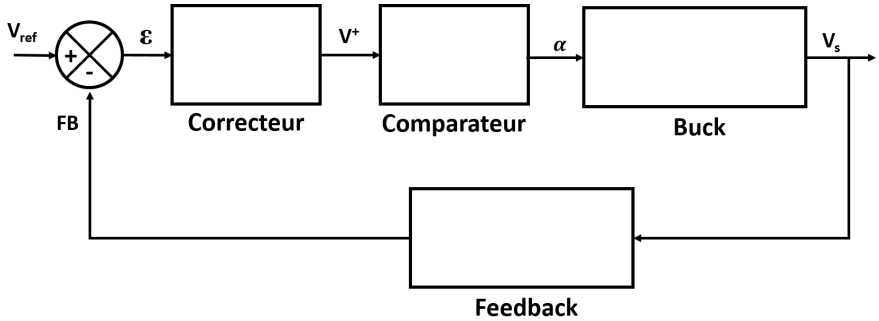

Figure 1.2: Global block diagram

2.3 Complete the "*Comparator*" block. Using part 1, complete the "*Feedback*" block.

The "*Buck*" block is modeled by a static gain K corresponding to $\frac{V_{s\ avg}}{\alpha}$ and a transfer function corresponding to the Buck output filter. The resistance R_m represents the input impedance of the microcontroller.

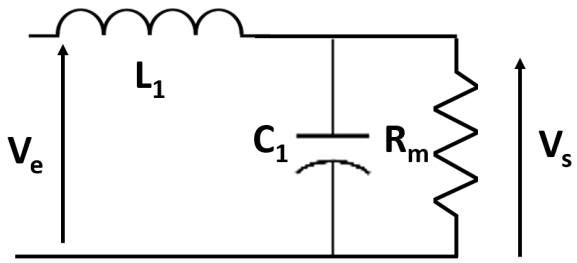

Figure 1.3: Equivalent schematic of the Buck

2.4 Recall the values of L and C determined in part 1. Determine the value of R_m when the microcontroller draws the nominal current.

2.5 Determine the transfer function corresponding to the "*Buck*" block.

2.6 A series RC circuit is placed on the V_c pin. We assume that the input current of the comparator is zero (high input impedance). Therefore, the "*Corrector*" block is a proportional integral controller of the form $C(p) = K_p(1 + \frac{1}{T_i.p})$. Determine the values of K_p and T_i in terms of R, C, and g_m.

2.7 Calculate R so that the duty cycle at startup is approximately equal to $\frac{\alpha_n}{2}$ and C to have a time constant of the controller 10 times greater than the time constant of the uncontrolled system.

2.8 In steady state, determine the output current of the error amplifier and the voltages across R, C, and V_c. Deduce the duty cycle and compare it to the result of 1.3.

LT1959

4.5A, 500kHz Step-Down Switching Regulator

FEATURES

- **Operates with Input as Low as 4V**
- **Output Range Down to 1.21V**
- **Constant 500kHz Switching Frequency**
- **Uses All Surface Mount Components**
- **Inductor Size Reduced to 1.8µH**
- Saturating Switch Design: 0.07Ω
- Shutdown Current: 15µA
- Easily Synchronizable
- Cycle-by-Cycle Current Limiting
- 4.5A Switch
- Current Mode Control

APPLICATIONS

- Portable Computers
- Battery-Powered Systems
- Battery Chargers
- Distributed Power
- 5V to 3.3V Conversion
- 5V to 2.5V Conversion
- 5V to 1.8V Conversion

DESCRIPTION

The LT®1959 is a 500kHz monolithic buck mode switching regulator functionally identical to the LT1506 but optimized for lower output voltage applications. It will operate down to 1.21V output compared to 2.42V for the LT1506. A 4.5A switch is included on the die along with all the necessary oscillator, control and logic circuitry. High switching frequency allows a considerable reduction in the size of external components. The topology is current mode for fast transient response and good loop stability.

A special high speed bipolar process and new design techniques achieve high efficiency at high switching frequency. Efficiency is maintained over a wide output current range by keeping quiescent supply current to 3.8mA and by utilizing a supply boost capacitor to saturate the power switch.

The LT1959 fits into standard 7-pin DD and fused lead SO-8 packages. Full cycle-by-cycle short-circuit protection and thermal shutdown are provided. Standard surface mount external parts are used, including the inductor and capacitors. There is the optional function of shutdown or synchronization. A shutdown signal reduces supply current to 15µA. Synchronization allows an external logic level signal to increase the internal oscillator from 580kHz to 1MHz.

LT, LTC and LT are registered trademarks of Linear Technology Corporation.

TYPICAL APPLICATION

5V to 1.8V Down Converter

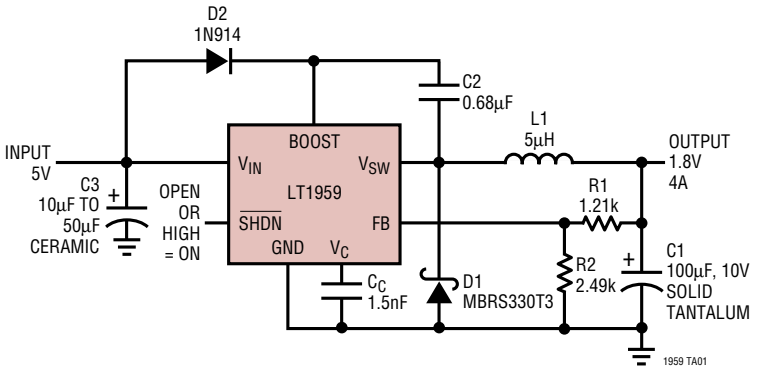

Efficiency vs Load Current

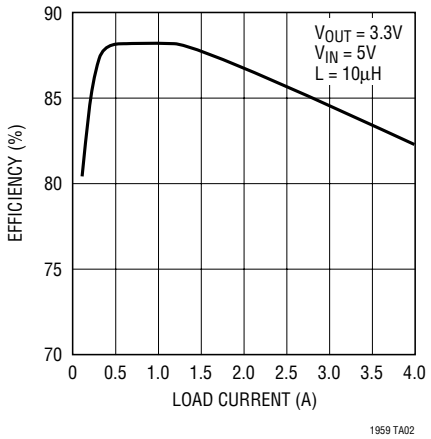

ABSOLUTE MAXIMUM RATINGS (Note 1)

Input Voltage 16V
BOOST Voltage 30V
BOOST Pin Above Input Voltage 15V
SHDN Pin Voltage 7V
FB Pin Voltage 3.5V
FB Pin Current 1mA
SYNC Pin Voltage 7V
Operating Junction Temperature Range
LT1959C ..... 0°C to 125°C
LT1959I ..... –40°C to 125°C
Storage Temperature Range ..... –65°C to 150°C
Lead Temperature (Soldering, 10 sec) ..... 300°C

PACKAGE/ORDER INFORMATION

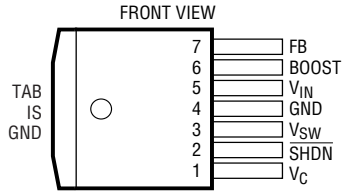

R PACKAGE
7-LEAD PLASTIC DD

T_{JMAX} = 150°C, θ_{JA} = 30°C/W
WITH PACKAGE SOLDERED TO 0.5 SQUARE INCH COPPER AREA OVER BACKSIDE GROUND PLANE OR INTERNAL POWER PLANE. θ_{JA} CAN VARY FROM 20°C/W TO >40°C/W DEPENDING ON MOUNTING TECHNIQUES

ORDER PART NUMBER

LT1959CR
LT1959IR

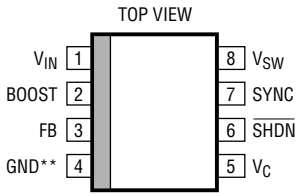

S8 PACKAGE
8-LEAD PLASTIC SO

T_{JMAX} = 150°C, θ_{JA} = 80°C/W
**WITH (FUSED GND) GROUND PIN CONNECTED TO GROUND PLANE OR LARGE LANDS

ORDER PART NUMBER

LT1959CS8
LT1959IS8

S8 PART MARKING

1959
1959I

ELECTRICAL CHARACTERISTICS

The ● denotes the specifications which apply over the full operating temperature range, otherwise specifications are at T_A = 25°C, T_J = 25°C, V_{IN} = 5V, V_C = 1.5V, Boost = V_{IN} + 5V, switch open, unless otherwise noted.

PARAMETER	CONDITIONS		MIN	TYP	MAX	UNITS
Feedback Voltage (Adjustable)	All Conditions	●	1.19	1.21	1.23	V
Reference Voltage Line Regulation	4.3V ≤ V_{IN} ≤ 15V			0.01	0.03	%/V
Feedback Input Bias Current		●	–0.5	0	0.5	µA
Error Amplifier Voltage Gain	(Note 2)		200	400		
Error Amplifier Transconductance	ΔI (V_C) = ±10µA		1500	2000	2700	µMho
		●	1000		3100	µMho
V_C Pin to Switch Current Transconductance				5.3		A/V
Error Amplifier Source Current	V_{FB} = 1.05V	●	140	225	320	µA
Error Amplifier Sink Current	V_{FB} = 1.35V	●	140	225	320	µA
V_C Pin Switching Threshold	Duty Cycle = 0			0.9		V
V_C Pin High Clamp				2.1		V
Switch Current Limit	V_C Open, V_{FB} = 1.05V, DC ≤ 50%	●	4.5	6	8.5	A
Slope Compensation	DC = 80%			0.8		A

ELECTRICAL CHARACTERISTICS

The ● denotes the specifications which apply over the full operating temperature range, otherwise specifications are at T_A = 25°C, T_J = 25°C, V_{IN} = 5V, V_C = 1.5V, Boost = V_{IN} + 5V, switch open, unless otherwise noted.

PARAMETER	CONDITIONS		MIN	TYP	MAX	UNITS
Switch On Resistance (Note 7)	I_{SW} = 4.5A			0.07	0.1	Ω
		●			0.13	Ω
Maximum Switch Duty Cycle	V_{FB} = 1.05V		90	93		%
		●	86	93		%
Switch Frequency	V_C Set to Give 50% Duty Cycle		460	500	540	kHz
		●	440		560	kHz
Switch Frequency Line Regulation	4.3V ≤ V_{IN} ≤ 15V	●		0	0.15	%/V
Frequency Shifting Threshold on FB Pin	Δf = 10kHz	●	0.5	0.7	1.0	V
Minimum Input Voltage (Note 3)		●		4.0	4.3	V
Minimum Boost Voltage (Note 4)	I_{SW} ≤ 4.5A	●		2.3	3.0	V
Boost Current (Note 5)	I_{SW} = 1A	●		20	35	mA
	I_{SW} = 4.5A	●		90	140	mA
Input Supply Current (Note 6)		●		3.8	5.4	mA
Shutdown Supply Current	$V_{\overline{SHDN}}$ = 0V, V_{SW} = 0V, V_C Open			15	50	µA
		●			75	µA
Lockout Threshold	V_C Open	●	2.3	2.38	2.46	V
Shutdown Thresholds	V_C Open Device Shutting Down	●	0.13	0.37	0.60	V
	Device Starting Up	●	0.25	0.45	0.7	V
Synchronization Threshold		●		1.5	2.2	V
Synchronizing Range			580		1000	kHz
SYNC Pin Input Resistance				40		kΩ

Note 1: Absolute Maximum Ratings are those values beyond which the life of a device may be impaired.

Note 2: Gain is measured with a V_C swing equal to 200mV above the switching threshold level to 200mV below the upper clamp level.

Note 3: Minimum input voltage is not measured directly, but is guaranteed by other tests. It is defined as the voltage where internal bias lines are still regulated so that the reference voltage and oscillator frequency remain constant. Actual minimum input voltage to maintain a regulated output will depend on output voltage and load current. See Applications Information.

Note 4: This is the minimum voltage across the boost capacitor needed to guarantee full saturation of the internal power switch.

Note 5: Boost current is the current flowing into the boost pin with the pin held 5V above input voltage. It flows only during switch on time.

Note 6: Input supply current is the bias current drawn by the input pin with switching disabled.

Note 7: Switch on resistance is calculated by dividing V_{IN} to V_{SW} voltage by the forced current (4.5A). See Typical Performance Characteristics for the graph of switch voltage at other currents.

TYPICAL PERFORMANCE CHARACTERISTICS

Minimum Input Voltage with 3.3V Output

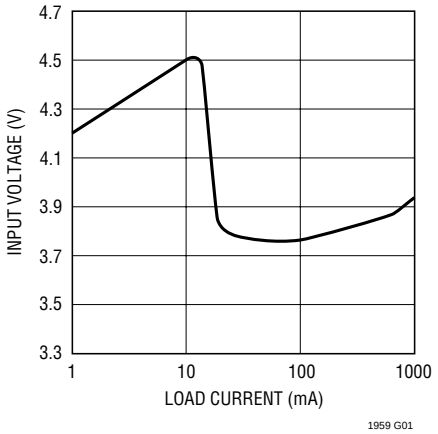

Switch Peak Current Limit

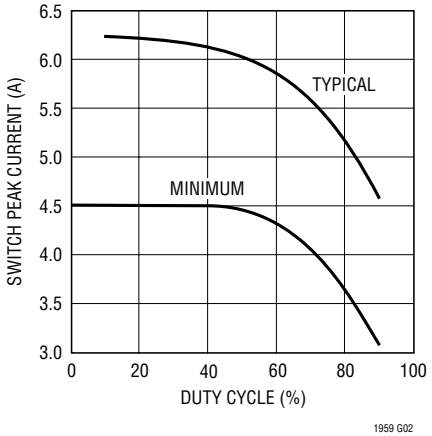

Feedback Pin Voltage

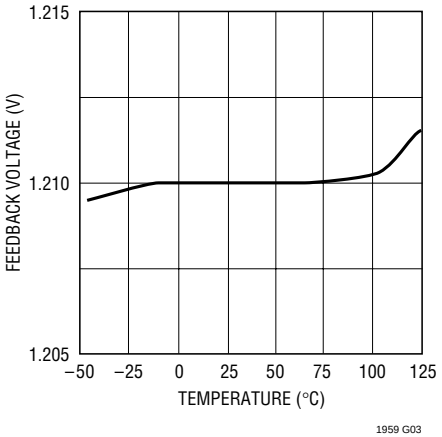

Shutdown Pin Bias Current

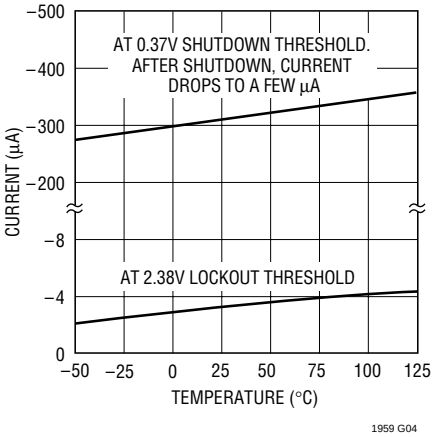

Lockout and Shutdown Thresholds

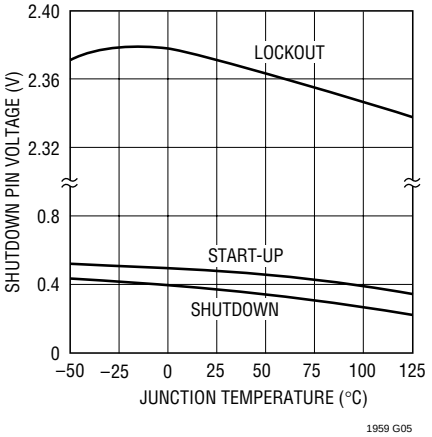

Shutdown Supply Current

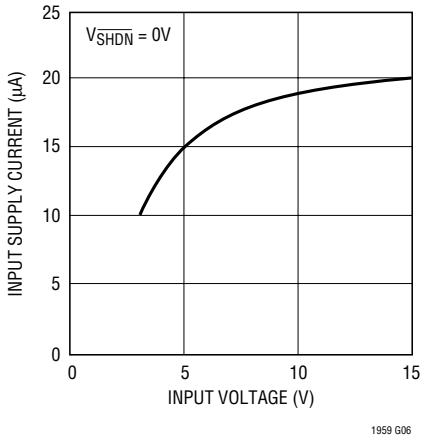

Shutdown Supply Current

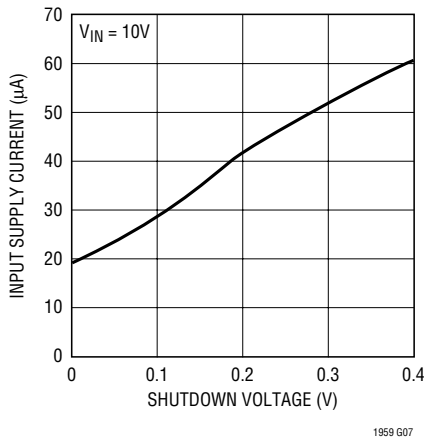

Error Amplifier Transconductance

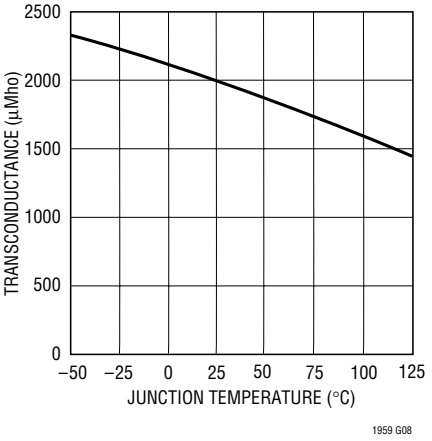

Error Amplifier Transconductance

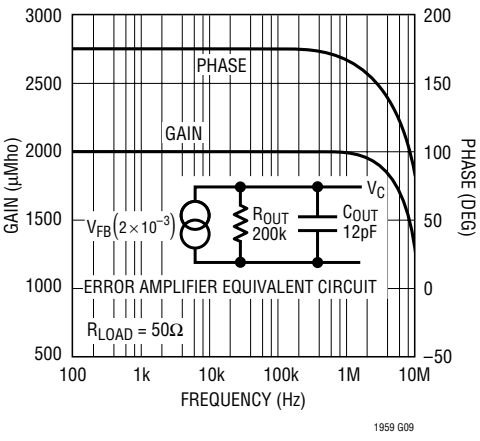

PIN FUNCTIONS

FB: The feedback pin is used to set output voltage using an external voltage divider that generates 1.21V at the pin with the desired output voltage. Three additional functions are performed by the FB pin. When the pin voltage drops below 0.8V, switch current limit is reduced. Below 0.7V the external sync function is disabled and switching frequency is reduced. See Feedback Pin Function section in Applications Information for details.

BOOST: The BOOST pin is used to provide a drive voltage, higher than the input voltage, to the internal bipolar NPN power switch. Without this added voltage, the typical switch voltage loss would be about 1.5V. The additional boost voltage allows the switch to saturate and voltage loss approximates that of a 0.07Ω FET structure, but with much smaller die area. Efficiency improves from 75% for conventional bipolar designs to > 89% for these new parts.

V_{IN}: This is the collector of the on-chip power NPN switch. This pin powers the internal circuitry and internal regulator. At NPN switch on and off, high dI/dt edges occur on this pin. Keep the external bypass and catch diode close to this pin. All trace inductance on this path will create a voltage spike at switch off, adding to the V_{CE} voltage across the internal NPN.

GND: The GND pin connection needs consideration for two reasons. First, it acts as the reference for the regulated output, so load regulation will suffer if the "ground" end of the load is not at the same voltage as the GND pin of the IC. This condition will occur when load current or other currents flow through metal paths between the GND pin and the load ground point. Keep the ground path short between the GND pin and the load and use a ground plane when possible. The second consideration is EMI caused by GND pin current spikes. Internal capacitance between the V_{SW} pin and the GND pin creates very narrow (<10ns) current spikes in the GND pin. If the GND pin is connected to system ground with a long metal trace, this trace may radiate excess EMI. Keep the path between the input bypass and the GND pin short. The GND pin of the SO-8 package is directly attached to the internal tab. This pin should be attached to a large copper area to improve thermal resistance.

V_{SW}: The switch pin is the emitter of the on-chip power NPN switch. This pin is driven up to the input pin voltage during switch on time. Inductor current drives the switch pin negative during switch off time. Negative voltage is clamped with the external catch diode. Maximum negative switch voltage allowed is –0.8V.

SYNC: (S08 Package Only) The sync pin is used to synchronize the internal oscillator to an external signal. It is directly logic compatible and can be driven with any signal between 10% and 90% duty cycle. The synchronizing range is equal to *initial* operating frequency, up to 1MHz. See Synchronizing section in Applications Information for details. When not in use, this pin should be grounded.

$\overline{SHDN}$: The shutdown pin is used to turn off the regulator and to reduce input drain current to a few microamperes. Actually, this pin has two separate thresholds, one at 2.38V to disable switching, and a second at 0.4V to force complete micropower shutdown. The 2.38V threshold functions as an accurate undervoltage lockout (UVLO). This is sometimes used to prevent the regulator from operating until the input votlage has reached a predetermined level.

V_C: The V_C pin is the output of the error amplifier and the input of the peak switch current comparator. It is normally used for frequency compensation, but can do double duty as a current clamp or control loop override. This pin sits at about 1V for very light loads and 2V at maximum load. It can be driven to ground to shut off the regulator, but if driven high, current must be limited to 4mA.

BLOCK DIAGRAM

The LT1959 is a constant frequency, current mode buck converter. This means that there is an internal clock and two feedback loops that control the duty cycle of the power switch. In addition to the normal error amplifier, there is a current sense amplifier that monitors switch current on a cycle-by-cycle basis. A switch cycle starts with an oscillator pulse which sets the R_S flip-flop to turn the switch on. When switch current reaches a level set by the inverting input of the comparator, the flip-flop is reset and the switch turns off. Output voltage control is obtained by using the output of the error amplifier to set the switch current trip point. This technique means that the error amplifier commands current to be delivered to the output rather than voltage. A voltage fed system will have low phase shift up to the resonant frequency of the inductor and output capacitor, then an abrupt 180° shift will occur. The current fed system will have 90° phase shift at a much lower frequency, but will not have the additional 90° shift until well beyond the LC resonant frequency. This makes it much easier to frequency compensate the feedback loop and also gives much quicker transient response.

High switch efficiency is attained by using the BOOST pin to provide a voltage to the switch driver which is higher than the input voltage, allowing switch to be saturated. This boosted voltage is generated with an external capacitor and diode. Two comparators are connected to the shutdown pin. One has a 2.38V threshold for undervoltage lockout and the second has a 0.4V threshold for complete shutdown.

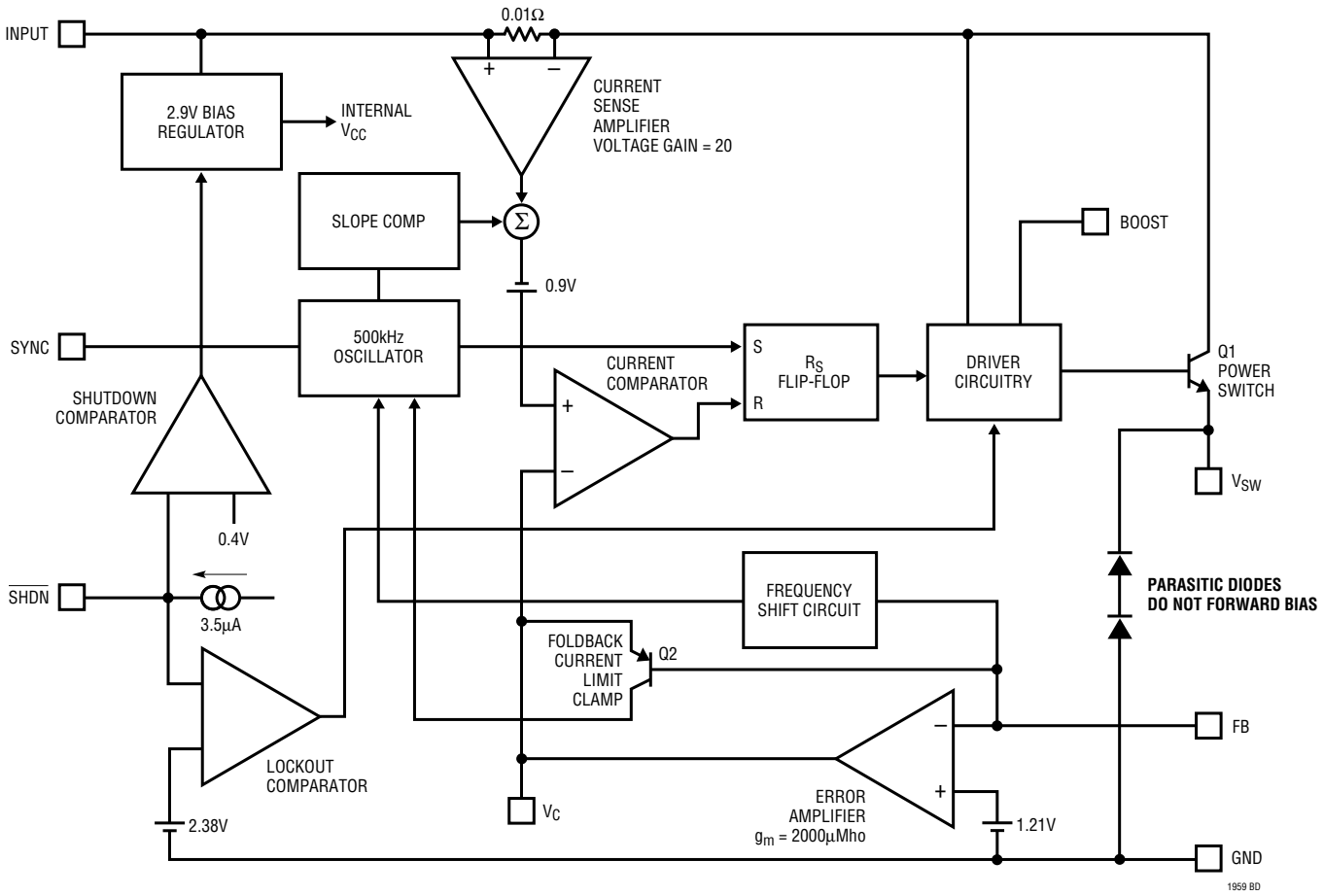

Figure 1. Block Diagram

2 4-quadrant chopper used in railway traction

The reversible structure of this type of chopper allows for its use in controlling direct current machines in traction, where reversibility is most interesting to exploit. It is used for all power ranges, with the example given here being that of a tramway.

The tramway is modeled by a "car" powered by a DC machine, itself controlled by a reversible chopper powered by a perfect reversible DC source (catenary type). The simplified diagram of the device is shown in the following figure and corresponds to the described quantities.

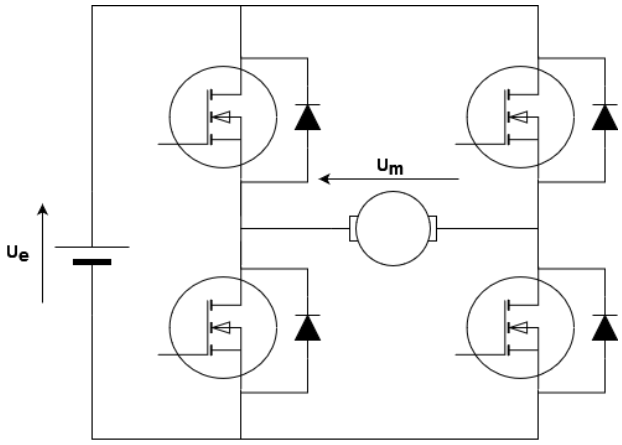

Figure 2.1: 4 Quadrant chopper

The chopper is powered by a constant voltage source with a value of $U_E = 1500V$. It consists of two independent bridge arms controlled at a fixed frequency of $F_d = 2kHz$. The duty cycles are denoted as follows: α_1 for T_{11} and α_2 for T_{21}, with the control of each arm being complementary. We assume perfect components, diodes, and transistors. Between the two bridge arms, the following control relationship is maintained: $\alpha_1 + \alpha_2 = 1$.

The direct current motor is conventionally modeled by its electromotive force (EMF) E, its armature resistance R, and its armature inductance L; its excitation is kept constant by another device not studied here. The torque constant (equal to the EMF constant) is denoted as k_φ, and the numerical values are as follows:

$R = 0.2\Omega$; $L = 25mH$; $k_\varphi = 7.64Nm/A$; nominal speed $N_n = 1500rpm$.

The tramway car constitutes the mechanical load and presents, with respect to the motor shaft, a moment of inertia $J = 200kg.m^2$. Depending on the trajectory, it also "returns" to this motor shaft a resisting torque denoted as C_v.

1. **Total complementary control**

   1.1 Quickly represent the shape of the motor voltage $u_m(t)$ for any duty cycle α_1, first less than 0.5 and then greater than 0.5.

   1.2 Calculate the average value of this voltage, denoted as U_m, as a function of α_1.

2. **Functional description**

   In this part, we neglect the current ripple in the motor. In addition, a very fast current control compared to the mechanical time constants allows us to impose the desired value on the motor armature current, denoted as I_M, which is constant.

   2.1 Express the average values (at the switching frequency F_d) of the voltage across the motor armature, denoted as U_M, and the current drawn by the chopper from the source, denoted as I_E, as functions of α_1, U_E, and I_M.

   2.2 The tramway stops on an **uphill** slope. The weight of the car then exerts a torque on the motor shaft with a value of $C_v = 382Nm$. What is the duty cycle α_{10} required to keep the tramway at a standstill? What is the current I_{E0} drawn from the power supply (still in average value)?

   2.3 The tramway starts on a level track (neglecting the resisting torque) with a constant acceleration of $5rad/s^2$ until it reaches the nominal motor speed.

      i. What is the current I_m in the motor?

      ii. Plot the variation of the duty cycle α_1 during this acceleration phase.

      iii. Plot the variation of the current I_E drawn from the power supply during this acceleration phase.

      iv. Calculate the acceleration time Δt_a.

   2.4 The tramway travels on a **downhill** trajectory at a constant speed, with the motor running at its nominal speed. The weight exerts a torque $C_v = 382Nm$. What is the current I_{Ed} drawn from the power supply? What is the value of the duty cycle α_{1d} that allows for this constant speed operation?

   2.5 Emergency braking downhill: during the previous operation (1.3), the driver requests emergency braking characterized by controlling the armature current to the maximum value tolerable by the chopper and the machine, $I_{max} = 250A$. We assume that this current is imposed quasi-instantaneously and remains present during the deceleration phase, with the torque related to the weight of the car remaining unchanged at $382Nm$.

      i. Calculate and represent the time evolution of the motor speed $\Omega(t)$, which represents the tramway speed.

      ii. Calculate the deceleration time until stop, denoted as Δt_a.

      iii. Determine the evolution of the duty cycle $\alpha_1(t)$ during this phase, specifying its value at the beginning of braking and just before the vehicle comes to a stop.

iv. Calculate the total energy E_C returned to the source during this braking operation.

2.6 Represent the operating quadrants of the chopper used during the different phases of the tramway operation.

3 Autonomous Energy Production for Isolated Site

Note: The devices and sizing presented below are a simplified approach to the problem.

The context is that of an isolated site that we want to power using photovoltaic (PV) panels and storage batteries.

The site consumes energy continuously with a "base" power and consumption peaks throughout the day.

To maintain operation during the night, energy storage by batteries is associated with the PV panels.

The energy supply is provided in alternating current, with a service voltage of 230 VAC - 50 Hz generated by a single-phase inverter.

The general architecture of the system is as follows:

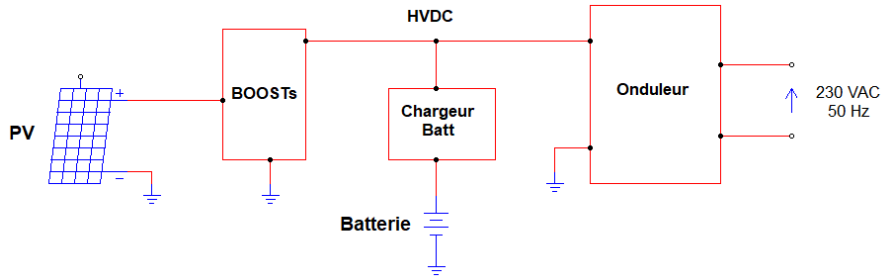

Figure 3.1: Overall architecture

Main data

Installation:

- Base power of the installation: 300 W
- Peak power consumption: 1500 W
- Duration of power peaks: 3x30 min between 11:00 and 15:00.

PV panels:

- The PV panels are oriented to the south, with an inclination of $35°$. The installation is located in the Alps, south of Briançon, in a geographical area where the average annual irradiation is $1500\ kWh/m^2$ (taking into account shading).
- The datasheet of a PV panel provides the following information:

ELECTRICAL CHARACTERISTICS

PERFORMANCE AT STANDARD TEST CONDITION (STC: 1000W/m², 25°C, AM1.5)

Module Series	TPS105S-250W
Maximum Power at STC (Pmax)	250W (+3%)
Short Circuit Current (Isc)	6.80A
Open Circuit Voltage (Voc)	45.67V
Maximum Power Current (Imp)	6.42A
Maximum Power Voltage (Vmp)	39.01V

MECHANICAL SPECIFICATION

Cell Type	MONO crystalline 182×91mm
Number of Cells	66pcs
Dimensions	1133×1060×30mm
Front Glass	3.2mm Low iron tempered glass
Frame	Anodized aluminum alloy
Connector	MC4 PLUG
Output Cables	Length 0.9m

- The overall efficiency of the PV panels is 20% (taking into account the ratio [cell area / total area]) and it is considered that the overall efficiency of the energy conversion chain is 90% (including converters, line losses, etc.).

Preliminaries

Determine:

1. The energy consumed by the installation per day and per year.
2. The required PV panel area to supply the system, taking into account the efficiencies.
3. The minimum number of PV panels required.

3.1 BOOST Converters

It is decided to implement **12 PV panels**, grouped in two series-connected PV panel groups. Each PV panel group is connected to an input of a BOOST DC-DC converter. Thus, the developed structure of the "BOOST" in Figure 1 is as follows:

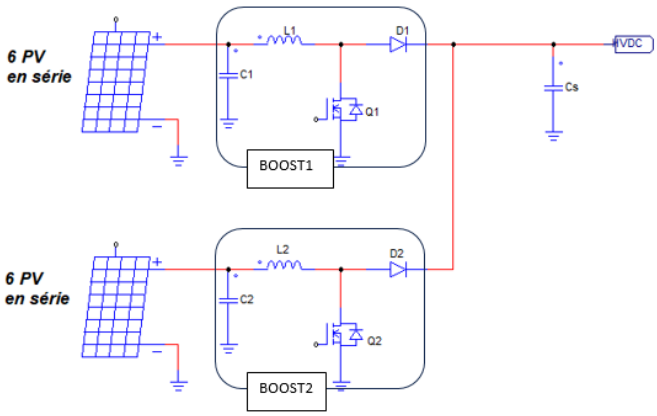

Figure 3.2: Boost architecture

It is assumed that all PV panels are uniformly illuminated so that each PV panel group provides half of the instantaneous power consumed.

The HVDC output voltage is regulated at **500 V** by control loops acting on the duty cycles of transistors Q1 and Q2.

The switching frequency of Q1 and Q2 is fixed and equal to **Fd = 50 kHz**.

For now, we are only interested in BOOST 1 and we assume that all components are ideal.

Considering that:

- The BOOST input voltage (on C1) and HVDC are rigorously constant over one switching period.
- The ripple current ΔI in L1 represents 20% of the average input current.
- We are in continuous conduction mode.

1. Represent the currents in L1, Q1, and D1, as well as the voltages across them, over two switching periods and for a duty cycle of 50%.
2. Determine the expression of HVDC as a function of the input voltage, denoted Vpv, and the duty cycle α. Similarly, express the relationship between the input current Ipv (average current in L1) and the output current I_{HVDC}.
3. Determine literally:
   3.1 The maximum voltage applied to the terminals of Q1 and D1.
   3.2 The average and maximum values of the currents in L1, Q1, and D1 as a function of Ipv, ΔI, and the duty cycle.
   3.3 Summarize these results in a constraints table (useful for component selection).

   Now, consider both BOOST converters operating and sharing the power equally. The environmental conditions are STC conditions ($1000W/m^2$ - $25°C$).

   We also consider an operating sequence in which (first extreme case):
   - The power consumed by the load is maximum.
   - The battery is not fully charged and consumes the power difference between the power consumed by the load and the power supplied by the PV panels, which corresponds to the total "peak" power.
4. Determine:
   4.1 The total power P_{cT} that the PV panels can provide considering the irradiation.
   4.2 The power flowing through each BOOST converter.
   4.3 The power consumed by the battery.
5. Under these operating conditions, for each of the two BOOST converters, determine:
   5.1 The input voltage Vpv.
   5.2 The input current Ipv.

5.3 The control duty cycle of the transistors.

5.4 The value of L for which ΔI represents 20% of Ipv.

5.5 The constraints applied to the power components Q and D (maximum voltage, average and maximum current).

Now, assume that the power consumed by the load is the minimum power and the battery is fully charged (second extreme case).

6. Suppose that the conditions are still STC conditions and that the output voltage of a PV panel is 44 V.

   6.1 Determine the power supplied by each group of PV panels and the input current of each BOOST converter.

   6.2 Are the BOOST converters still operating in continuous conduction mode?

   6.3 Represent the input current in L and the voltage across it.

   6.4 Express the input current Ipv as a function of Vpv, HVDC, L, Fd, and the transistor conduction time t_{on}.

   6.5 Determine the new value of the duty cycle to maintain HVDC at 500 V.

3.2 Battery Charger (Half-Bridge)

To provide electricity supply during the night, a battery pack is installed.

The power structure associated with the batteries is that of a reversible converter of the "Half Bridge" type (2-quadrant chopper). This converter allows powering the installation from the pack during the night and recharging the pack from the PV panels during the day.

The following diagram shows this structure:

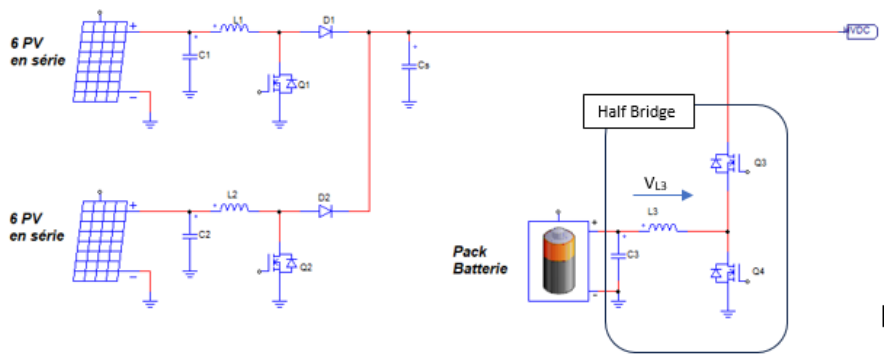

Figure 3.3: 2-quadrant chopper architecture

In all cases, the control loops of the BOOST and Half-Bridge converters maintain **HVDC = 500 V.**

The battery pack voltage is assumed to be constant and equal to **Ubatt = 120 V** (38 elements of 3.2 V / LiFePo4 technology).

A battery current limiting loop included in the BMS (Battery Management System) limits it to $I_{batt_max} = 10\ A$.

Transistors Q3 and Q4 are driven in complementary control at a fixed frequency of 50 kHz. Dead times are neglected.

Hereafter, the duty cycle refers to the ratio of the conduction time of Q3 to the switching period.

1. For a given duty cycle (0.3 for example) and in continuous conduction mode, represent, for charge currents ($I_{L3} > 0$) and battery discharge currents of the same absolute values:
   - 1.1 The currents in L3, Q3, and Q4.
   - 1.2 The voltage across L3.
   - 1.3 Indicate the directions of current flow in L3.
2. Express the relationship between the battery voltage and HVDC as a function of the control duty cycle of Q3 denoted α_{HB} (in continuous conduction mode).

Initially, we are in the daytime while the pack is being charged in a configuration corresponding to question 4 of TD 3.1. In this configuration, the battery charging current is I_{batt_max}.

3. Is the Half-Bridge converter operating in "Buck" or "Boost" mode? What is the purpose of C3?

4. We want the ripple current in L3 to represent 30% of its average current (i.e., 3 A). Determine:

   4.1 The control duty cycle of Q3.

   4.2 The value to be given to L3.

5. For this operating point, determine the voltage, maximum current, and average current constraints on Q3 and Q4.

   We are still in the daytime, but now in a configuration where the installation calls for its maximum power (1800 W). The weather conditions are such that the PV panels can only provide 1000 W (including Boost efficiencies).

6. What is the power supplied by the battery and what is its current?

7. Is the Half-Bridge operation "Buck" or "Boost"?

8. What is the control duty cycle of Q3? Is the HB converter still operating in continuous conduction mode? Represent the currents in L3, Q3, and Q4 and the voltage V_{L3} indicating the remarkable numerical values. Provide the equivalent diagrams for the two operating phases indicating the directions of current flow.

9. During the night, the battery alone supplies power to the installation and the power consumed is 300 W. We assume that the HB efficiency is unity.

   9.1 Determine the value of the control duty cycle of Q3 to maintain HVDC at 500 V.

   9.2 Represent the current in L3 indicating its average value.

10. Taking into account a global efficiency of [HB + Inverter] of 90%, what should be the minimum capacity (in Ah) of the pack to maintain autonomy for 16 consecutive hours with a maximum discharge rate of 90% (during this period, the phases at maximum power do not occur).

3.3 Single-Phase PWM Inverter on RL Load

We now turn our attention to the single-phase inverter. The grid is modeled by an R-L load in series. The block diagram is as follows:

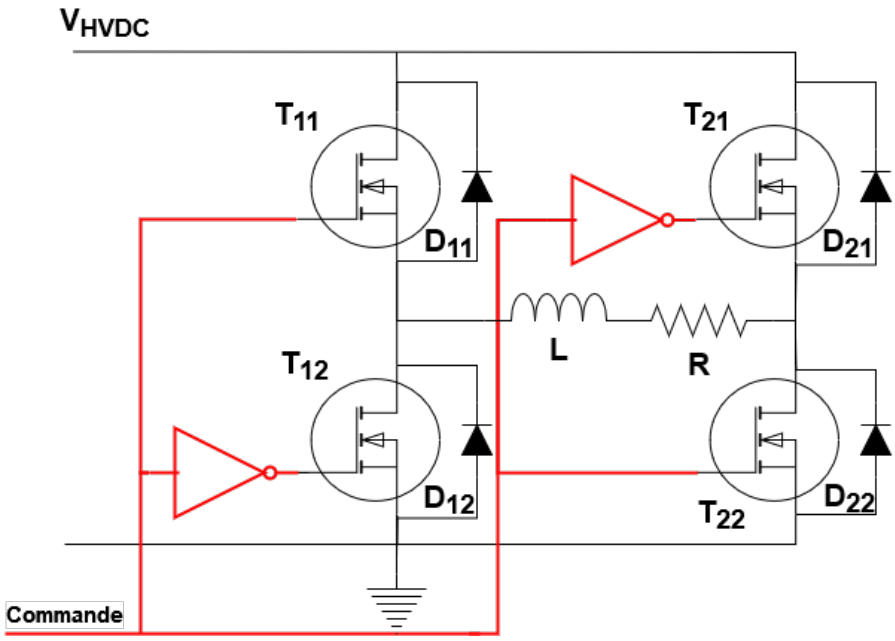

- The transistors operate in PWM at a switching frequency F_d much higher than the frequency of the output voltage to be reconstructed.
- The duty cycle varies over time and will be denoted as $\alpha(t) = 0.5 + \delta_\alpha \sin(\omega t)$.

Hereafter, we refer to:

- V_0: the voltage across the $L - R$ combination (inverter output voltage).
- I_R: the current in the R-L load.

The main characteristics of the load are:

- Equivalent circuit: series $R - L$, with $L = 30mH$
- Rated power: 1500 W
- Rated voltage across R: $U_{Rn} = 230V$ (rms value)

1. Output voltage V_0

   1.1 Represent the shape of the output voltage for a duty cycle $\alpha > 0.5$ over one switching period.

   1.2 Express the average value of V_o over one switching period as a function of the duty cycle α and V_{DC}.

1.3 Express the time-varying average value (over one switching period) of the output voltage $< V_0 > (t)$ as a function of V_{DC} and δ_α.

1.4 Determine the rms value of $< V_0 > (t)$ (denoted $V_{0\ eff}$) as a function of V_{HVDC} and δ_α.

1.5 Neglecting the current component due to switching, give the expression of the current in R ($I_R(t)$) taking $< V_0 > (t)$ as the reference phase.

1.6 Express the rms value of the current in R as a function of $V_{0\ eff}$, R, L, and ω.

1.7 Express the phase shift φ between $I_R(t)$ and $< V_0 > (t)$ as a function of R, L, and ω.

1.8 Express the power factor of the RL load as a function of R, L, and ω.

1.9 Express the power in R as a function of δ_α, V_{HVDC}, R, and φ.

2. Operation at rated power (1500W).

   As a reminder, the supply voltage V_{HVDC} is the DC bus voltage, $V_{HVDC} = 500V$. The frequency of the reconstructed voltage ($< V_0 > (t)$) is **50 Hz**.

   2.1 Determine the value of R for this operating point.

   2.2 Determine the power factor value.

   2.3 Establish the Fresnel diagram relating V_0, I_R, and U_R.

   2.4 Determine the value of the voltage across L.

   2.5 Determine the value to be given to $V_{0\ eff}$.

   2.6 Determine the value to be given to δ_α to achieve this operating point.

3. Determine the maximum voltage in the blocked state and the maximum current for each inverter switch (the current component at the switching frequency is always neglected).

4 Flyback Switching Power Supply for Battery Charger

The goal is to use the circuit shown in the following figure to create a 24V battery charger.

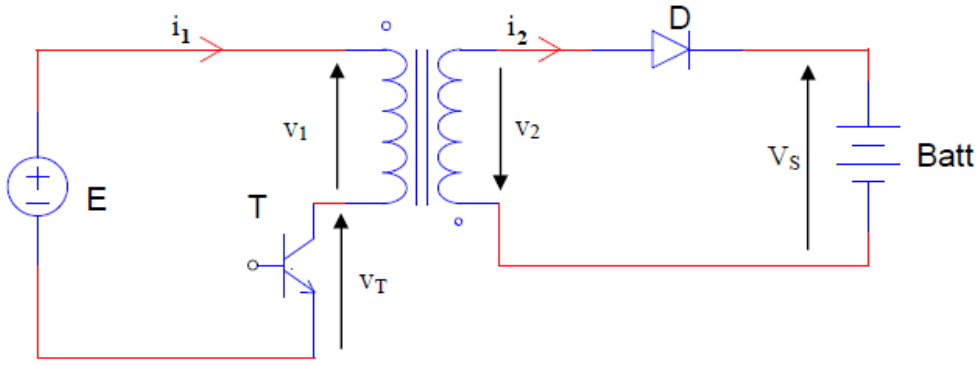

Let n_1 and n_2 be the respective numbers of turns in the primary and secondary windings, with the transformation ratio denoted as m. The primary magnetizing inductance is denoted as L_1, the switching frequency as f, and the duty cycle as α.

The initially discharged battery has a voltage of $V_{S0} = 20V$ across its terminals. The charging process will be stopped when the voltage across the terminals reaches $V_{S1} = 26V$. However, throughout the analysis, this battery voltage, denoted as V_S, will be assumed to be constant on the timescale of the switching.

At the beginning of the battery charging process, it is assumed that the power supply operates in critical mode with a duty cycle of α_0, and the average current in the battery is I_{S0}.

Numerical values: $E = 300V$; $f = 20kHz$; $\alpha_0 = 0.5$; $I_{S0} = 10A$.

1. **Start of charging**

   1.1 Provide the expression of Hopkinson's theorem relating n_1, i_1, n_2, i_2, and R (reluctance of the ferrite core, inverse of the specific inductance A_L), and φ (elementary flux in the core).

   1.2 Plot the waveforms of i_1, i_2, φ, v_T, and v_1 over one switching period.

   1.3 Deduce the expression of the output voltage V_S in terms of E, m, and α_0. Calculate the numerical value of m.

   1.4 Determine the expression of the average output current I_{S0} in terms of L_1, α_0, m, E, and f. Calculate the numerical value of L_1.

1.5 Calculate the energy W_D delivered to the battery per switching cycle using two different methods.

1.6 Calculate the numerical value of this energy W_D and determine the charging time at constant current for a battery with a "capacity" of 25 Ah.

2. **End of charging**

During the charging process, the output voltage slowly increases from V_{S0} to V_{S1} while maintaining the duty cycle at α_0.

2.1 How has the conduction mode of the power supply been modified?

2.2 Plot the waveforms of i_1, i_2, v_T, and v_1 over one switching period.

2.3 What is the conduction time of the diode D?

2.4 What is the energy transferred per cycle now? Determine the average current I_S supplied to the battery.

2.5 What value α_1 should be given to the duty cycle to subsequently provide an average charging current of $I_{S1} = I_{S0}/10$?

3. **Saturation limit**

We are in the critical mode (start of charging).

3.1 Determine the expression of the maximum magnetic induction in the ferrite core in terms of E, α, T, n_1, and A_e (effective area of the core).

3.2 Deduce the expression of the minimum value $A_{e\ min}$ of the core area to prevent any saturation of the material. For this purpose, let B_{sat} be the induction value near saturation.

4. **Winding window area**

We are still in the critical mode (start of charging).

4.1 Using the results from the first part, determine the effective value $I_{1\ eff}$ of the current in the transistor in terms of the output current I_s, m, and α.

4.2 Similarly, express the effective value $I_{2\ eff}$ of the secondary current in terms of I_s and α.

4.3 The chosen current density for both windings made of copper wire is δ. Determine the expression of the total copper area, denoted as $S_{T\ Cu}$, in terms of I_s, δ, n_2, and α. Compare the primary and secondary copper areas.

4.4 Deduce the minimum winding window area, denoted as S_B, if a winding coefficient k_B is chosen ($S_{T\ Cu} = k_B.S_B$).

5. **Choice of magnetic core**

5.1 Based on the results from the previous questions, determine the inequality that the product $A_e.S_B$ of this power supply must satisfy in terms of B_{sat}, P_s, T, k_B, δ, and α.

5.2 Calculate the minimum value of this product in mm^4 for the following numerical values:

$$P_s = 200W;\ \alpha = 0.5;\ k_B = 0.5;\ B_{sat} = 0.4T;\ \delta = 5A.mm^{-2};\ f = 20kHz.$$

5.3 Choose a core from the following list, for which the manufacturer provides the values of A_e, S_B, and A_L (specific inductance) without air gap, as well as A_L with a 0.5 mm air gap. Note that all these cores are made of the same material, N41.

Core	A_e (mm^2)	S_B (mm^2)	A_L without air gap (nH)	A_L with 0.5 mm air gap (nH)
RM6	31	32	3100	- - -
RM8	55	57	4100	160
RM10	90	93	5500	250
RM12	125	128	6000	300
RM14	170	176	6800	400

5.4 For this choice of core, determine the minimum numbers of turns n_1 and n_2 to limit the maximum induction in the ferrite core to B_{sat}. For these calculations, choose the values of the numbers of turns that are "optimal" for the given numerical values.

5.5 Will an air gap be necessary to achieve the desired inductance L_1?

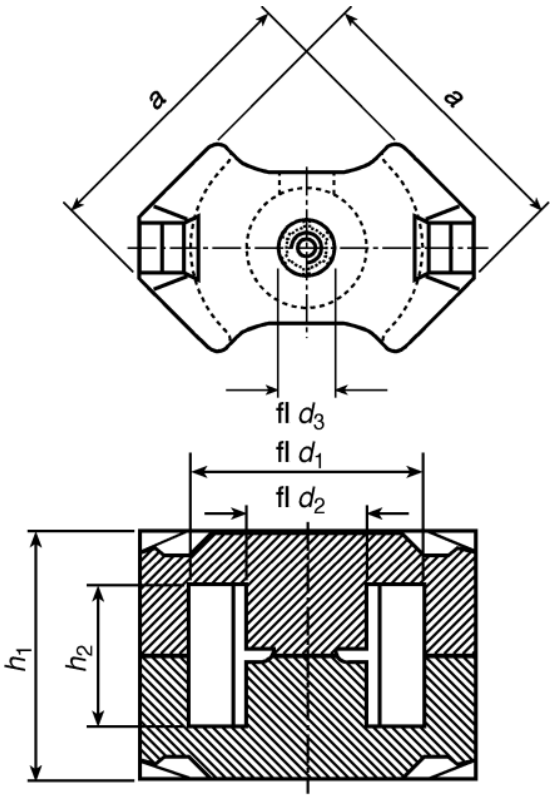

RM- 8- bis RM-14-Kernstze
fr nichtlineare Drosselspulen

5 Direct Switching Power Supply (Asymmetric FORWARD)

The purpose of this problem is the simplified study of the switching converter represented in the following figure:

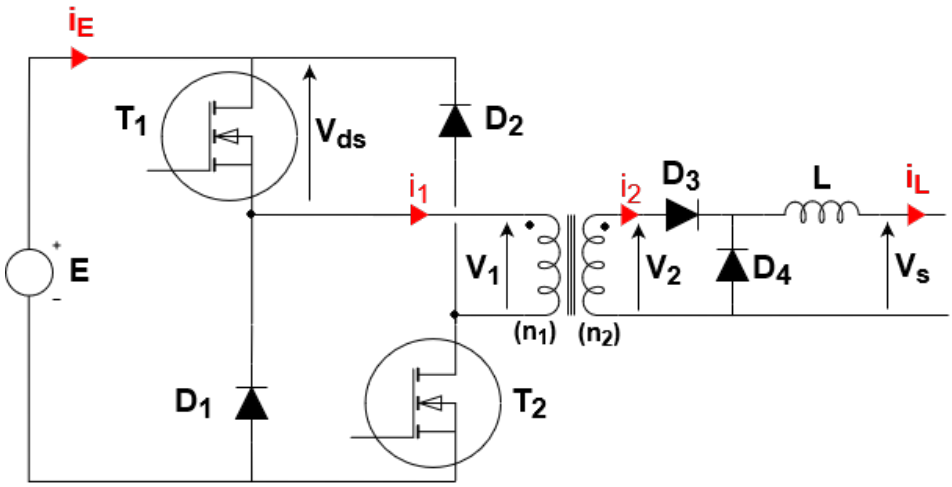

All the semiconductors are assumed to be perfect. The two windings of the transformer are made on the same ferromagnetic core without leakage: all the turns "enclose" the same elementary flux φ, and the reluctance of this magnetic circuit is denoted by R. The output inductance coil L is independent of this transformer. All resistances are neglected.

The control of the transistors is identical, performed at the period T, with a duty cycle denoted by α: they are therefore conductive during the interval $[0,\ \alpha.T]$, and blocked during the interval $[\alpha.T,\ T]$.

The output voltage V_s is assumed to be constant throughout the study, and the device will be kept in total demagnetization at each operating cycle. We are only interested in the continuous conduction mode in the output inductance L, so its current never becomes zero: $i_L > 0$.

1. **General operation of the power supply**

   In this part, we will study the operation of the power supply. We will assume that it operates in **total demagnetization**, meaning that at the end of a period, the magnetic flux in the transformer is zero. We will plot the time curves of φ (magnetic flux in the transformer), v_1, v_2, v_{DS} (drain-source voltage of transistor T_1), v_L, i_1, i_2, i_L, and i_E.

1.1 Considering the directions of the windings shown in the diagram and the directions of measurement of the different currents and voltages:

i. Give the expression of the voltages v_1 and v_2 as a function of the flux φ

ii. Express the Hopkinson's law relating the currents i_1 and i_2 to the same flux φ using the number of turns and the reluctance R.

1.2 We consider the interval $[0,\ \alpha T]$: we assume that the initial flux at $t = 0$ is zero (total demagnetization)

i. Determine the voltage v_1 applied to the primary winding

ii. Deduce the voltage v_2 as well as the state of diodes $D3$ and $D4$

iii. Give the expression of the voltage v_L across the output inductance in terms of the number of turns, E, and V_S

iv. Express the evolution of the flux $\varphi(t)$ during this time interval

v. Express the current i_2 in terms of i_L

vi. Using the Hopkinson's law and the previous results, determine the expression of the primary current i_1 in terms of i_L and the flux φ using the number of turns and the reluctance R

vii. At the instant αT, the end of this first time interval, we assume that the flux has become equal to φ_0. Deduce the expression of this value of φ_0 in terms of E, n_1, and αT

1.3 We consider the interval $[\alpha T,\ T]$: all transistors are blocked.

i. At $t = \alpha T$, determine the state of diodes $D1$ and $D2$. What are the values of voltages v_1 and v_2? Deduce the state of diodes $D3$ and $D4$

ii. Deduce the expression of v_L in terms of V_S

iii. Express the evolution of the flux $\varphi(t)$ during this time interval

iv. At what instant t_0 does the flux become zero? Give a condition on α for the system to operate in total demagnetization

v. What happens next until the end of the period T?

1.4 The power supply is intended to produce a constant voltage of 24 V from the perfectly filtered single-phase rectified network, $E = 300V$. The transmitted power is $P_n = 600W$, and the switching frequency is $f = 50kHz$. We choose to operate the power supply around the nominal duty cycle $\alpha = 0.4$.

i. Calculate the turns ratio n_2/n_1

ii. Calculate the average value I_s of the current i_L

iii. Calculate the minimum value to be given to the inductance L to limit the peak-to-peak ripple of the current i_L to 5% of its average value I_s. Keep this value of L for the following calculations

iv. Deduce the maximum value $I_{1\ max}$ of the current in the transistor when neglecting the magnetizing current

2. **Transformer dimensioning**

2.1 To justify the previous assumption, determine the minimum value of the magnetizing inductance L_1 (seen from the primary winding) that makes the maximum no-load current less than $I_{1\ max}/20$

2.2 Neglecting the ripple of the current i_L and the magnetizing current, determine the rms values $I_{1\ eff}$ and $I_{2\ eff}$ of the currents i_1 and i_2 in terms of I_s, n_1, n_2, and α

2.3 Determine, with these same assumptions, the minimum winding area S_B required in terms of current density δ, winding coefficient k_B, I_s, n_2, and α

2.4 Also give the expression of the minimum cross-sectional area A_e of the core that avoids core saturation by maintaining a maximum induction below B_{max}

2.5 Deduce the minimal sizing product $A_e.S_B$ of this transformer in terms of the duty cycle, the different characteristic parameters of this power supply, including its output power P_S, and its switching frequency f

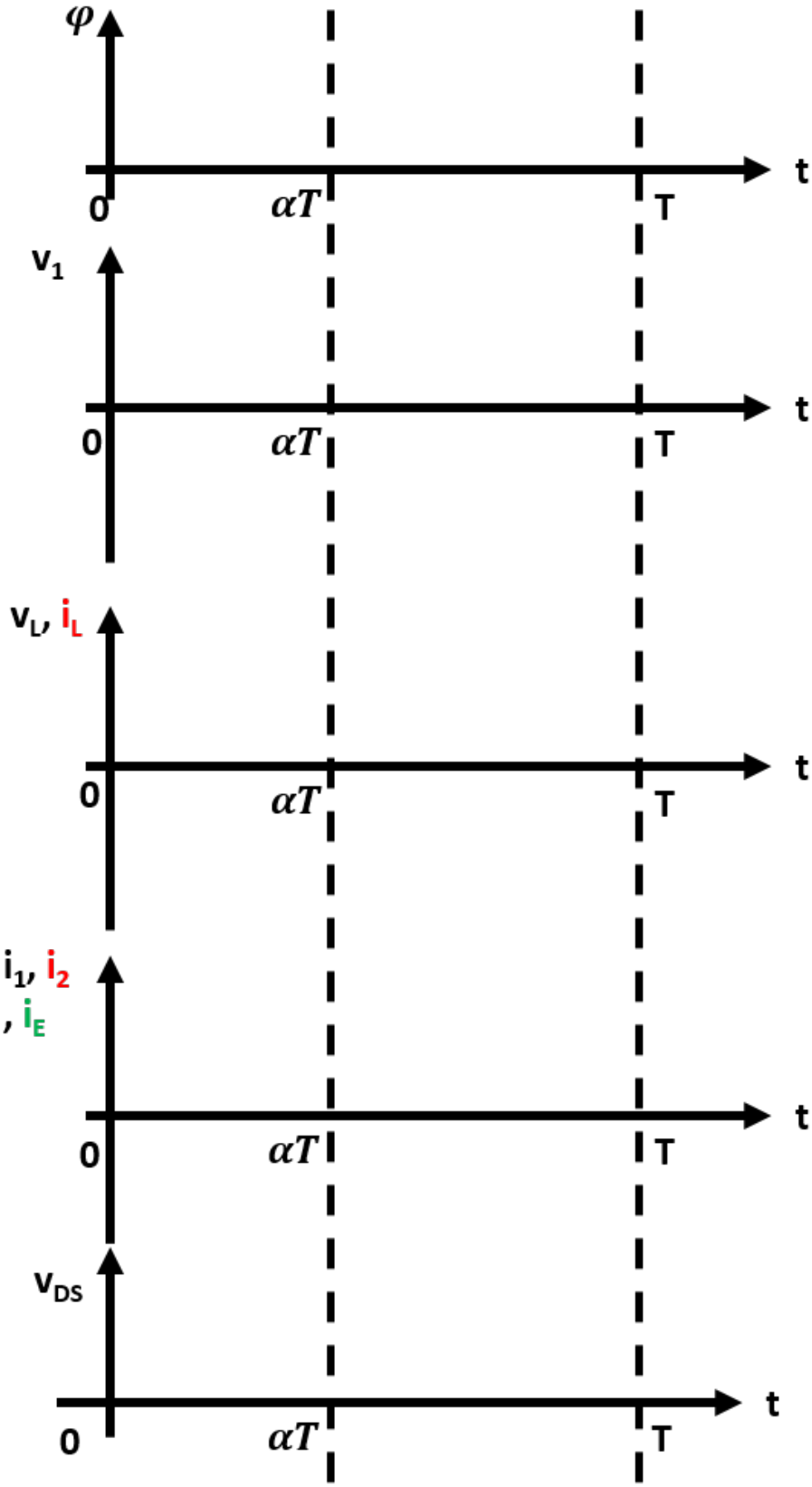
φ
t
0
αT
T
v1
t
0
αT
T
vL, iL
t
0
αT
T
i1, i2
, iE
t
0
αT
T
vDS
t
0
αT
T