ENSEA

Beyond Engineering

POWER ELECTRONICS

DEE_2401

Labs

Semester 7

Alexis MARTIN

2025

1 Labs recommendations

The purpose of these practical sessions is to illustrate the second-year energy conversion course through the study of four experiments:

- Buck Converter (simulations with LTSpice)
- Four-Quadrant Chopper
- Flyback Switching Power Supply
- Forward Switching Power Supply

To prepare for these sessions, it is necessary to know the corresponding course and to have read the complete text of the practical work in order to plan the different stages of the study. In particular, when a comparison with theoretical curves is requested, it is necessary to bring them to the session and to know how to adapt them to the practical work.

The practical work themes are carried out in rotation: it is therefore imperative to know your pair number before coming to the practical work session.

	Pair 1	**Pair 2**	**Pair 3**	**Pair 4**	**Pair 5**	**Pair 6**	**Pair 7**
Session 1	4Q Chop.	4Q Chop.	4Q Chop.	LTSpice	LTSpice	LTSpice	LTSpice
Session 2	LTSpice	LTSpice	LTSpice	4Q Chop.	4Q Chop.	4Q Chop.	4Q Chop.
Session 3	Forward	Forward	Forward	Flyback	Flyback	Flyback	Flyback
Session 4	Flyback	Flyback	Flyback	Forward	Forward	Forward	Forward

Depending on the laboratory where the practical sessions take place, some differences may appear in the wiring of the machines during the four-quadrant chopper practical work as well as in the nominal values of these machines which are indicated on their nameplate and must therefore be carefully noted.

At the end of each session, a report must be submitted to the professor. The evaluation will take into account both the quality of the report and the behavior during the session itself.

2 Buck converter

This lab follows the tutorial on the Buck converter, the statement of which is recalled below. The objective is to use the LTSpice software to simulate the circuit and understand its operation. LTSpice is software provided by Analog Device, based on Spice simulation. The software documentation is available on the Analog Device website: Analog Device Website

We want to power an STM32H4 microprocessor using a battery. The specifications are as follows:

- LiPo 2S battery $V_{in} = 7.4\ V$
- Microprocessor supply voltage: $V_{out} = 3.3\ V$
- Maximum input voltage ripple for the microprocessor: $\Delta V_S = 50\ mV$
- Nominal output current: $I_S = 200\ mA$
- Current ripple: 30%

For this, we want to use the following component: **LT1959**, an excerpt from the documentation is in the appendix. In this exercise, we will assume that the **components are perfect**, and that the Buck operates in **continuous conduction mode**.

2.1 Preparation

1. Draw the circuit to use this component in Buck operation
2. Recall the values of (no calculation is required):
   - the switching frequency of the converter
   - the values of L_1, C_1 for the output filter of the converter to meet the specifications
   - the feedback resistances R_1 and R_2 to achieve an output voltage of $3.3\ V$
   - the value of the resistance R_m modeling the microcontroller drawing a nominal current
   - the values of R and C for the output voltage control, limiting the duty cycle at startup to $\frac{\alpha_n}{2}$ and a time constant of the controller 10 times higher than the time constant of the uncorrected system

2.2 Circuit Simulation

Here is a brief summary of the LTSpice interface. For more information, you can refer to the Analog Device page: Analog Device Website

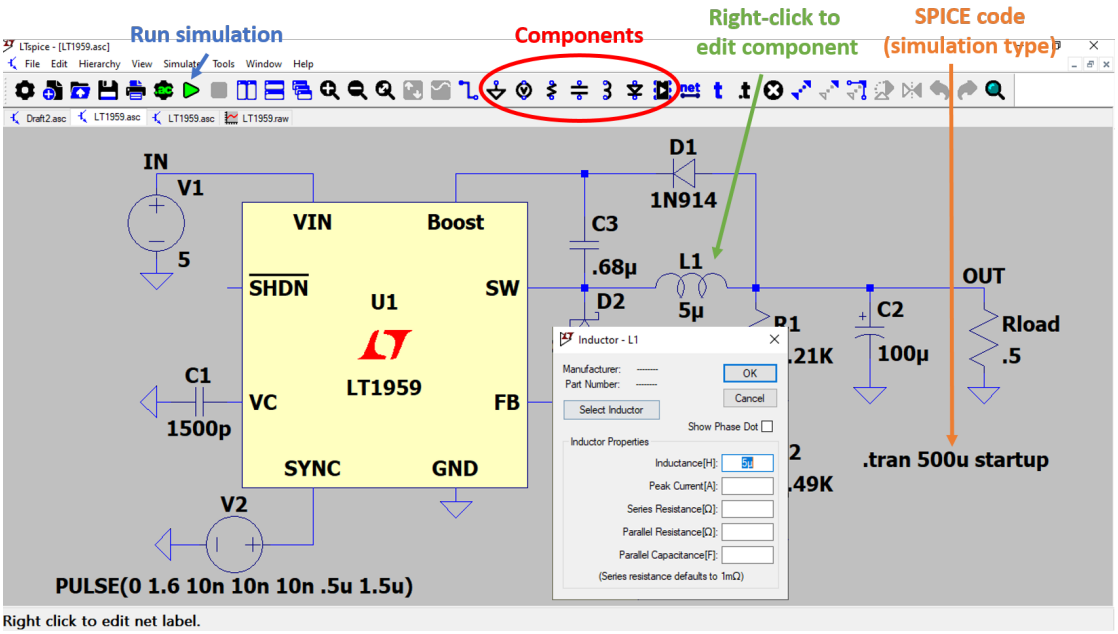

- Create a new *Schematic* and place the **LT1959**.
- Create the circuit from the datasheet by right-clicking on the component ⇒ "*Open Example Circuit*"
- Modify the circuit to match the datasheet. The "*SYNC*" pin will not be used.
- Adjust the component values to meet the specifications.
- Perform a transient simulation. To do this, go to "*Simulate*" ⇒ "*Configure Analysis*" ⇒ "*Transient*" and run a simulation for 3 ms.

1. Verify the switching frequency of the converter
2. Verify that the specifications are met: output voltage, current ripple, voltage ripple
3. Does the converter operate in continuous or discontinuous conduction mode?

2.3 Component Influence

1. Measure the current ripple in L_1 and the output voltage ripple for different values of L_1. Comment.

2. Measure the output voltage ripple for different values of C_1. Comment.

3. Determine the value of L_1 for critical conduction mode. Verify by simulation.

2.4 System Speed and Stability

1. Modify the value of C and measure the 5% response time. Comment.

2. By modifying the value of R, determine the maximum resistance value at which the system becomes unstable.

3. Add a current generator in parallel with the resistance R_s to generate a current pulse (once the system is in steady state). This pulse can model a sudden current demand from the system powered by the Buck. Determine the new value of R at which the system becomes unstable during a disturbance.

3 4 quandrants chopper

3.1 General Description

The general schematic of the device is shown in the following figure:

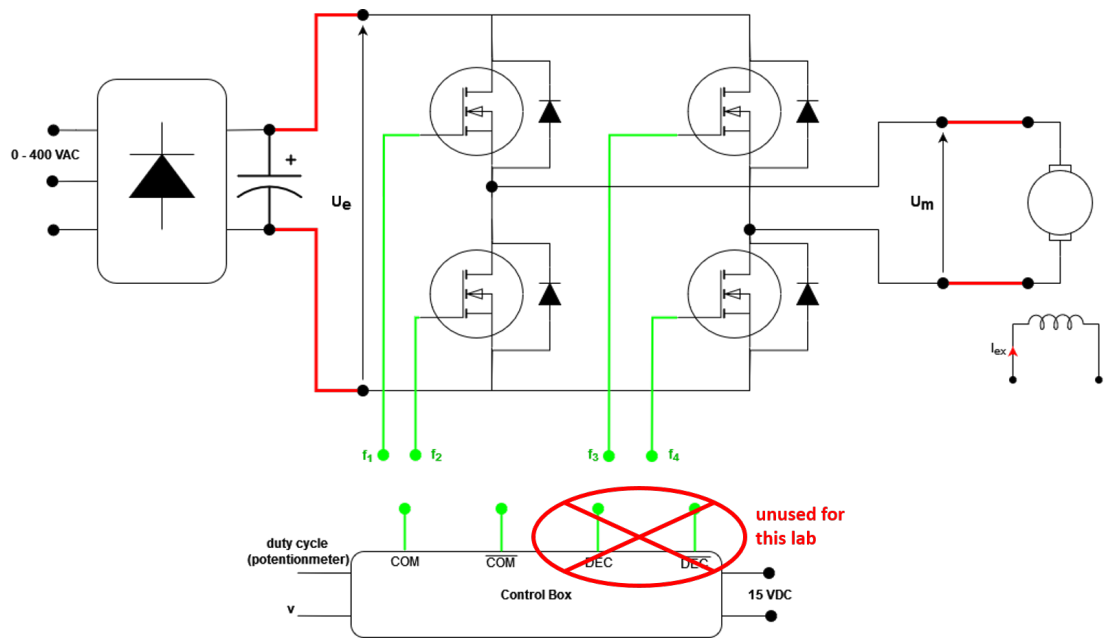

The power supply U_E is achieved by a three-phase rectification of the 50 Hz network, variable up to 400 V using an autotransformer, followed by a filtering capacitor of value C. The DC machine has independent excitation which will be kept constant with an excitation current equal to its nominal value.

The "rectifier-chopper" assembly is realized within an integrated SEMIKRON device equipped with an external control system allowing for synchronous or delayed complementary control on each of the two "bridge arms."

The control device generates PWM signals whose duty cycle can be controlled using a potentiometer or an external voltage $v(t)$ **between 0 and 5V**.

3.2 Preparation

The chopper is controlled with the command signals f_1, f_2, f_3, and f_4 below.

1. Plot the evolution of the chopper output voltage $U_m(t)$ assuming that the input voltage $U_e(t)$ is perfectly constant.

2. Calculate the average value of $U_m(t)$ as a function of the input voltage U_e (assumed constant) and α.

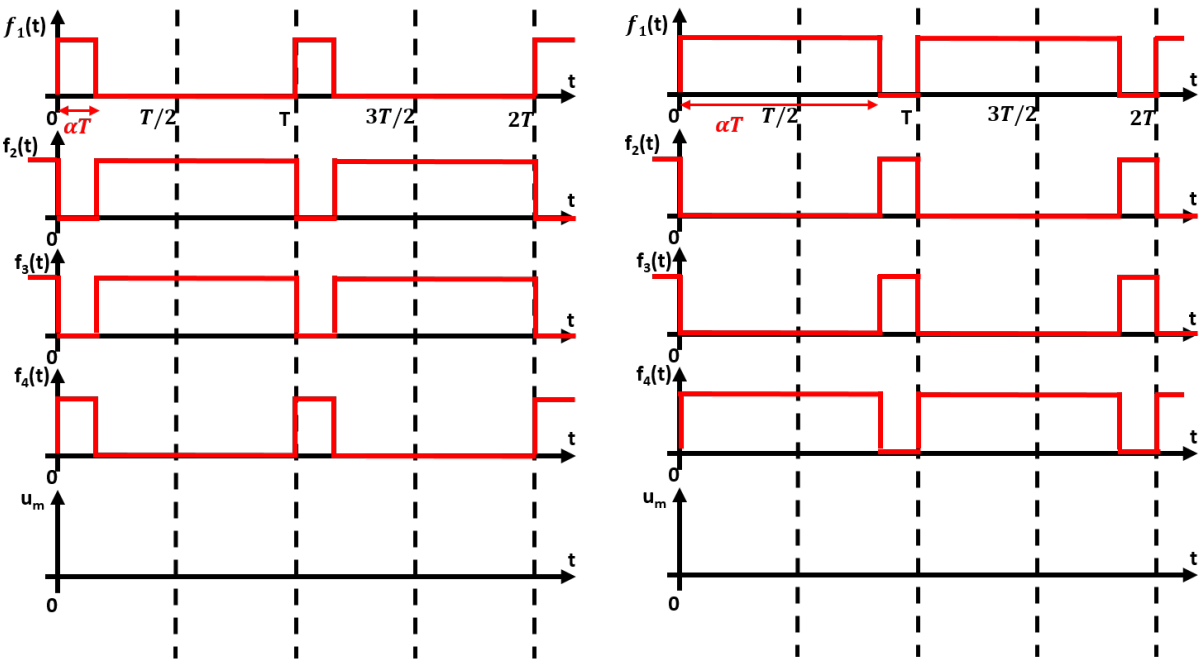

3.3 Assembly Realization

1. Record the characteristics of the DC machine and deduce the value of the rectified DC voltage U_E necessary to exploit the entire speed range of this machine in both directions. This "theoretical" value of U_E will be increased by 20% to account for voltage drops and duty cycle limitations inherent to the control box.

2. Record the shape of the control signals labeled COM and $\overline{COM}$ on the control box. (the DEC and $\overline{DEC}$ signals will not be used) **Ensure that the duty cycle is different from 50%**. Deduce:
   - The connection of the control signals COM and $\overline{COM}$
   - The shape of the chopper output voltage, particularly its amplitude and frequency.

3. Plot the control characteristic of this command, i.e., the duty cycle of the COM command as a function of the external control voltage (**variable in the range 0 to 5V**). Deduce the value of this voltage that imposes the machine's stop.

4. Complete the assembly with the following recommendations:
   - leave the DC machine unloaded;
   - if the machine has separate excitation, first connect its excitation and check the corresponding current value;
   - set the chopper control to impose a 50% duty cycle;
   - gradually increase the network voltage (autotransformer) until the desired rectified voltage U_E is reached;
   - test the proper functioning of the device by slowly varying the chopper control in both directions and continuously monitoring the motor armature current.

   Since the assembly is quite "voluminous" to realize, care must be taken to wire the different blocks together in an easily verifiable manner. The various measuring devices must be readable, and the oscilloscope should be as far away as possible from the power connections.

5. If the motor braking is too fast, the DC bus voltage U_E increases. Why?

   In the presence of the instructor, observe this phenomenon.

3.4 Static Characterization of the Device

Always ensuring that U_E remains constant, plot the chopper characteristic $< U_m >= f(\alpha)$, with the motor left unloaded (α represents the duty cycle of the COM command). Carefully record the extreme possible duty cycle values, α_{min} and α_{max}.

3.5 Dynamic Study of the Chopper

In this study, a duty cycle of the type: $\alpha(t) = \alpha_0 + \Delta\alpha(t)$ is generated where $\Delta\alpha(t)$ is a "slow" variation and $\alpha_0 = 0.5$. For this, the control voltage used to drive the device includes a DC component v_0 and a low-frequency AC component, denoted $\Delta v(t)$. The motor will always be left unloaded **and care will be taken not to switch the functions of the control generator with a powered assembly** to avoid overcurrents.

1. Use the previous control characteristic to determine v_0 and $\Delta v(t)$ to vary the duty cycle linearly between 0.25 and 0.75. Gradually apply this voltage to the device (slowly increasing amplitude), at a cycle frequency of about 0.3 Hz (frequency of the Δv signal).

2. Simultaneously record the motor armature current i_M and the voltage measured by the tachogenerator v_T (image of the speed Ω). How to interpret these curves using the oscilloscope's XY mode (with sufficient persistence)? The measurement can be improved by inserting a low-pass filter on the current measurement to eliminate its ripple. How to choose the cutoff frequency of this filter?

3. Simultaneously observe the speed, the armature current, and the input voltage $U_e(t)$. Explain the variations observed on $U_e(t)$ and relate them to the 4 quadrants of operation.

3.6 Inverter

Replace the motor with a series R - L load. We want to power this load with the North American electrical network (110V / 60 Hz) from our network (230V / 50 Hz). Therefore, we will use the chopper as a single-phase "inverter" to recreate this network. For this, a duty cycle of the form $\alpha(t) = \alpha_0 + \delta\alpha.sin(\omega t)$ will be used.

1. Determine α_0, $\delta\alpha$, and ω to recreate the desired network.

2. Apply this control and power the load. Observe the output voltage U_m of the chopper and U_r the voltage across the resistor.

4 Flyback converter

The study model includes, in addition to the transistor control circuit, the following setup:

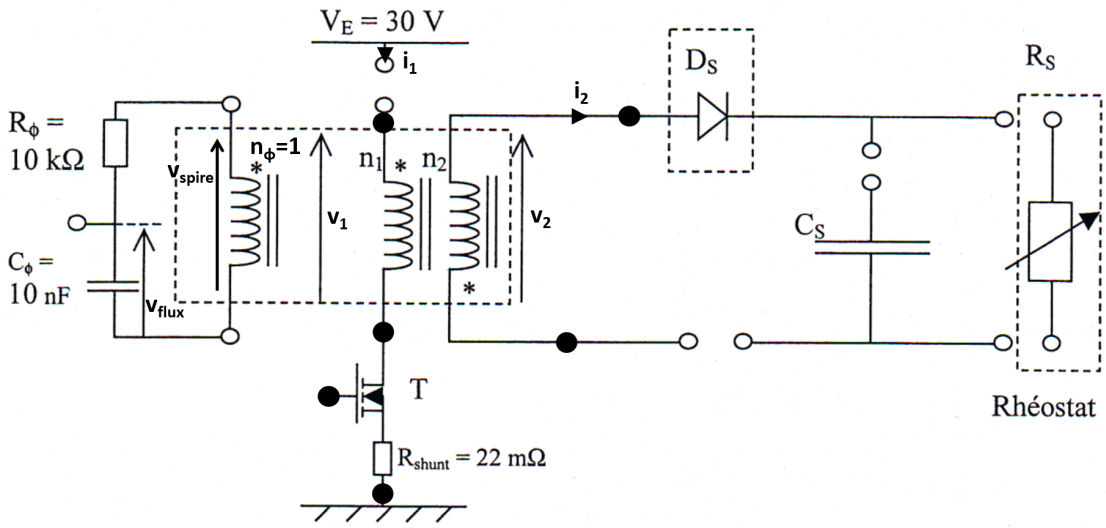

Test points • allow visualization of various signals, particularly the MOSFET transistor control signal.

The 3 windings are on the same ETD29/16/10 magnetic core made of N27 type ferrite, whose documentation is attached. This core can be equipped with an adjustable air gap using non-magnetic shims. In this case, the relationship between the thickness s of the air gap and the specific inductance value A_L is given by the following relation where K_1 and K_2 are two constants provided in the documentation:

$$s = (\frac{A_L}{K_1})^{\frac{1}{K_2}}$$

The missing connections should be made using "jumpers" to visualize the currents using appropriate probes. The load rheostat can be either 250 Ω or 330 Ω interchangeably, and care should be taken to **not connect the voltage V_E without the presence of this load**.

Note the presence of a flux measurement circuit made with a single turn connected to an R-C integrator circuit. The voltage v_{flux} thus allows visualization of the flux ripple in the magnetic circuit.

The transistor control device is shown in the figure below:

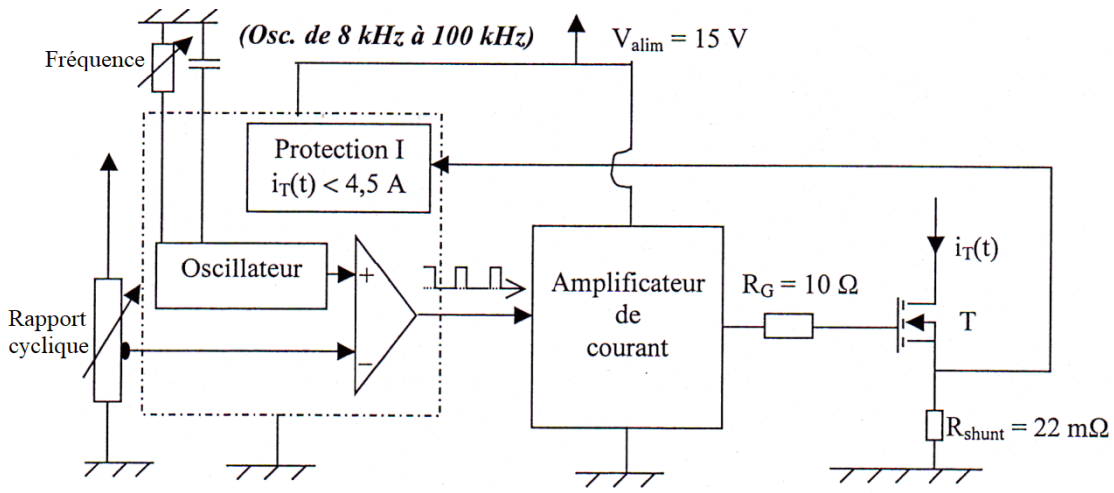

A potentiometer allows adjusting the frequency (do not go below 15 kHz), and a second one allows adjusting the duty cycle. The latter is equipped with an active current limitation set at 4.5A, achieved by measuring the voltage across a 22 mΩ shunt. The power supply for this control is provided by an independent voltage source of $V_{alim} = 15V$.

4.1 Preparation

Assume the transistor is controlled by a PWM signal with a duty cycle $\alpha = 0.25$. Also, assume that the converter operates in **total demagnetization mode** for the transformer. The input voltage V_E is assumed constant. For the preparation, only the steady state will be studied.

1. Complete the timing diagrams below by plotting:
   - the flux φ in the transformer
   - the current i_1 supplied by the power source
   - the current i_2 in the diode
   - the voltage v_2 at the transformer output

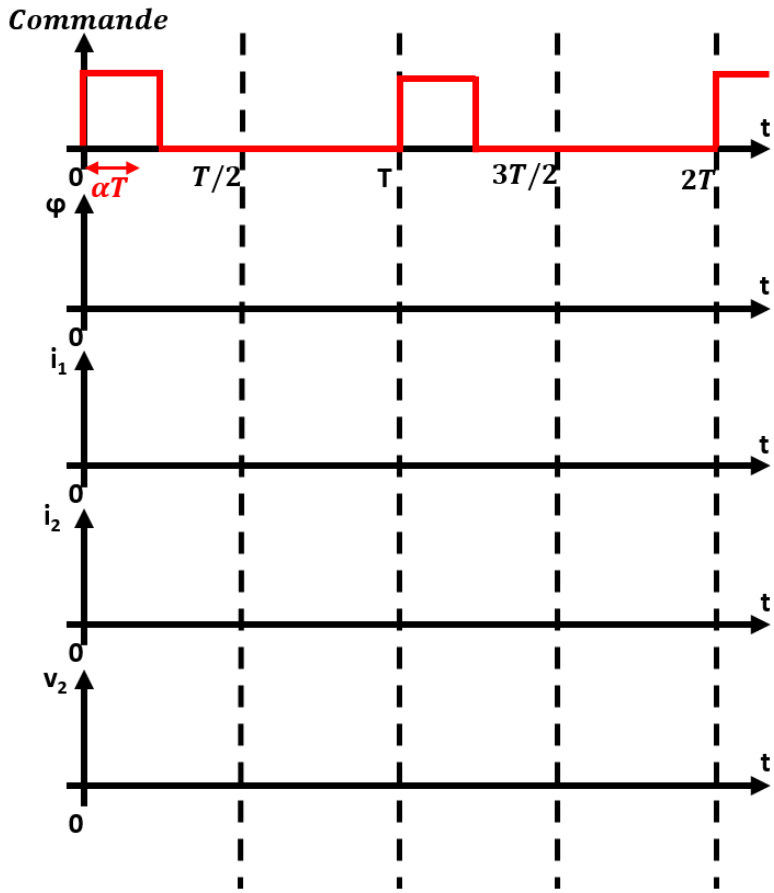

2. Assume the time constant of the $R_\phi - C_\phi$ filter is much larger than the switching period of the chopper. Show that v_{flux} allows visualization of the flux ripple in the transformer. Determine the flux ripple $\Delta\varphi$ as a function of α, T, and the value of v_{spire} over the interval $0 < t < \alpha T$.

Throughout the lab session, the following precautions should be taken:

- use two independent sources to provide V_{alim} and the "power" supply V_E: **carefully set the current limit of the latter to 2 A**
- keep the V_{alim} voltage present throughout the session but lower the V_E voltage at each connection modification
- do not lower the switching frequency below 15 kHz
- when multiple voltage measurements are made simultaneously with a voltage probe, **be careful not to create a short circuit**. Indeed, the voltage probes are not isolated from each other, so the potential references of the probes are linked via the oscilloscope

4.2 Magnetic Study, Waveforms

The following measurements will be made with the load rheostat at its maximum value (reduced load) and ensuring operation in total demagnetization mode, for a duty cycle close to its maximum value.

1. Set the switching frequency to 50 kHz and the duty cycle to its maximum value (which will be noted). Observe the voltage across the flux measurement turn v_{spire} as well as the voltage v_{flux}. Deduce the peak-to-peak excursion ΔB of the magnetic induction in the circuit using the documentation ($\Delta B = B_{max} - B_{min}$).
2. By comparing the voltages v_{spire} and v_1, then v_2, determine the number of turns n_1 and n_2.
3. Simultaneously observe the currents i_1 and i_2 and compare them to the flux evolution.
4. Deduce the value of the primary magnetizing inductance, noted L_1.
5. From the measurements of n_1 and L_1 and using the documentation, determine the specific inductance value A_L and the thickness of the air gap. What is the role of this air gap?

4.3 Static Curves

The purpose of these measurements is to plot the network of static characteristics at the output of the power supply. The switching frequency is initially kept constant at 50 kHz.

1. For several values of the duty cycle (e.g., α_{max}, 0.3, 0.2, and 0.1), modify the load rheostat resistance to vary the average current supplied between its minimum value (obtained with the rheostat at maximum) and a maximum value of 2 A. Record the average values of the current supplied by the power source V_E, I_E, the output current I_S, and the output voltage V_S. Carefully note the operating point corresponding to the change in the power supply's demagnetization regime.

2. Deduce the plot of the characteristics $V_S(I_S)$ and $P_S(I_S)$ (output power) parameterized by α. Also plot the power transfer characteristics $P_S(P_E)$ and deduce the efficiency. Highlight the operating zones in partial demagnetization and total demagnetization.

3. Observe the waveforms of the voltage V_{CE} across the transistor and the current i_1 through it. Deduce the constraints on the transistor.

4.4 Additional Measurements

Keep the load rheostat at its maximum value and the switching frequency at 50 kHz.

1. Simultaneously observe the current i_1 and the voltage across the transistor v_T. Deduce the constraints on this transistor.

2. Simultaneously observe the current in the filter capacitor I_{CS} and the output voltage v_S. Deduce the value of the filter capacitor C_S.

5 Forward converter

The study model includes, in addition to the transistor control circuit, the following setup:

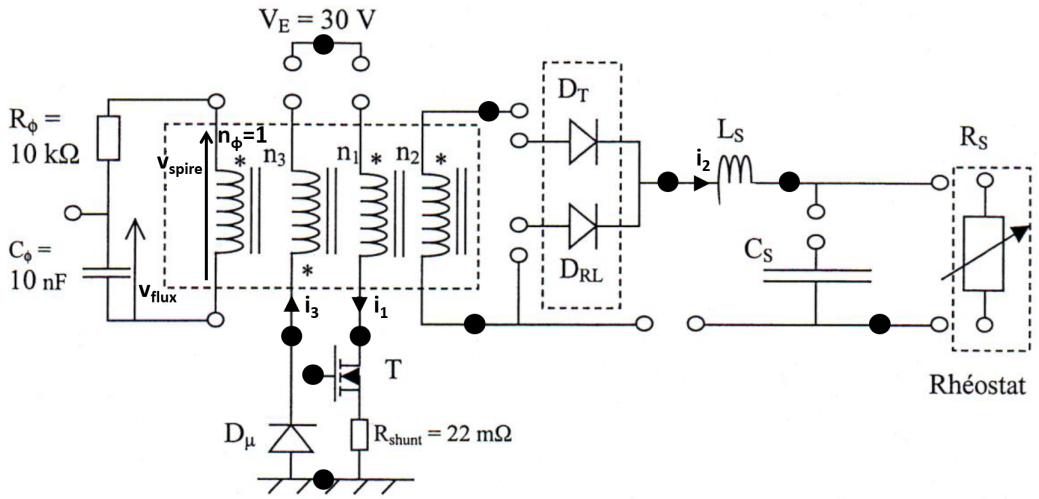

Test points • allow visualization of various signals, particularly the MOSFET transistor control signal.

The 4 windings are on the same ETD29/16/10 magnetic core made with N27 type ferrite, whose documentation is attached. This core can be equipped with an adjustable air gap using non-magnetic shims. In this case, the relationship between the thickness s of the air gap and the value A_L of the specific inductance is given by the following relation where K_1 and K_2 are two constants provided in the documentation:

$$s = (\frac{A_L}{K_1})^{\frac{1}{K_2}}$$

The missing connections should be made using "jumpers" to visualize the currents using appropriate probes. Care should be taken to **never disconnect the demagnetization winding**. The load rheostat can be either 250 Ω or 330 Ω indifferently.

Note the presence of a flux measurement circuit made with a single turn connected to an R-C integrator circuit. The voltage v_{flux} thus allows visualization of the flux ripple in the magnetic circuit.

The transistor control device is identical to that of the Flyback power supply (see TP "Flyback Power Supply").

5.1 Preparation

Assume the transistor is controlled by a PWM signal with a duty cycle $\alpha = 0.25$. Also assume that the converter operates in **total demagnetization mode** for the transformer and that no load is connected to the converter output. The input voltage V_E is assumed to be constant. The study will focus only on the steady state.

1. Complete the timing diagrams below by plotting:
   - the flux φ in the transformer
   - the current i_1 supplied by the power supply
   - the current i_3 in the demagnetization winding
   - the voltage v_2 at the transformer output

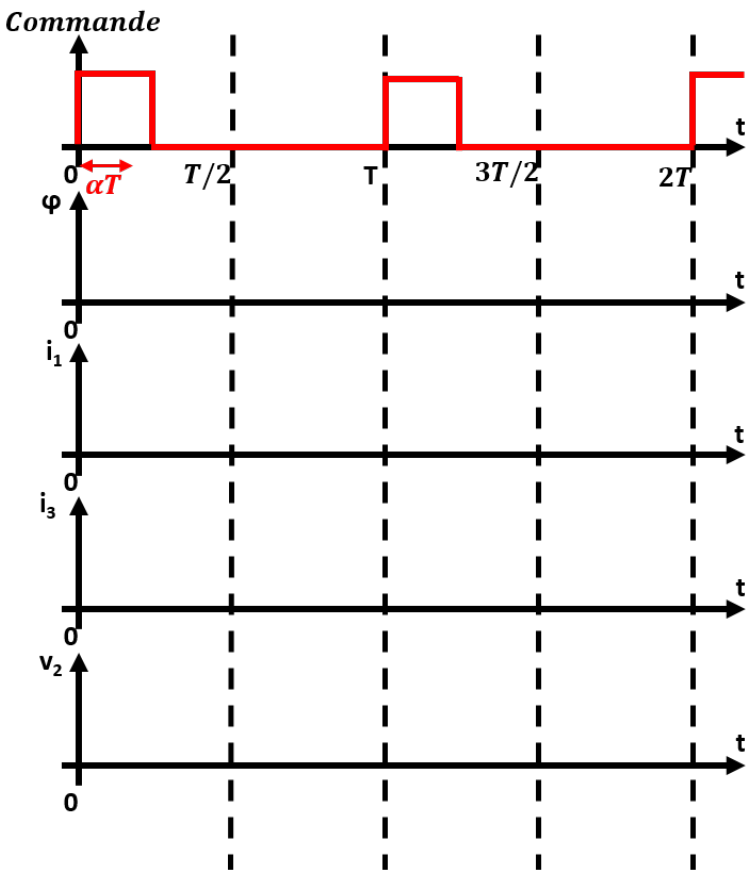

2. Assume the time constant of the $R_\phi - C_\phi$ filter is much larger than the switching period of the chopper. Show that v_{flux} allows visualization of the flux ripple in the transformer. Determine the flux ripple $\Delta\varphi$ as a function of α, T, and the value of v_{spire} over the interval $0 < t < \alpha T$.

Throughout the TP, the following precautions must be taken:

- use two independent sources to achieve V_{alim} and the "power" supply V_E: **carefully set the current limit of the latter to 2 A**
- keep the V_{alim} voltage present throughout the session but lower the V_E voltage at each connection modification
- do not lower the switching frequency below 15 kHz
- when multiple voltage measurements are made simultaneously with a voltage probe, **be careful not to create a short circuit**. Indeed, the voltage probes are not isolated from each other, so the potential references of the probes are linked via the oscilloscope
- **never disconnect the demagnetization winding**

5.2 No-load operation

In this first part of the study, there is no load at the power supply output.

1. Set the switching frequency to 50 kHz and the duty cycle to its maximum value (which will be noted). Observe the voltage across the flux measurement turn v_{spire} as well as the voltage v_{flux}. Deduce the peak-to-peak excursion ΔB of the magnetic induction in the circuit using the documentation ($\Delta B = B_{max} - B_{min}$).
2. Verify complete demagnetization at each period by simultaneously observing the currents i_1 and i_3. Compare these observations with those of the voltage v_{flux}.
3. By simultaneously observing the current i_1 and the voltage v_1, determine the value of the primary magnetizing inductance, noted L_1. What is the value of the used air gap?
4. By comparing the voltages v_{spire} and v_1, then v_2 and v_3 (the voltages v_i are measured across the windings of n_i turns), determine the number of turns n_1, n_2, and n_3. Is this result consistent with the value of L_1 found (use the magnetic core documentation)?
5. By simultaneously observing the current i_1 and the voltage v_{flux}, gradually decrease the switching frequency to 20 kHz while maintaining the maximum duty cycle. What happens?

5.3 Loaded operation

Connect the load rheostat after setting it to a value of 30Ω to perform the following measurements. Do not forget to connect all the "open" connections allowing the measurement of the various secondary currents. Set the switching frequency back to 50 kHz and the duty cycle to its maximum value.

1. Simultaneously and successively observe the following pairs of quantities:
   - the secondary voltage v_2 and the voltage across D_{RL}, v_{DRL}
   - the output current i_S and the voltage across D_{RL}
   - the currents in the two secondary diodes, i_{DRL} and i_{DT}

   What can be said about the operating mode of these secondary diodes?

2. Simultaneously observe the current i_{LS} in the inductor L_S and the voltage v_{DRL}. Deduce the value of this output inductance L_S. What can be said about its sizing?

3. Simultaneously observe the current in the filtering capacitor i_{CS} and the output voltage v_S. Deduce the value of the filtering capacitor C_S.

5.4 Static curves

The purpose of these measurements is to plot the network of static characteristics at the power supply output. The switching frequency is kept constant at 50 kHz.

1. For several values of the duty cycle (e.g., α_{max}, 0.3, 0.2, 0.1), modify the load rheostat resistance to vary the average current supplied between its minimum value (obtained with the rheostat at maximum) and a maximum value of 2 A. Then record the average values of the current supplied by the power supply V_E, I_E, the output current I_S, and the output voltage V_S.

2. Deduce the plot of the characteristics $V_S(I_S)$ parameterized by α. Also plot the power transfer characteristics $P_S(P_E)$ and deduce the efficiency.

- To IEC 63093-6
- For SMPS transformers with optimum weight/performance ratio at small volume
- Delivery mode: single units

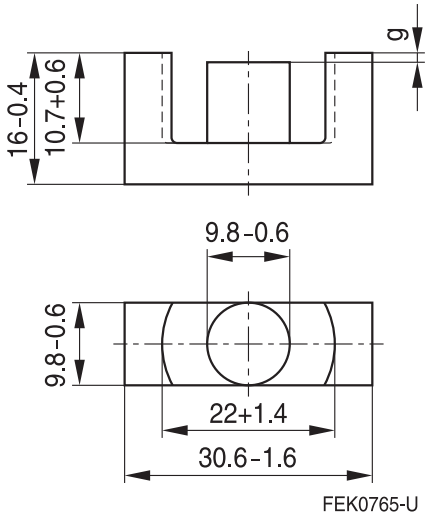

Magnetic characteristics (per set)

$\Sigma l/A$ = 0.93 mm^{-1}
l_e = 70.4 mm
A_e = 76.0 mm^2
A_{min} = 71.0 mm^2
V_e = 5350 mm^3

Approx. weight 28 g/set

Ungapped

Material	A_L value nH	μ_e	P_V W/set	Ordering code
N27	2000 +30/–20%	1470	< 1.04 (200 mT, 25 kHz, 100 °C)	B66358G0000X127
N87	2200 +30/–20%	1610	< 2.80 (200 mT, 100 kHz, 100 °C)	B66358G0000X187
N97	2250 +30/–20%	1670	< 2.40 (200 mT, 100 kHz, 100 °C)	B66358G0000X197

Gapped (A_L values/air gaps examples)

Material	g mm	A_L value approx. nH	μ_e	Ordering code ** = 27 (N27) = 87 (N87)
N27, N87	0.10 ±0.02	621	457	B66358G0100X1**
	0.20 ±0.02	383	281	B66358G0200X1**
	0.50 ±0.05	201	148	B66358G0500X1**
	1.00 ±0.05	124	91	B66358G1000X1**

The A_L value in the table applies to a core set comprising one ungapped core (dimension g = 0 mm) and one gapped core (dimension g > 0 mm).

Other A_L values/air gaps and materials available on request — see Processing remarks on page 6.

Calculation factors (for formulas, see *"E cores: general information"*)

Material	Relationship between air gap – A_L value		Calculation of saturation current			
	K1 (25 °C)	K2 (25 °C)	K3 (25 °C)	K4 (25 °C)	K3 (100 °C)	K4 (100 °C)
N27	124	–0.7	195	–0.847	181	–0.865
N87	124	–0.7	192	–0.796	176	–0.873

Validity range: K1, K2: 0.10 mm < s < 2.00 mm
K3, K4: 70 nH < A_L < 680 nH