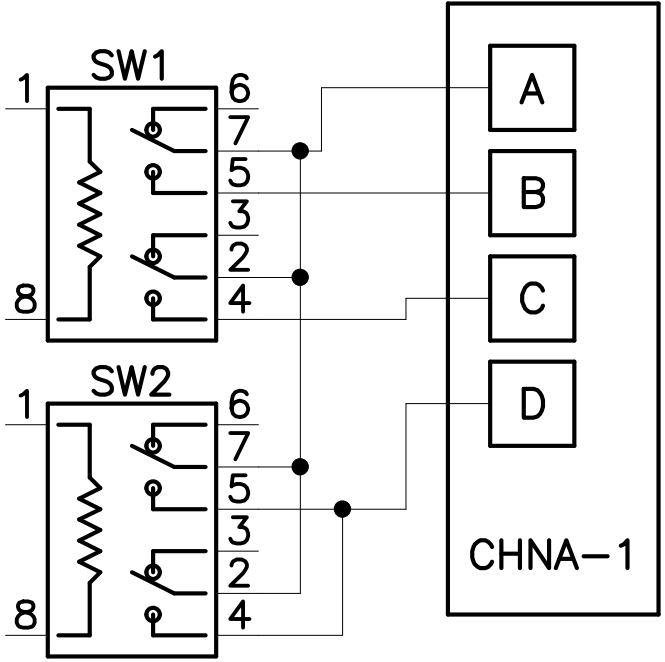
SW1
1
8
6
7
5
3
2
4
SW2
1
8
6
7
5
3
2
4
A
B
C
D
CHNA–1

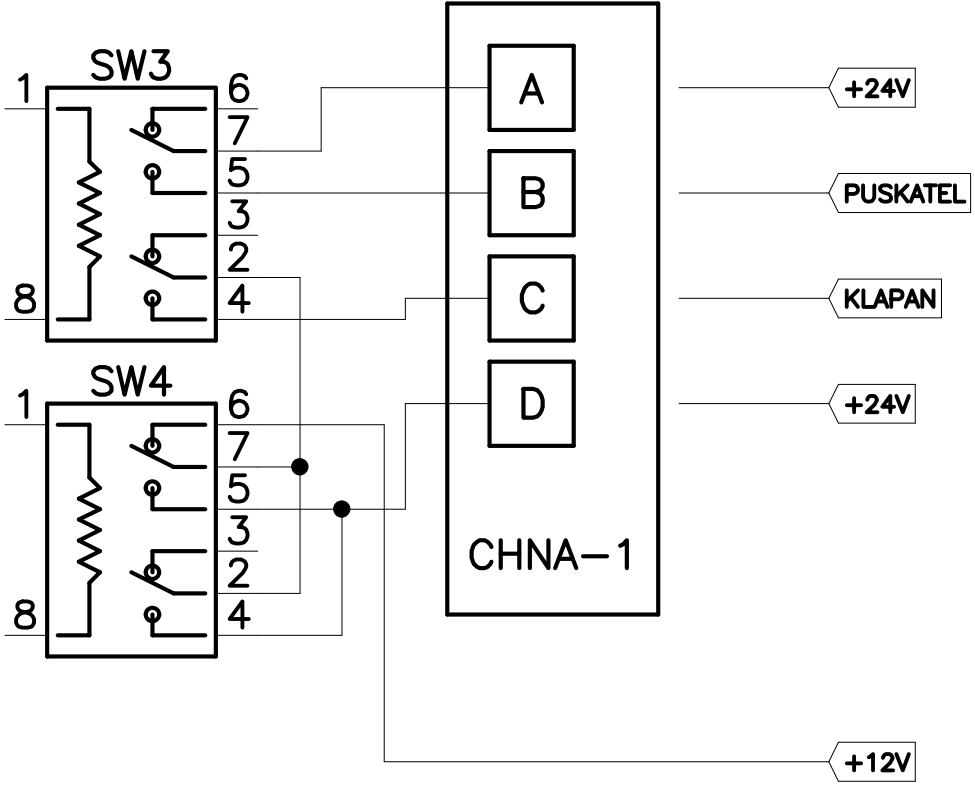
SW3
1
8
6
7
5
3
2
4
SW4
1
8
6
7
5
3
2
4
A
B
C
D
CHNA–1
+24V
PUSKATEL
KLAPAN
+24V
+12V

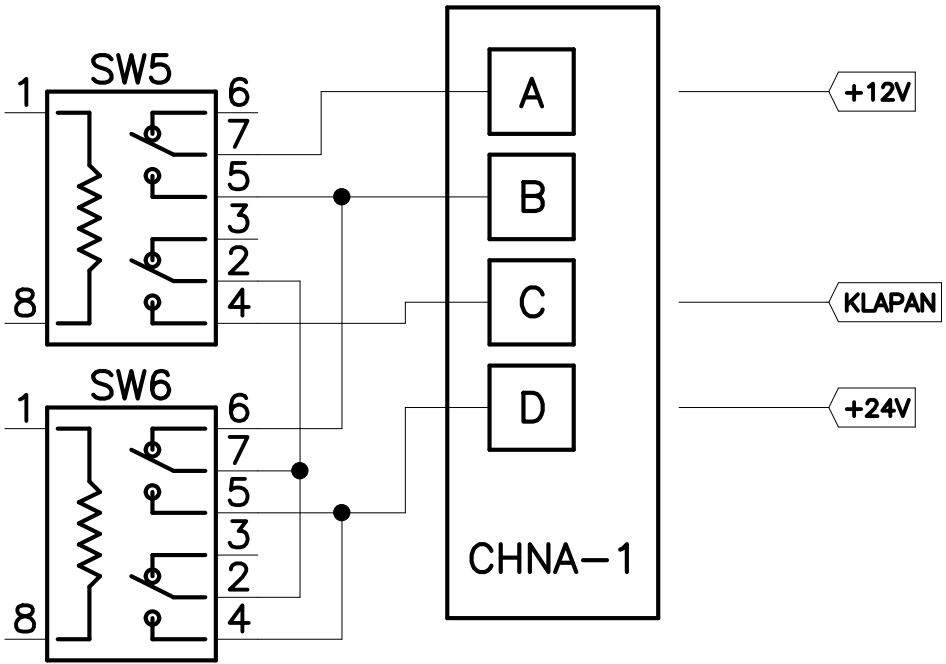
SW5
1
8
6
7
5
3
2
4
SW6
1
8
6
7
5
3
2
4
A
B
C
D
CHNA–1
+12V
KLAPAN
+24V