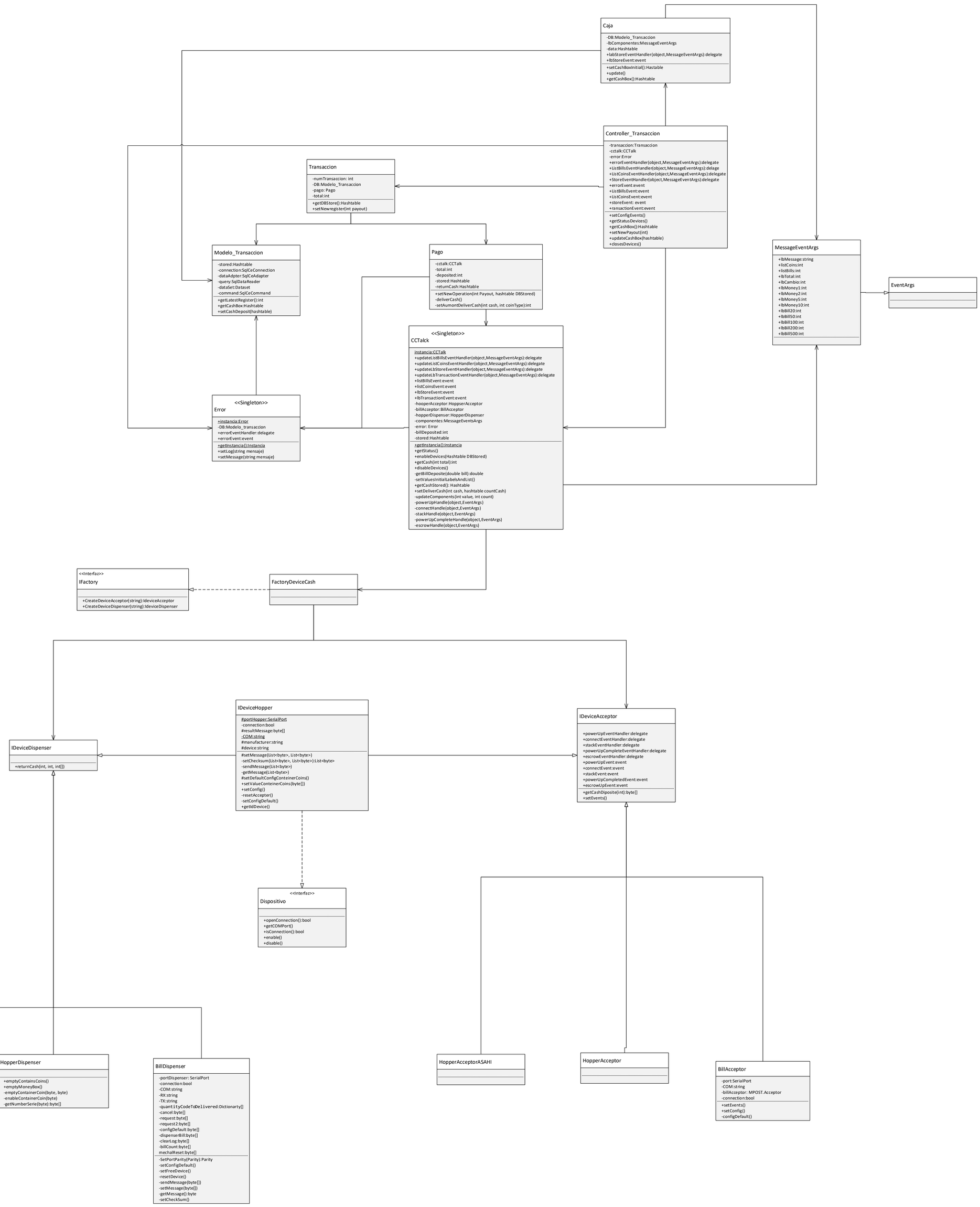
Caja
-DB:Modelo_Transaccion
-lbComponentes:MessageEventArgs
-data:Hashtable
+labStoreEventHandler(object,MessageEventArgs):delegate
+lbStoreEvent:event
+setCashBoxInitial():Hastable
+update()
+getCashBox():Hashtable
Controller_Transaccion
-transaccion:Transaccion
-cctalk:CCTalk
-error:Error
+errorEventHandler(object,MessageEventArgs):delegate
+ListBillsEventHandler(object,MessageEventArgs):delage
+ListCoinsEventHandler(object,MessageEventArgs):delegate
+StoreEventHandler(object,MessageEventArgs):delegate
+errorEvent:event
+ListBillsEvent:event
+ListCoinsEvent:event
+storeEvent: event
+ransactionEvent:event
+setConfigEvents()
+getStatusDevices()
+getCashBox():Hashtable
+setNewPayout(int)
+updateCashBox(hashtable)
+closesDevices()
Transaccion
-numTransaccion: int
-DB:Modelo_Transaccion
-pago: Pago
-total:int
+getDBStore():Hashtable
+setNewregister(int payout)
Modelo_Transaccion
-stored:Hashtable
-connection:SqlCeConnection
-dataAdpter:SqlCeAdapter
-query:SqlDataReader
-dataSet:Dataset
-command:SqlCeCommand
+getLatestRegister():int
+getCashBox:Hashtable
+setCashDeposit(hashtable)
Pago
-cctalk:CCTalk
-total:int
-deposited:int
-stored:Hashtable
-returnCash:Hashtable
+setNewOperation(int Payout, hashtable DBStored)
-deliverCash()
-setAumontDeliverCash(int cash, int coinType):int
MessageEventArgs
+lbMessage:string
+listCoins:int
+listBills:int
+lbTotal:int
+lbCambio:int
+lbMoney1:int
+lbMoney2:int
+lbMoney5:int
+lbMoney10:int
+lbBill20:int
+lbBill50:int
+lbBill100:int
+lbBill200:int
+lbBill500:int
EventArgs
<<Singleton>>
Error
+instancia:Error
-DB:Modelo_transaccion
+errorEventHandler:delagate
+errorEvent:event
+getInstancia():instancia
+setLog(string mensaje)
+setMessage(string mensaje)
<<Singleton>>
CCTalck
instancia:CCTalk
+updateListBillsEventHandler(object,MessageEventArgs):delegate
+updateListCoinsEventHandler(object,MessageEventArgs):delegate
+updateLbStoreEventHandler(object,MessageEventArgs):delegate
+updateLbTransactionEventHandler(object,MessageEventArgs):delegate
+listBillsEvent:event
+listCoinsEvent:event
+lbStoreEvent:event
+lbTransactionEvent:event
-hooperAcceptor:HoppserAcceptor
-billAcceptor:BillAcceptor
-hopperDispenser:HopperDispenser
-componentes:MessageEventsArgs
-error: Error
-billDeposited:int
-stored:Hashtable
+getInstancia():instancia
+getStatus()
+enableDevices(Hashtable DBStored)
+getCash(int total):int
+disableDevices()
-getBillDeposite(double bill):double
-setValuesInitialLabelsAndList()
+getCashStored(): Hashtable
+setDeliverCash(int cash, hashtable countCash)
-updateComponents(int value, int count)
-powerUpHandle(object,EventArgs)
-connectHandle(object,EventArgs)
-stackHandle(object,EventArgs)
-powerUpCompleteHandle(object,EventArgs)
-escrowHandle(object,EventArgs)
<<Interfaz>>
IFactory
+CreateDeviceAcceptor(string):IdeviceAcceptor
+CreateDeviceDispenser(string):IdeviceDispenser
FactoryDeviceCash
IDeviceDispenser
+returnCash(int, int, int[])
IDeviceHopper
#portHopper:SerialPort
-connection:bool
#vaultMessage:byte[]
-COM:string
#manufacturer:string
#device:string
#setMessage(List<byte>, List<byte>)
-setChecksum(List<byte>, List<byte>):List<byte>
-sendMessage(List<byte>)
-getMessage(List<byte>)
#setDefaultConfigConteinerCoins()
+setValueConteinerCoins(byte[])
+setConfig()
-resetAccepter()
-setConfigDefault()
+getIdDevice()
IDeviceAcceptor
+powerUpEventHandler:delegate
+connectEventHandler:delegate
+stackEventHandler:delegate
+powerUpCompleteEventHandler:delegate
+escrowEventHandler:delegate
+powerUpEvent:event
+connectEvent:event
+stackEvent:event
+powerUpCompletedEvent:event
+escrowUpEvent:event
+getCashDiposite(int):byte[]
+setEvents()
<<Interfaz>>
Dispositivo
+openConnection():bool
+getCOMPort()
+isConnection():bool
+enable()
+disable()
HopperDispenserASAHI
-emptyContainesCoins()
-emptyContainerCoin(byte,byte)
-enableContainerCoin(byte)
-getNumberSerie(byte):byte[]
HopperDispenser
+emptyContainsCoins()
+emptyMoneyBox()
-emptyContainerCoin(byte, byte)
-enableContainerCoin(byte)
-getNumberSerie(byte):byte[]
BillDispenser
-portDispenser: SerialPort
-connection:bool
-COM:string
-RX:string
-TX:string
-quantityCodeToDelivered:Dictionarty[]
-cancel:byte[]
-request:byte[]
-request2:byte[]
-configDefault:byte[]
-dispenserBill:byte[]
-clearLog:byte[]
-billCount:byte[]
mechalReset:byte[]
-SetPortParity(Parity):Parity
-setConfigDefault()
-setFreeDevice()
-resetDevice()
-sendMessage(byte[])
-setMessage(byte[])
-getMessage():byte
-setCheckSum()
HopperAcceptorASAHI
HopperAcceptor
BillAcceptor
-port:SerialPort
-COM:string
-billAcceptor: MPOST.Acceptor
-connection:bool
+setEvents()
+setConfig()
-configDefault()

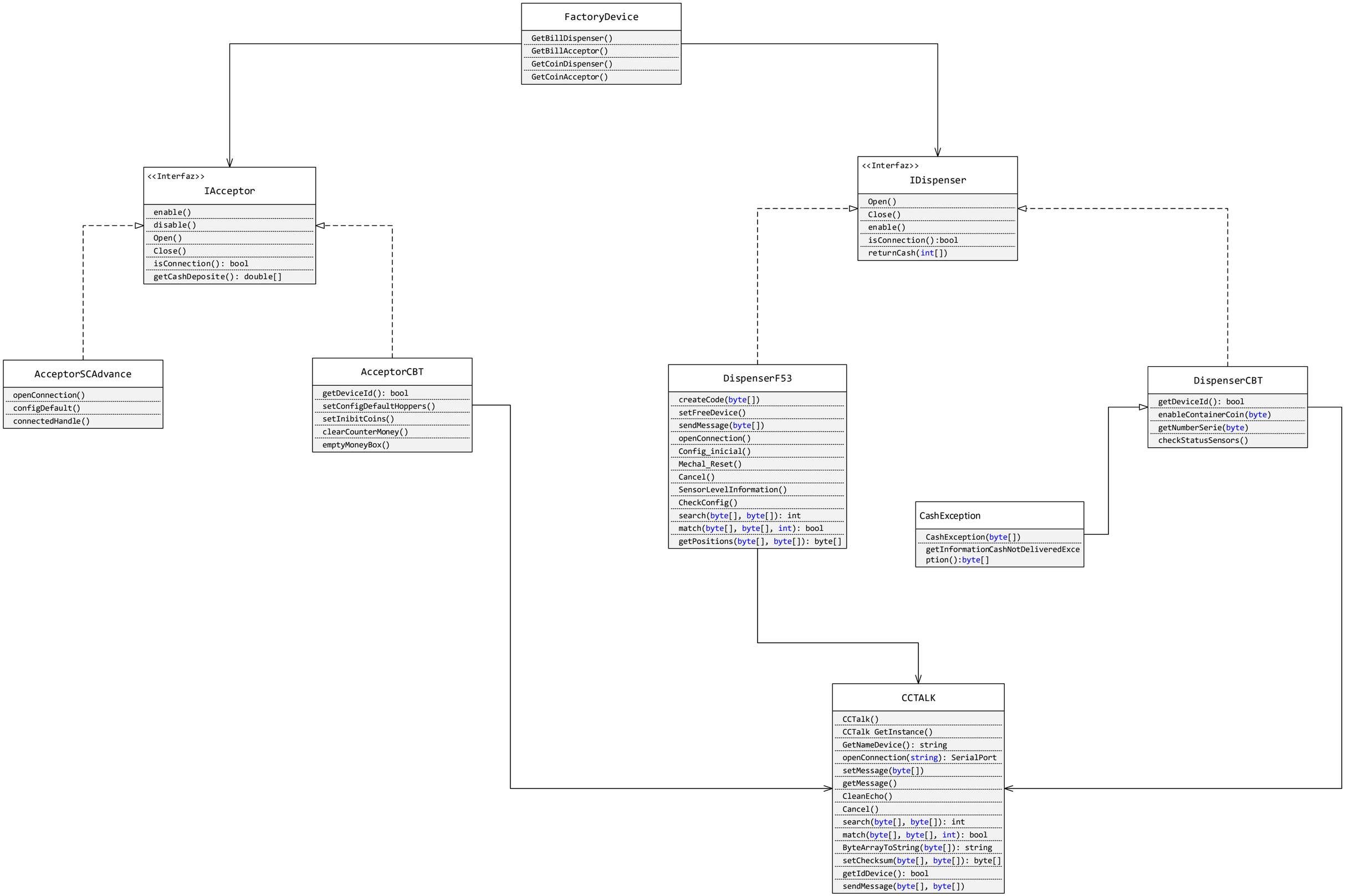
FactoryDevice
GetBillDispenser()
GetBillAcceptor()
GetCoinDispenser()
GetCoinAcceptor()
<<Interfaz>>
IAcceptor
enable()
disable()
Open()
Close()
isConnection(): bool
getCashDeposite(): double[]
<<Interfaz>>
IDispenser
Open()
Close()
enable()
isConnection():bool
returnCash(int[])
AcceptorSCAdvance
openConnection()
configDefault()
connectedHandle()
AcceptorCBT
getDeviceId(): bool
setConfigDefaultHoppers()
setInibitCoins()
clearCounterMoney()
emptyMoneyBox()
DispenserF53
createCode(byte[])
setFreeDevice()
sendMessage(byte[])
openConnection()
Config_inicial()
Mechal_Reset()
Cancel()
SensorLevelInformation()
CheckConfig()
search(byte[], byte[]): int
match(byte[], byte[], int): bool
getPositions(byte[], byte[]): byte[]
DispenserCBT
getDeviceId(): bool
enableContainerCoin(byte)
getNumberSerie(byte)
checkStatusSensors()
CashException
CashException(byte[])
getInformationCashNotDeliveredExce
ption():byte[]
CCTALK
CCTalk()
CCTalk GetInstance()
GetNameDevice(): string
openConnection(string): SerialPort
setMessage(byte[])
getMessage()
CleanEcho()
Cancel()
search(byte[], byte[]): int
match(byte[], byte[], int): bool
ByteArrayToString(byte[]): string
setChecksum(byte[], byte[]): byte[]
getIdDevice(): bool
sendMessage(byte[], byte[])

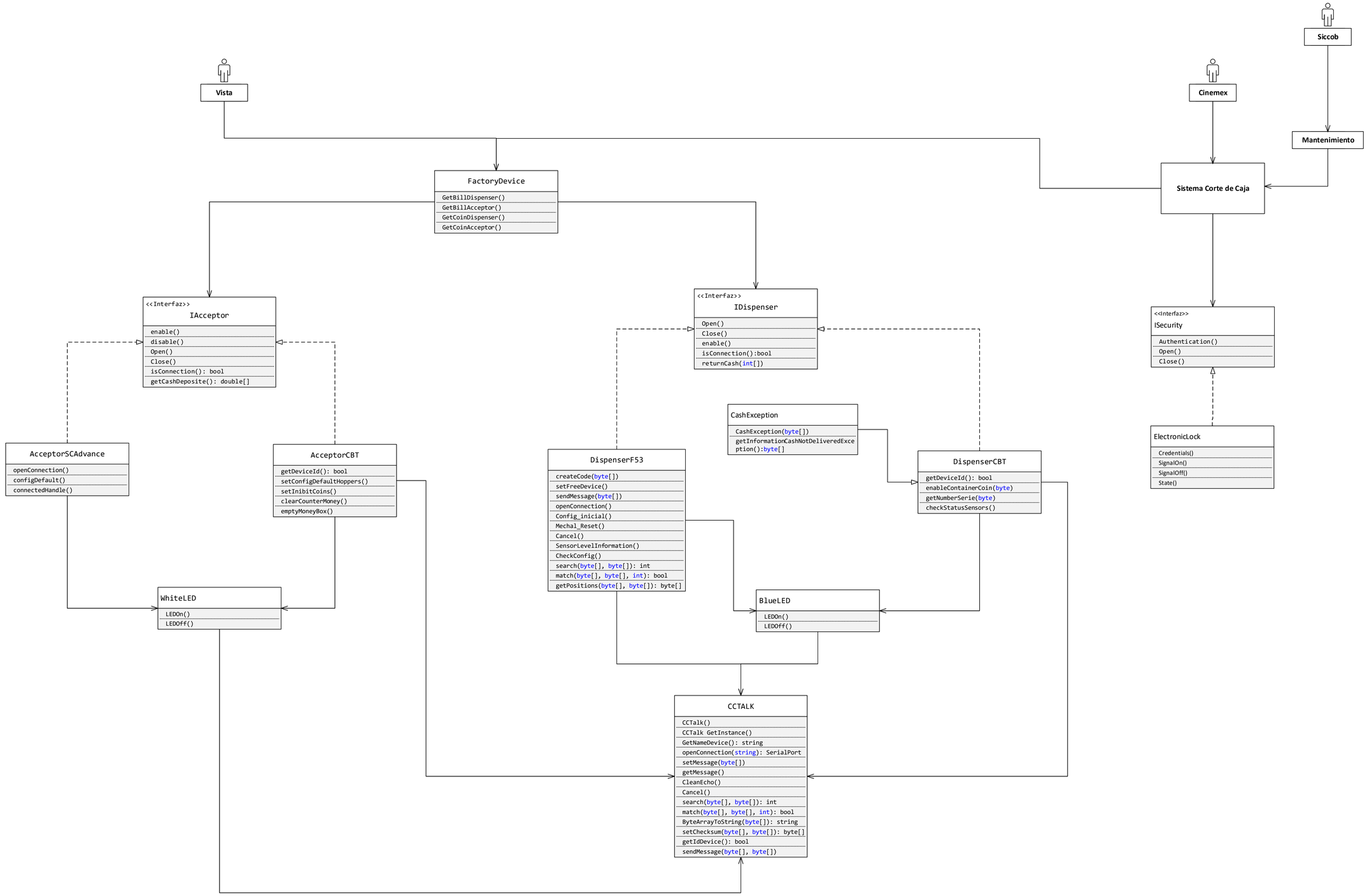
Vista
Cinemex
Siccob
Mantenimiento
Sistema Corte de Caja
FactoryDevice
GetBillDispenser()
GetBillAcceptor()
GetCoinDispenser()
GetCoinAcceptor()
<<Interfaz>>
IAcceptor
enable()
disable()
Open()
Close()
isConnection(): bool
getCashDeposite(): double[]
<<Interfaz>>
IDispenser
Open()
Close()
enable()
isConnection():bool
returnCash(int[])
<<Interfaz>>
ISecurity
Authentication()
Open()
Close()
CashException
CashException(byte[])
getInformationCashNotDeliveredExcepti on():byte[]
ElectronicLock
Credentials()
SignalOn()
SignalOff()
State()
AcceptorSCAdvance
openConnection()
configDefault()
connectedHandle()
AcceptorCBT
getDeviceId(): bool
setConfigDefaultHoppers()
setInibitCoins()
clearCounterMoney()
emptyMoneyBox()
DispenserF53
createCode(byte[])
setFreeDevice()
sendMessage(byte[])
openConnection()
Config_inicial()
Mechal_Reset()
Cancel()
SensorLevelInformation()
CheckConfig()
search(byte[], byte[]): int
match(byte[], byte[], int): bool
getPositions(byte[], byte[]): byte[]
DispenserCBT
getDeviceId(): bool
enableContainerCoin(byte)
getNumberSerie(byte)
checkStatusSensors()
WhiteLED
LEDOn()
LEDOff()
BlueLED
LEDOn()
LEDOff()
CCTALK
CCTalk()
CCTalk GetInstance()
GetNameDevice(): string
openConnection(string): SerialPort
setMessage(byte[])
getMessage()
CleanEcho()
Cancel()
search(byte[], byte[]): int
match(byte[], byte[], int): bool
ByteArrayToString(byte[]): string
setChecksum(byte[], byte[]): byte[]
getIdDevice(): bool
sendMessage(byte[], byte[])

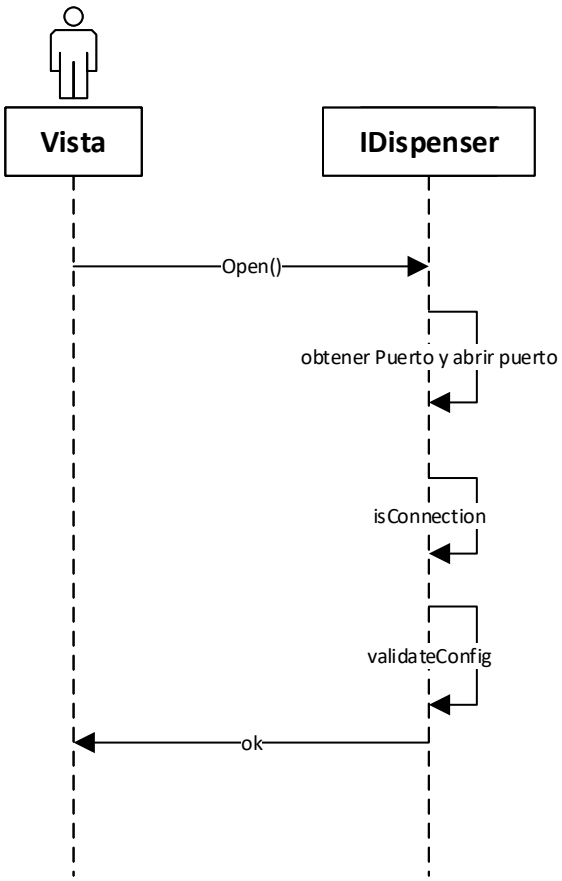
Vista
IDispenser
Open()
obtener Puerto y abrir puerto
isConnection
validateConfig
ok