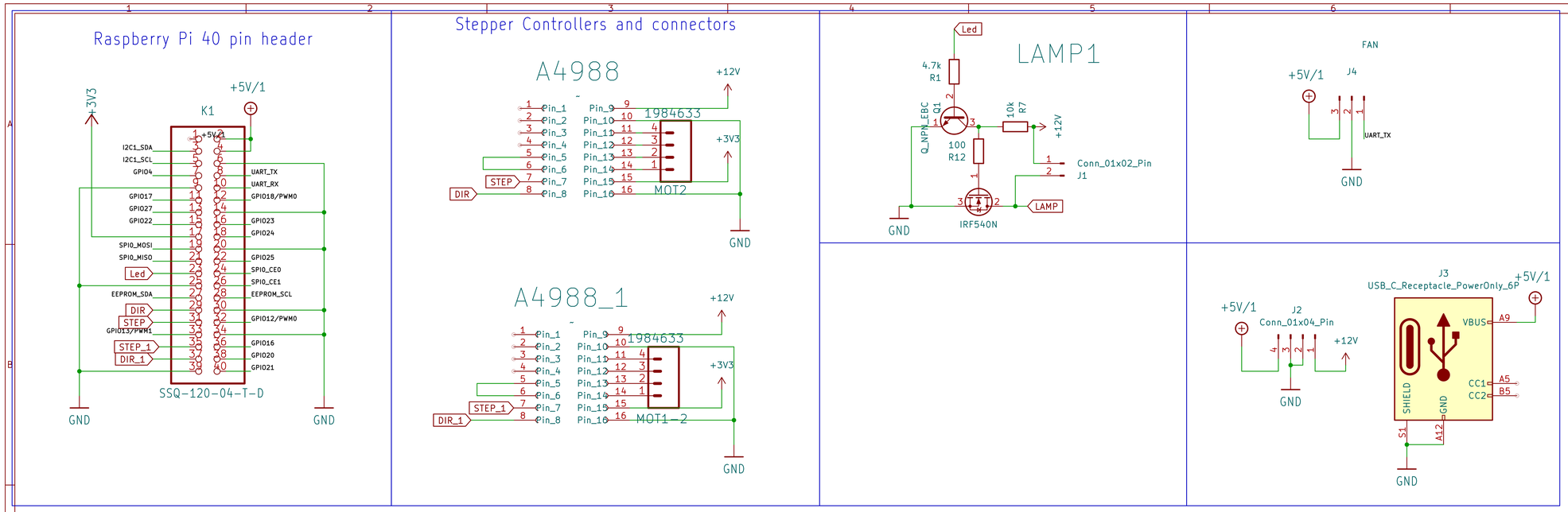

Sheet: /
Plankton Planet
File: Planktoscope-Hat.kicad_sch

v0.2

Title:

Size: User	Date:	**Rev:**
KiCad E.D.A. 9.0.6		Id: 1/1