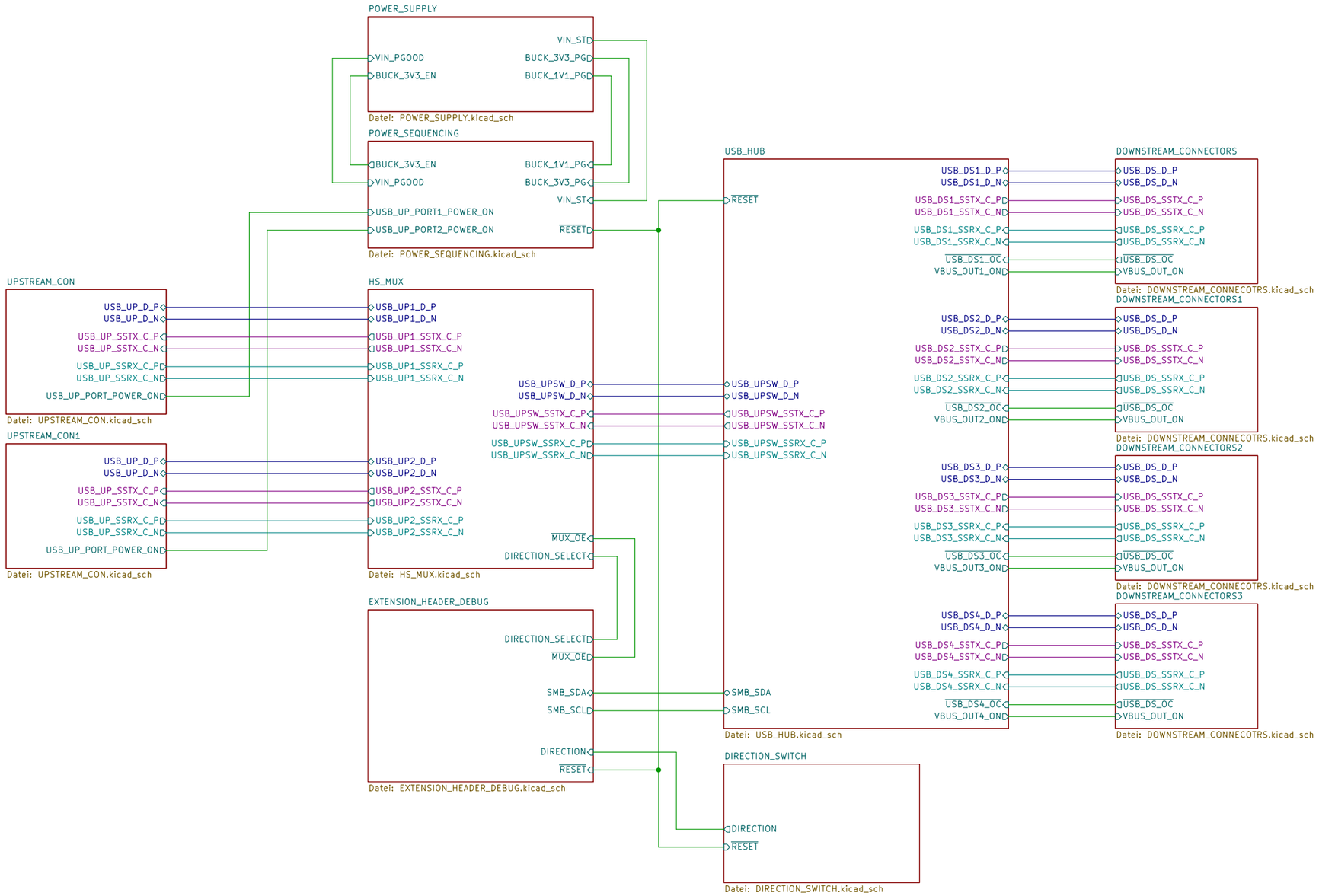

Sheet: /
File: USB_3_SWITCHER.kicad_sch

Title: USB 3.1 switcher

Size: A3	Date: 2026-02-20	Rev: Rev 1
KiCad E.D.A. 10.0.0-rc1.1		Id: 1/13

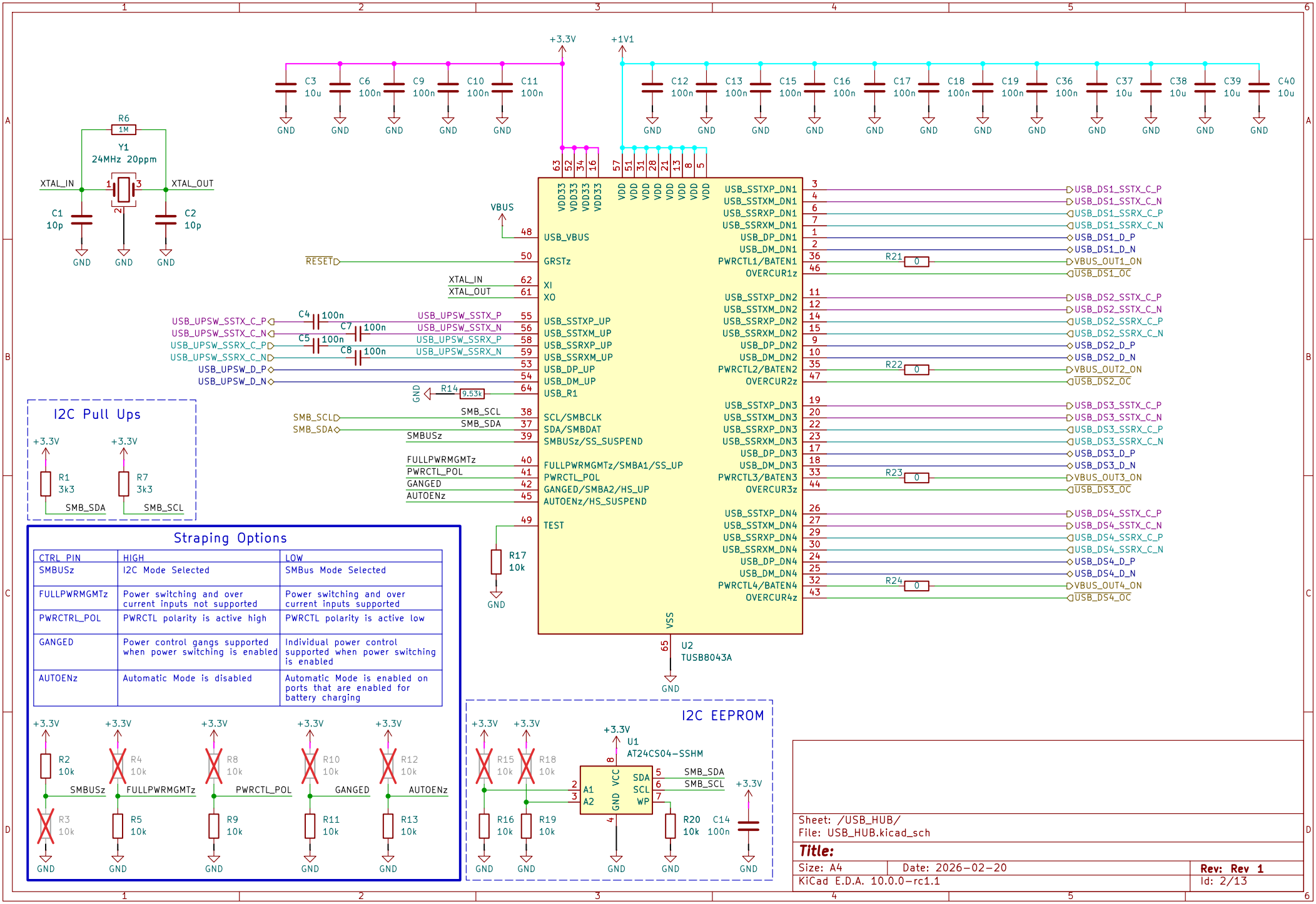
+3.3V
+1V1
C3 10u
C6 100n
C9 100n
C10 100n
C11 100n
C12 100n
C13 100n
C15 100n
C16 100n
C17 100n
C18 100n
C19 100n
C36 100n
C37 10u
C38 10u
C39 10u
C40 10u
GND
R6 1M
Y1 24MHz 20ppm
XTAL_IN
XTAL_OUT
C1 10p
C2 10p
VBUS
RESET
USB_VBUS
GRSTz
XI
XO
USB_UPSW_SSTX_C_P
USB_UPSW_SSTX_C_N
USB_UPSW_SSRX_C_P
USB_UPSW_SSRX_C_N
USB_UPSW_D_P
USB_UPSW_D_N
C4 100n
C5 100n
C7 100n
C8 100n
R14 9.53k
USB_R1
SMB_SCL
SMB_SDA
SMBUSz
FULLPWRMGMTz
PWRCTL_POL
GANGED
AUTOENz
TEST
R17 10k
VSS
U2
TUSB8043A
USB_SSTXP_DN1
USB_SSTXM_DN1
USB_SSRXP_DN1
USB_SSRXM_DN1
USB_DP_DN1
USB_DM_DN1
PWRCTL1/BATEN1
OVERCUR1z
USB_SSTXP_DN2
USB_SSTXM_DN2
USB_SSRXP_DN2
USB_SSRXM_DN2
USB_DP_DN2
USB_DM_DN2
PWRCTL2/BATEN2
OVERCUR2z
USB_SSTXP_DN3
USB_SSTXM_DN3
USB_SSRXP_DN3
USB_SSRXM_DN3
USB_DP_DN3
USB_DM_DN3
PWRCTL3/BATEN3
OVERCUR3z
USB_SSTXP_DN4
USB_SSTXM_DN4
USB_SSRXP_DN4
USB_SSRXM_DN4
USB_DP_DN4
USB_DM_DN4
PWRCTL4/BATEN4
OVERCUR4z
USB_DS1_SSTX_C_P
USB_DS1_SSTX_C_N
USB_DS1_SSRX_C_P
USB_DS1_SSRX_C_N
USB_DS1_D_P
USB_DS1_D_N
VBUS_OUT1_ON
USB_DS1_OC
USB_DS2_SSTX_C_P
USB_DS2_SSTX_C_N
USB_DS2_SSRX_C_P
USB_DS2_SSRX_C_N
USB_DS2_D_P
USB_DS2_D_N
VBUS_OUT2_ON
USB_DS2_OC
USB_DS3_SSTX_C_P
USB_DS3_SSTX_C_N
USB_DS3_SSRX_C_P
USB_DS3_SSRX_C_N
USB_DS3_D_P
USB_DS3_D_N
VBUS_OUT3_ON
USB_DS3_OC
USB_DS4_SSTX_C_P
USB_DS4_SSTX_C_N
USB_DS4_SSRX_C_P
USB_DS4_SSRX_C_N
USB_DS4_D_P
USB_DS4_D_N
VBUS_OUT4_ON
USB_DS4_OC
R21 0
R22 0
R23 0
R24 0
I2C Pull Ups
R1 3k3
R7 3k3
Straping Options
CTRL_PIN | HIGH | LOW
SMBUSz | I2C Mode Selected | SMBus Mode Selected
FULLPWRMGMTz | Power switching and over current inputs not supported | Power switching and over current inputs supported
PWRCTRL_POL | PWRCTL polarity is active high | PWRCTL polarity is active low
GANGED | Power control gangs supported when power switching is enabled | Individual power control supported when power switching is enabled
AUTOENz | Automatic Mode is disabled | Automatic Mode is enabled on ports that are enabled for battery charging
R2 10k
R4 10k
R8 10k
R10 10k
R12 10k
R3 10k
R5 10k
R9 10k
R11 10k
R13 10k
I2C EEPROM
U1
AT24CS04-SSHM
R15 10k
R18 10k
R16 10k
R19 10k
R20 10k
C14 100n
Sheet: /USB_HUB/
File: USB_HUB.kicad_sch
Title:
Size: A4
Date: 2026-02-20
Rev: Rev 1
KiCad E.D.A. 10.0.0-rc1.1
Id: 2/13

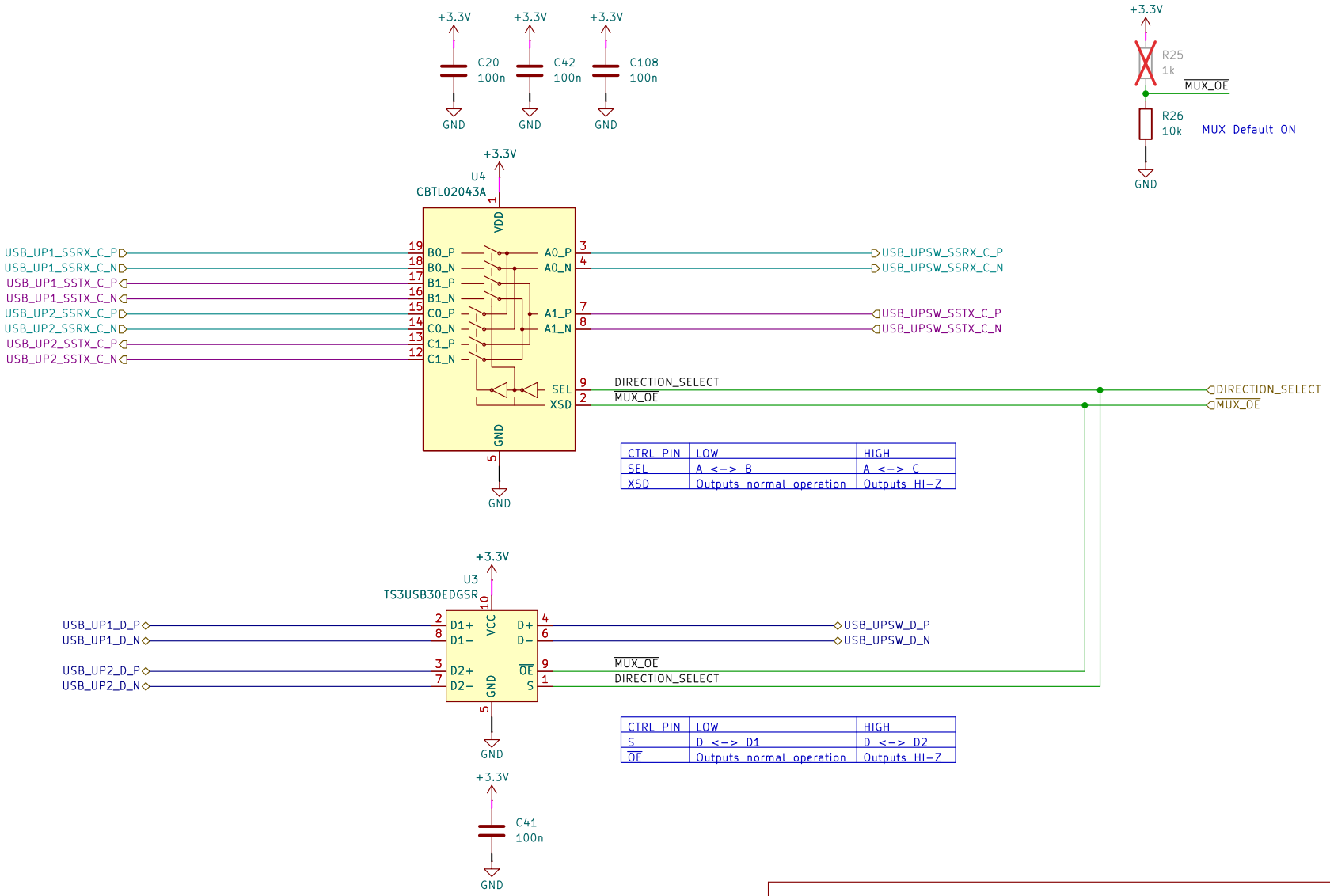

CTRL PIN	LOW	HIGH
SEL	A <-> B	A <-> C
XSD	Outputs normal operation	Outputs HI-Z

CTRL PIN	LOW	HIGH
S	D <-> D1	D <-> D2
$\overline{OE}$	Outputs normal operation	Outputs HI-Z

Sheet: /HS_MUX/
File: HS_MUX.kicad_sch

Title:

Size: A4	Date: 2026-02-20	Rev: Rev 1
KiCad E.D.A. 10.0.0-rc1.1		Id: 3/13

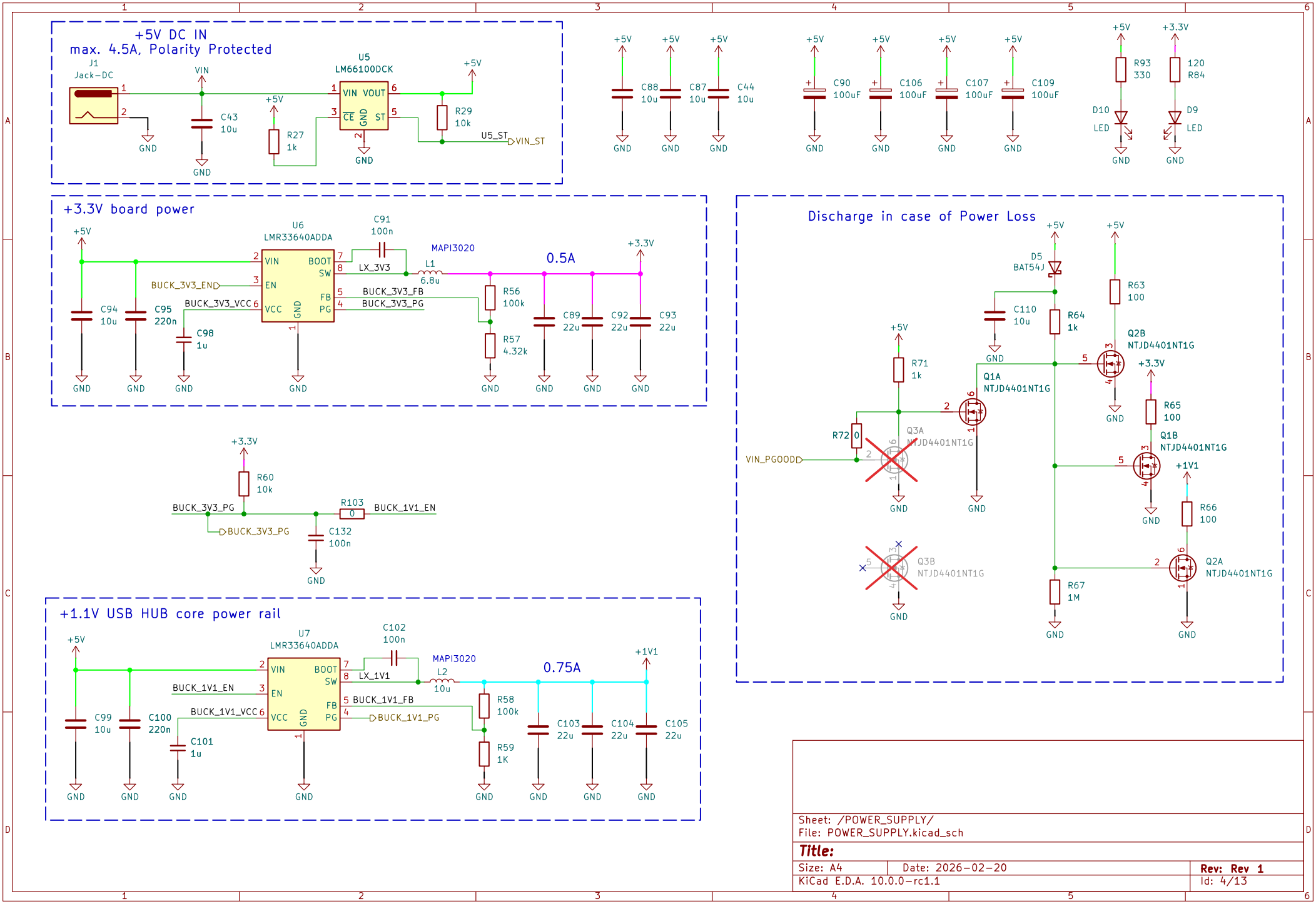

Sheet: /POWER_SUPPLY/
File: POWER_SUPPLY.kicad_sch

Title:

Size: A4	Date: 2026-02-20	Rev: Rev 1
KiCad E.D.A. 10.0.0-rc1.1		Id: 4/13

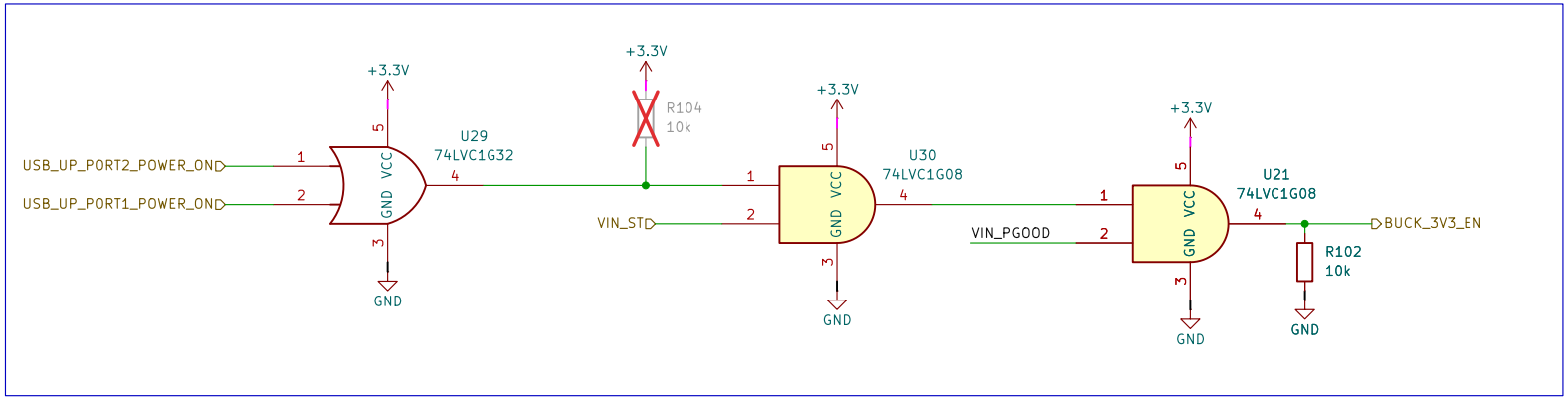

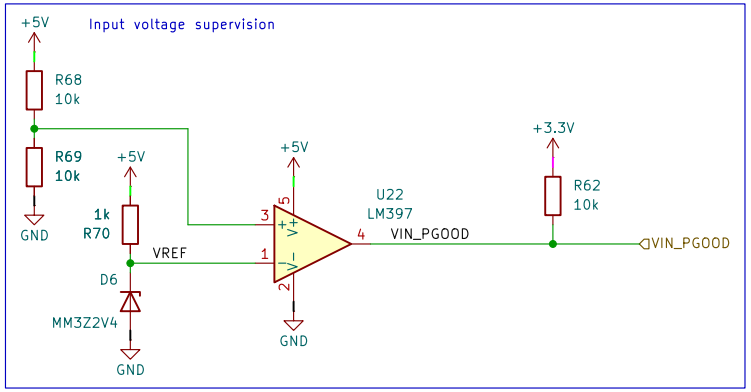

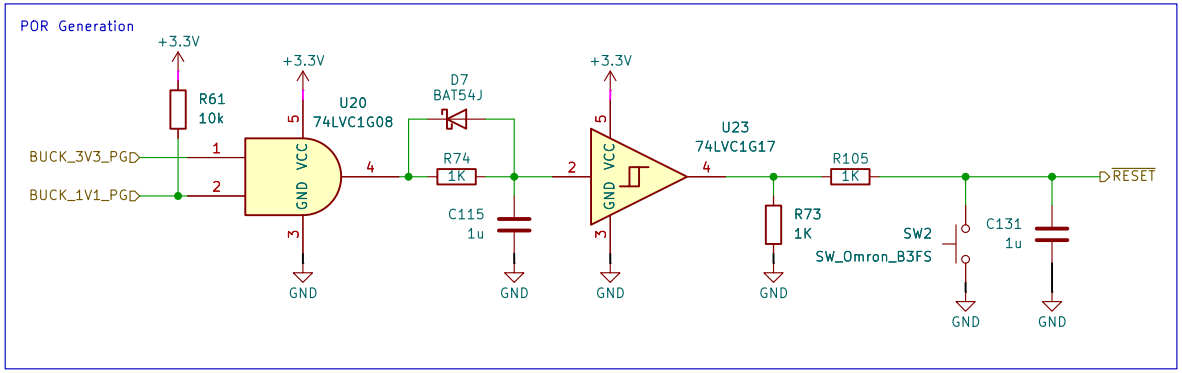

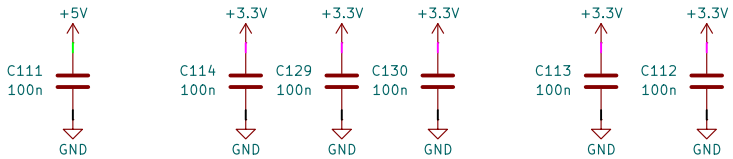

Sheet: /POWER_SEQUENCING/
File: POWER_SEQUENCING.kicad_sch

Title:

Size: A4	Date:	Rev:
KiCad E.D.A. 10.0.0-rc1.1		Id: 5/13

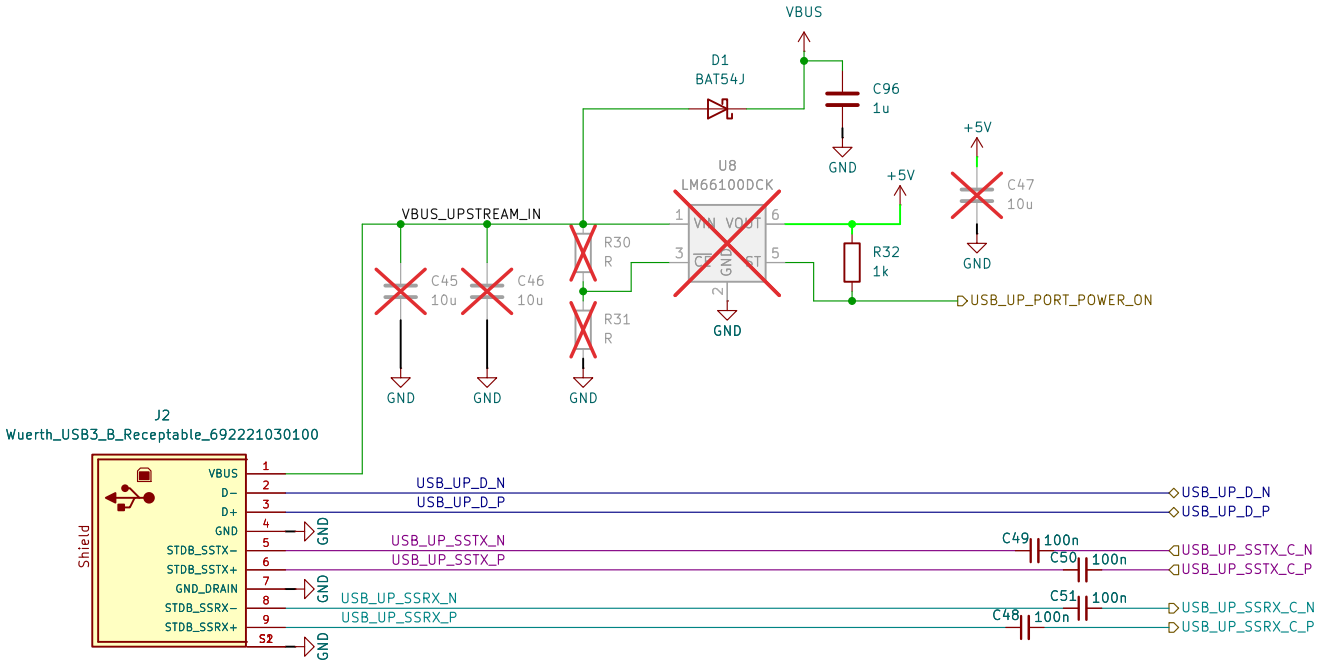

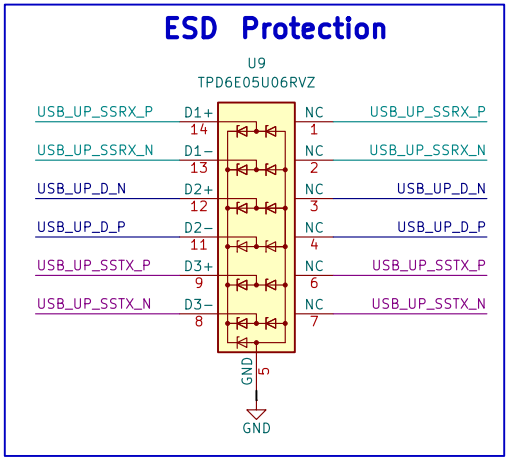

Sheet: /UPSTREAM_CON/
File: UPSTREAM_CON.kicad_sch

Title:

Size: A4	Date: 2026-02-20	Rev: Rev 1
KiCad E.D.A. 10.0.0-rc1.1		Id: 6/13

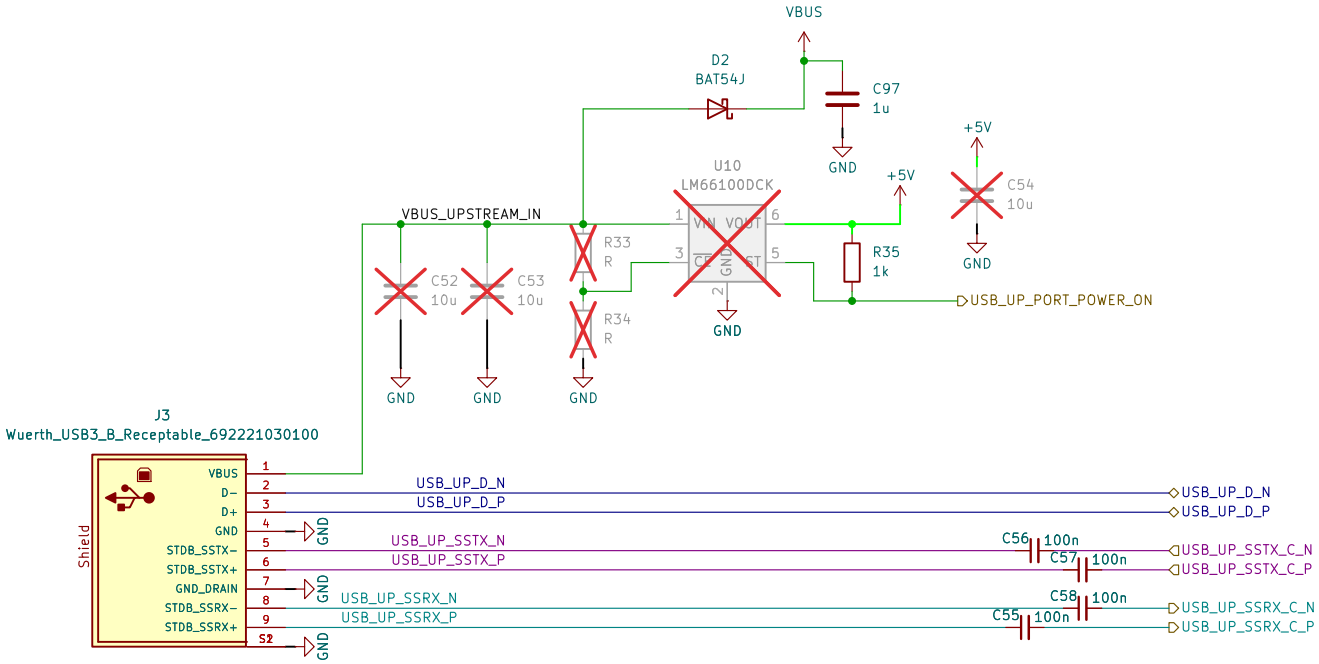

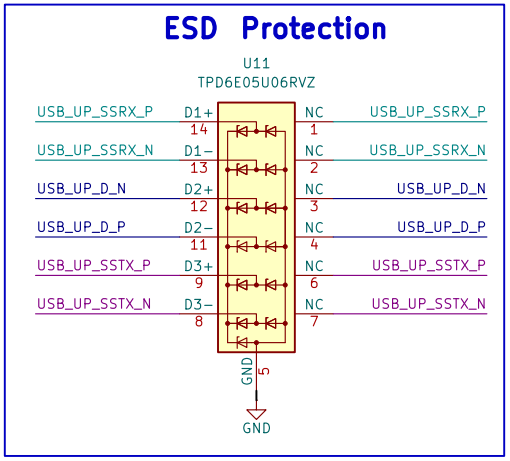

Sheet: /UPSTREAM_CON1/
File: UPSTREAM_CON.kicad_sch

Title:

Size: A4	Date: 2026-02-20	Rev: Rev 1
KiCad E.D.A. 10.0.0-rc1.1		Id: 7/13

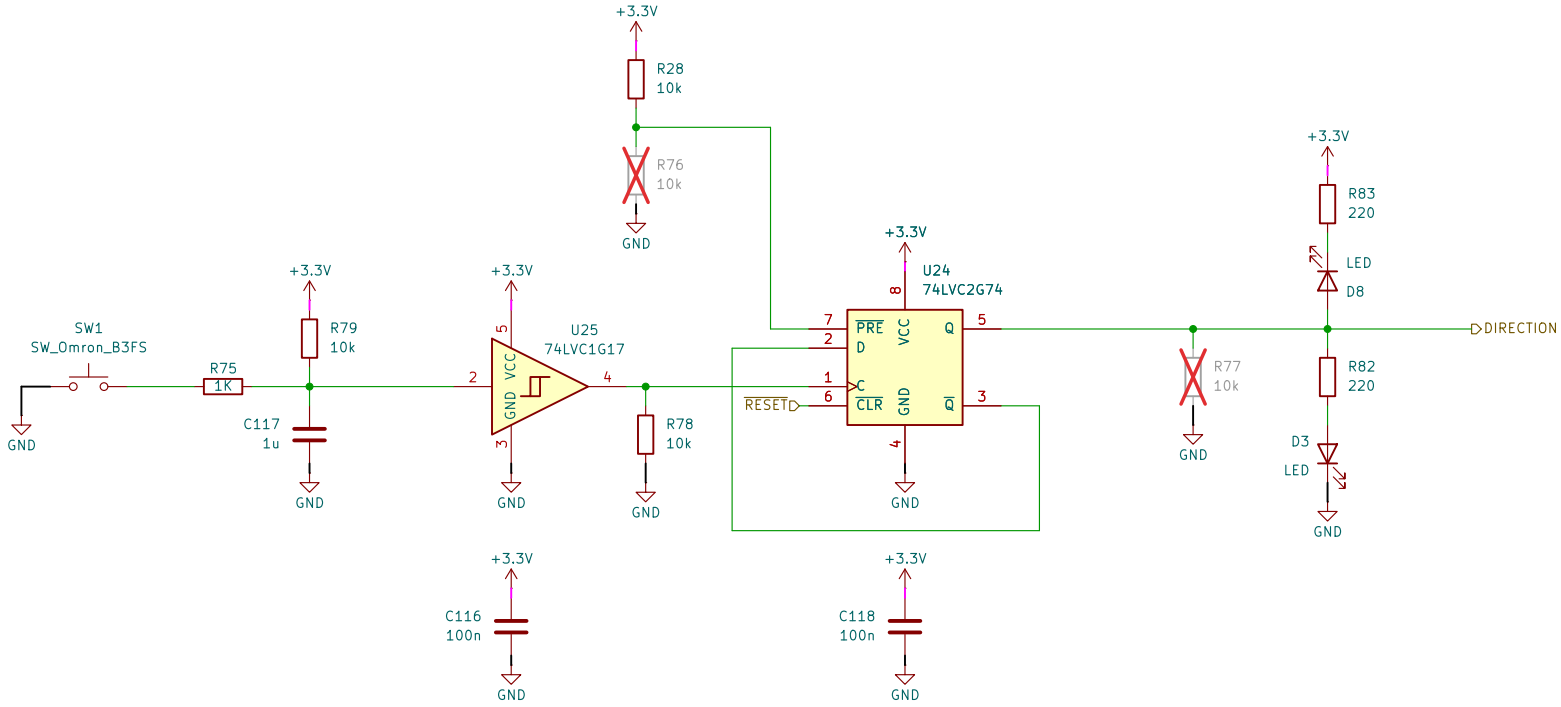

Sheet: /DIRECTION_SWITCH/
File: DIRECTION_SWITCH.kicad_sch

Title:

Size: A4	Date: 2026-02-20	**Rev: Rev 1**
KiCad E.D.A. 10.0.0-rc1.1		Id: 8/13

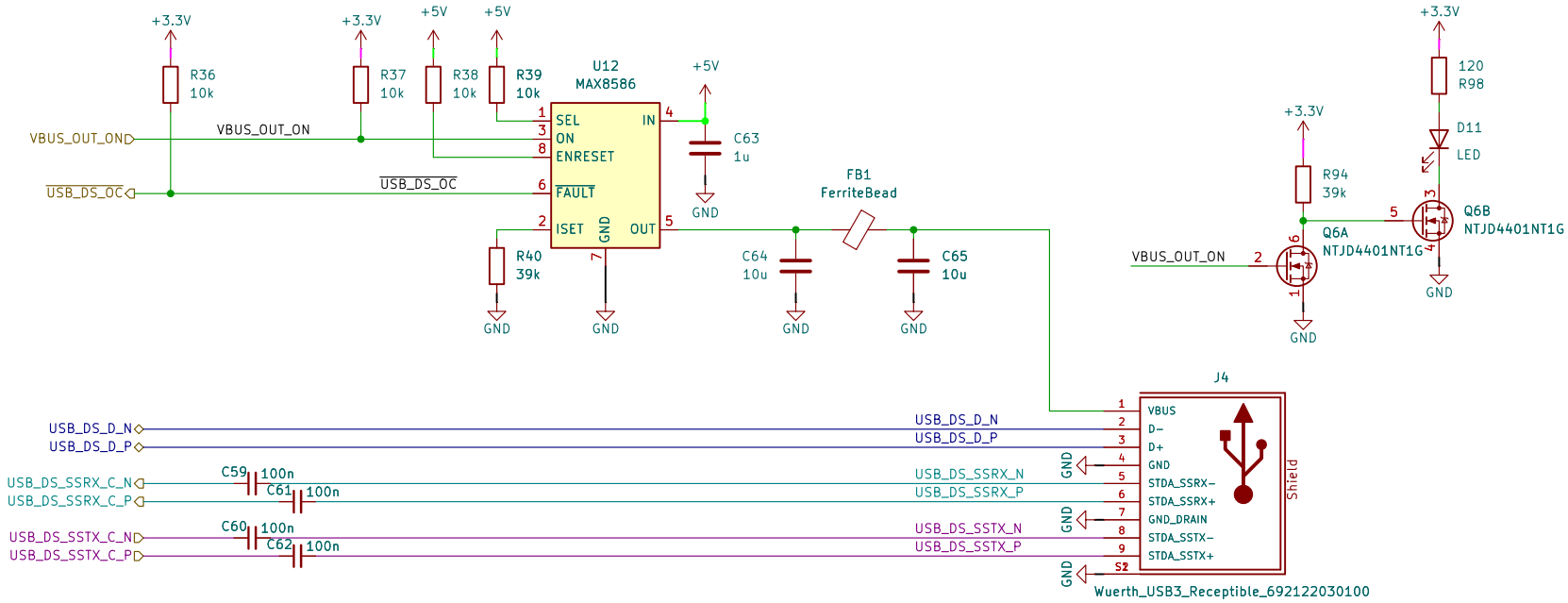

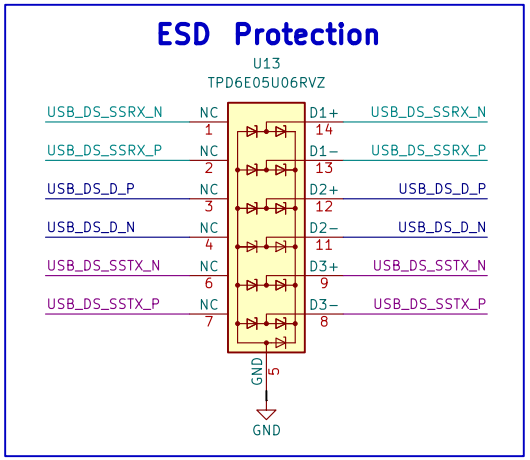

Sheet: /DOWNSTREAM_CONNECTORS/
File: DOWNSTREAM_CONNECOTRS.kicad_sch

Title:

Size: A4	Date: 2026-02-20	Rev: Rev 1
KiCad E.D.A. 10.0.0-rc1.1		Id: 9/13

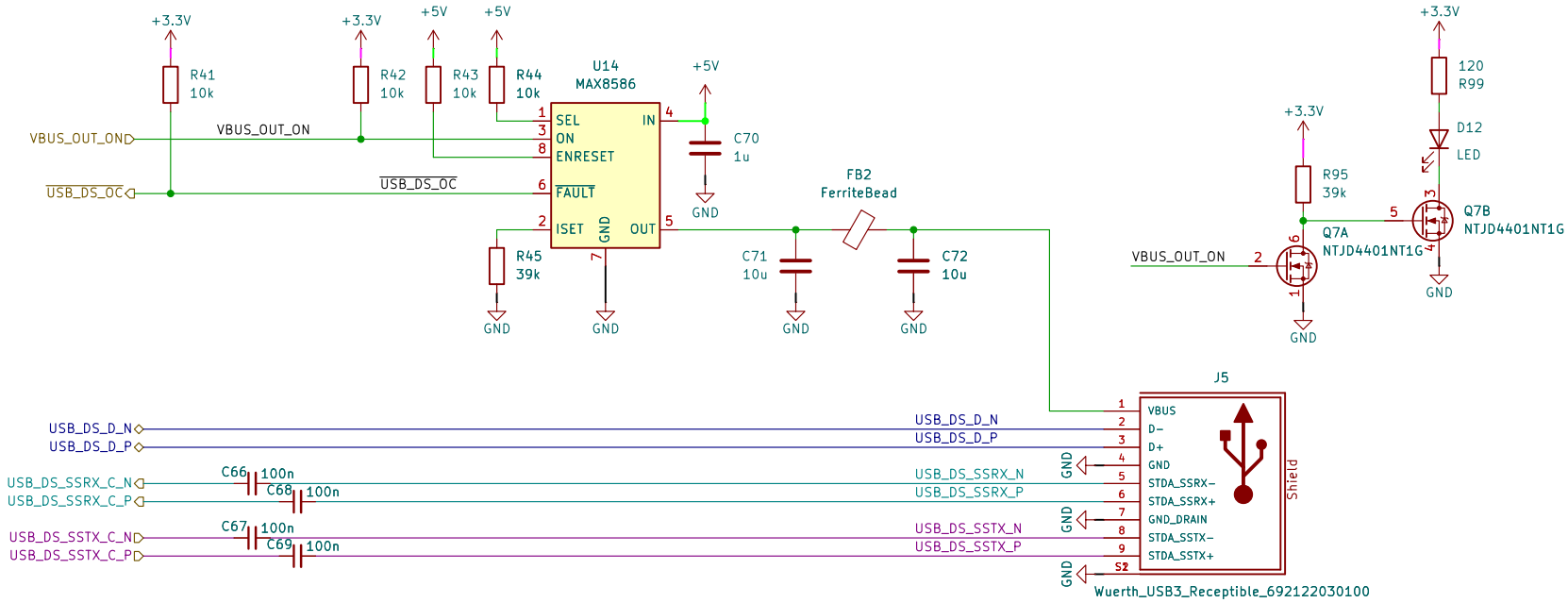

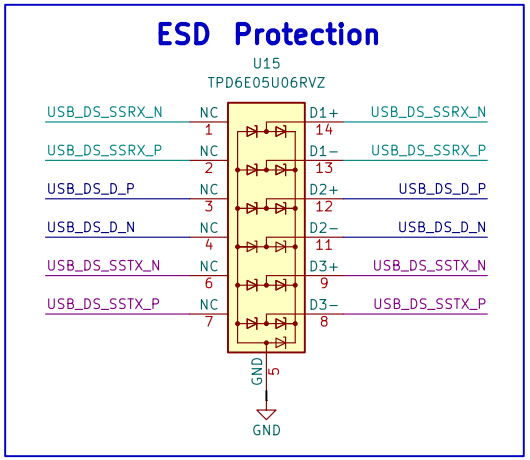

Sheet: /DOWNSTREAM_CONNECTORS1/
File: DOWNSTREAM_CONNECOTRS.kicad_sch

Title:

Size: A4	Date: 2026-02-20	Rev: Rev 1
KiCad E.D.A. 10.0.0-rc1.1		Id: 10/13

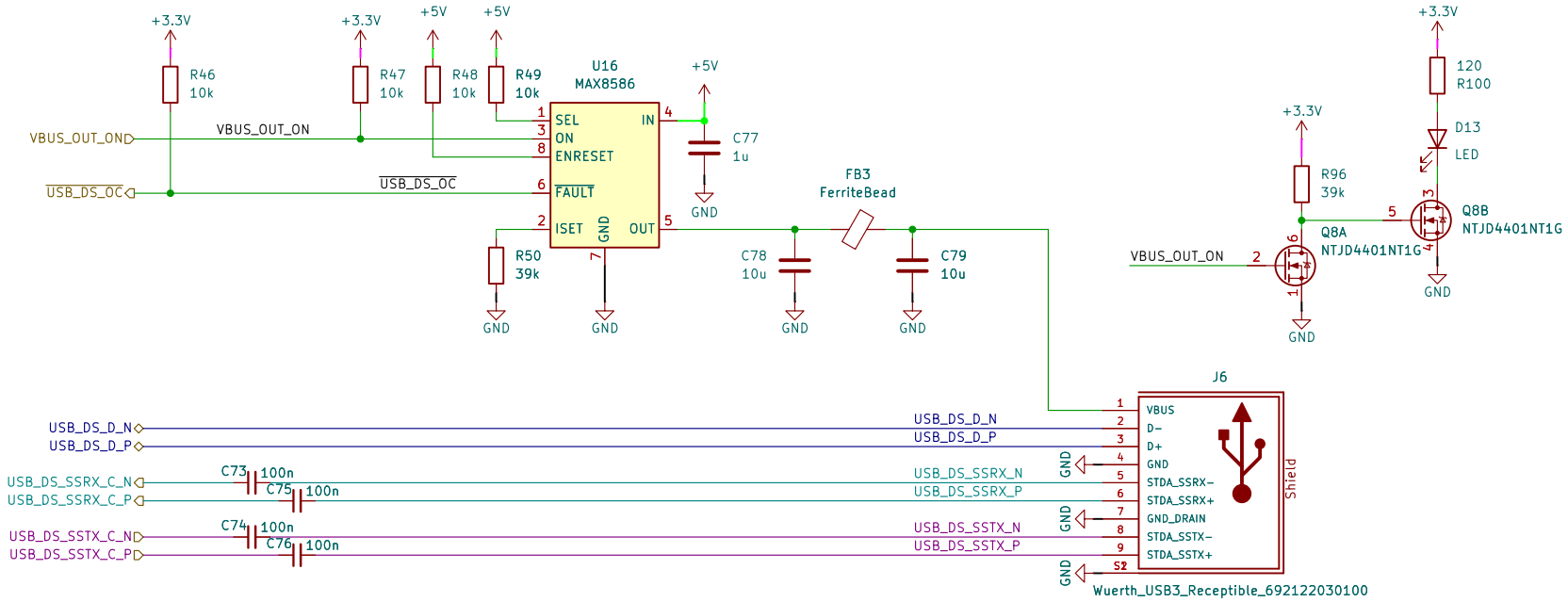

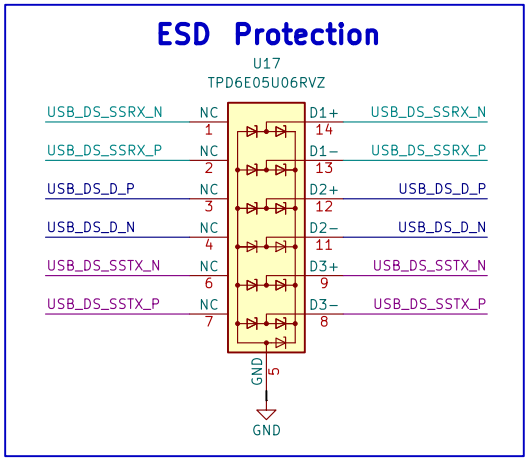

Sheet: /DOWNSTREAM_CONNECTORS2/
File: DOWNSTREAM_CONNECOTRS.kicad_sch

Title:

Size: A4	Date: 2026-02-20	Rev: Rev 1
KiCad E.D.A. 10.0.0-rc1.1		Id: 11/13

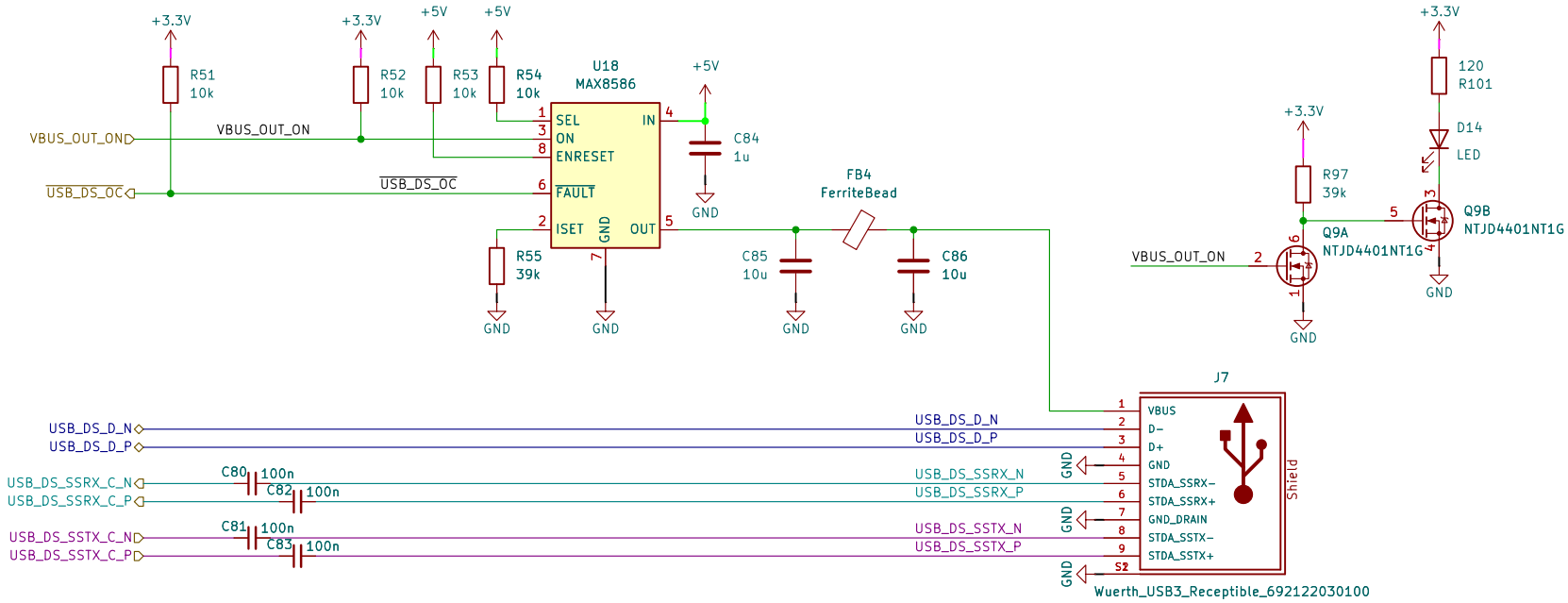

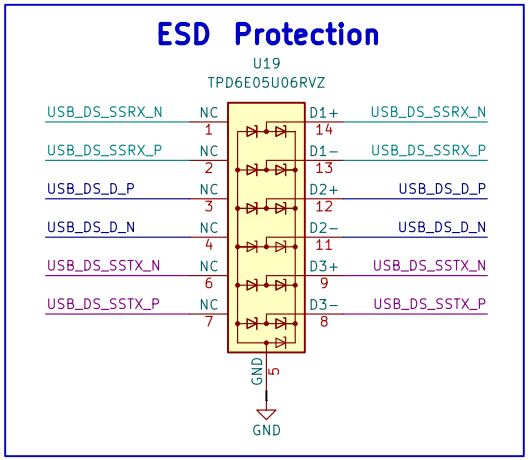

Sheet: /DOWNSTREAM_CONNECTORS3/
File: DOWNSTREAM_CONNECOTRS.kicad_sch

Title:

Size: A4	Date: 2026-02-20	Rev: Rev 1
KiCad E.D.A. 10.0.0-rc1.1		Id: 12/13

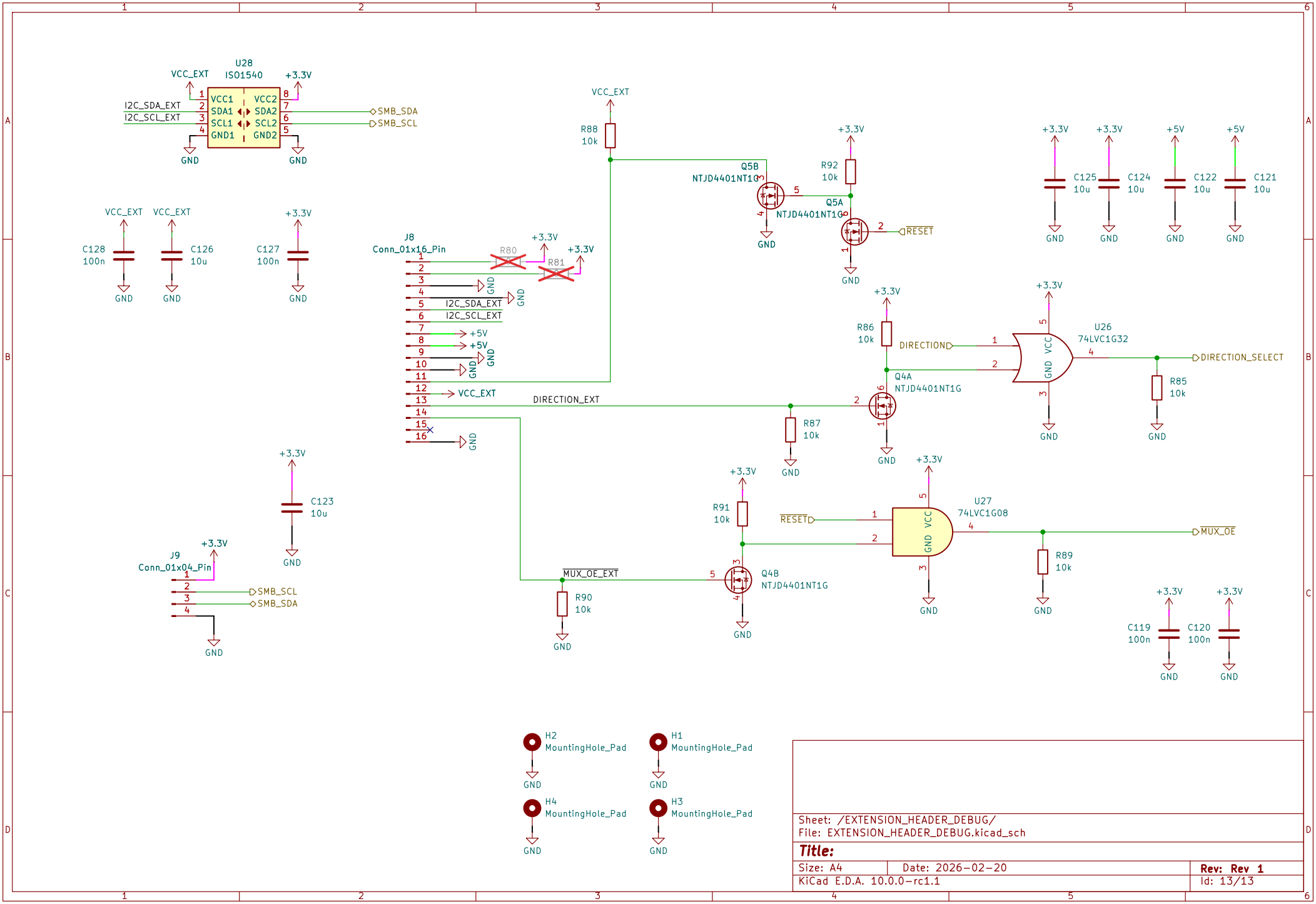

Sheet: /EXTENSION_HEADER_DEBUG/
File: EXTENSION_HEADER_DEBUG.kicad_sch

Title:

Size: A4	Date: 2026-02-20	Rev: Rev 1
KiCad E.D.A. 10.0.0-rc1.1		Id: 13/13