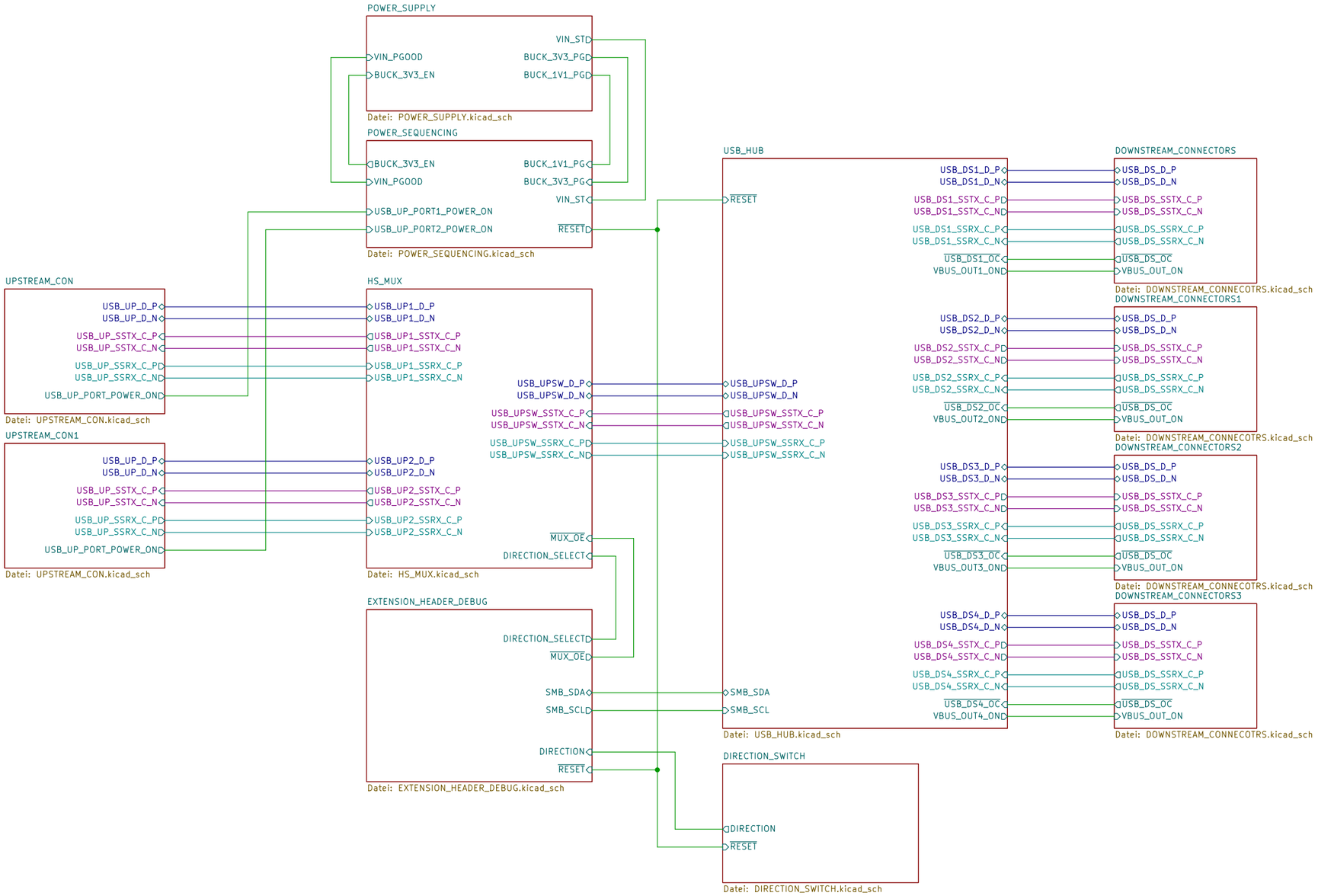

Sheet: /
File: USB_3_SWITCHER.kicad_sch

Title: USB 3.1 switcher

Size: A3	Date: 2026-02-20	Rev: Rev 1
KiCad E.D.A. 10.0.0-rc2		Id: 1/13

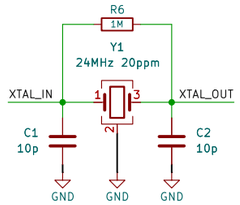

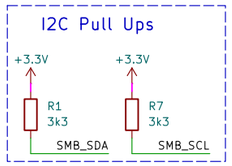

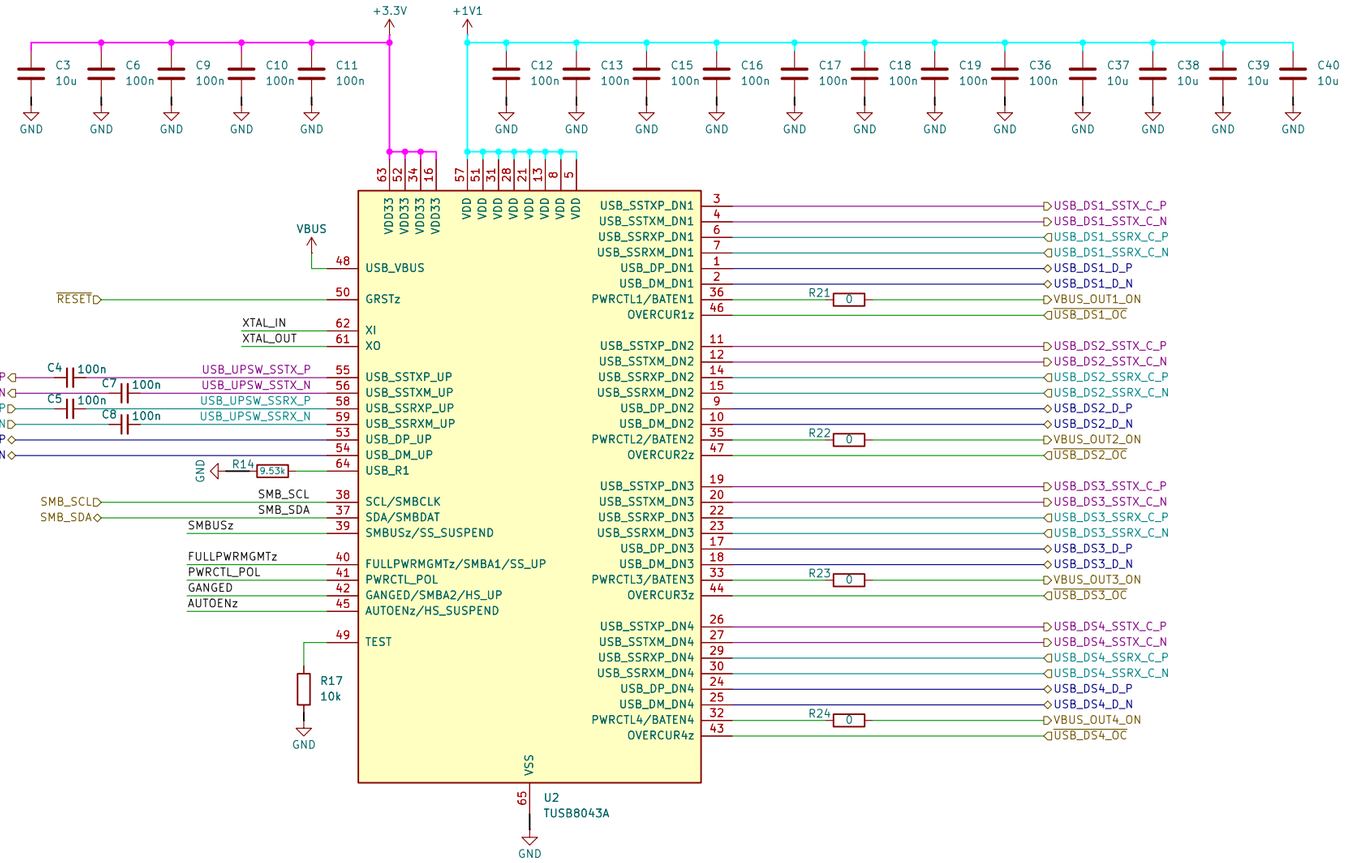

Straping Options

CTRL_PIN	HIGH	LOW
SMBUSz	I2C Mode Selected	SMBus Mode Selected
FULLPWRMGMTz	Power switching and over current inputs not supported	Power switching and over current inputs supported
PWRCTRL_POL	PWRCTL polarity is active high	PWRCTL polarity is active low
GANGED	Power control gangs supported when power switching is enabled	Individual power control supported when power switching is enabled
AUTOENz	Automatic Mode is disabled	Automatic Mode is enabled on ports that are enabled for battery charging

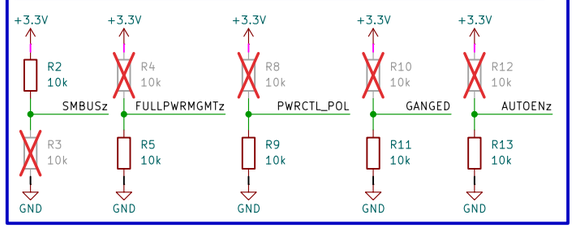

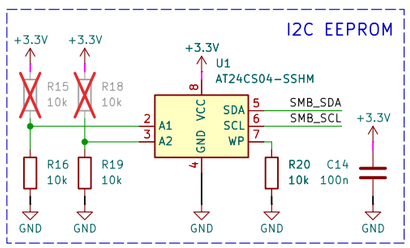

Sheet: /USB_HUB/
File: USB_HUB.kicad_sch

Title:

Size: A3	Date: 2026-02-20	Rev: Rev 1
KiCad E.D.A. 10.0.0-rc2		Id: 2/13

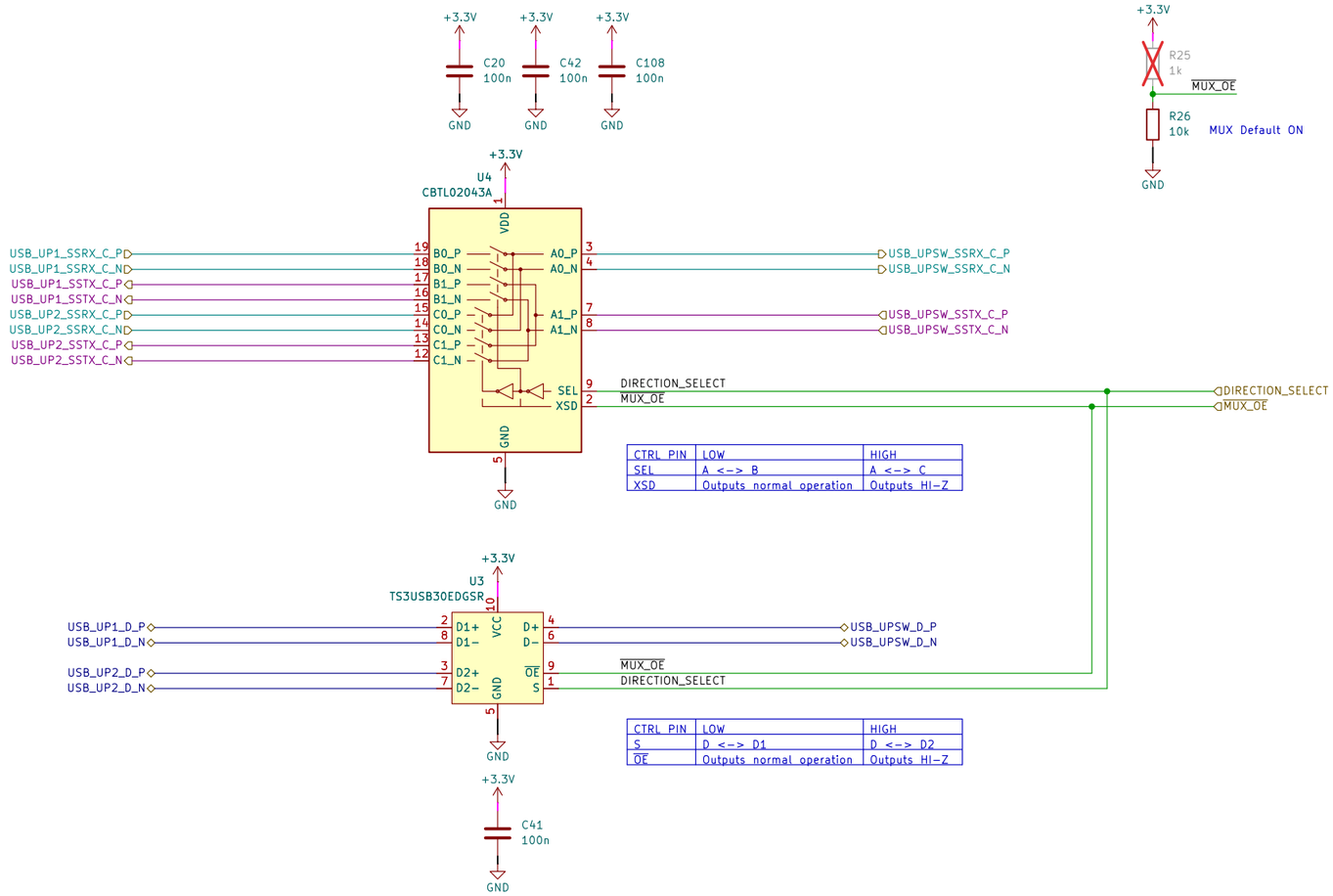

CTRL PIN	LOW	HIGH
SEL	A <-> B	A <-> C
XSD	Outputs normal operation	Outputs HI-Z

CTRL PIN	LOW	HIGH
S	D <-> D1	D <-> D2
$\overline{OE}$	Outputs normal operation	Outputs HI-Z

Sheet: /HS_MUX/
File: HS_MUX.kicad_sch

Title:

Size: A3	Date: 2026-02-20	Rev: Rev 1
KiCad E.D.A. 10.0.0-rc2		Id: 3/13

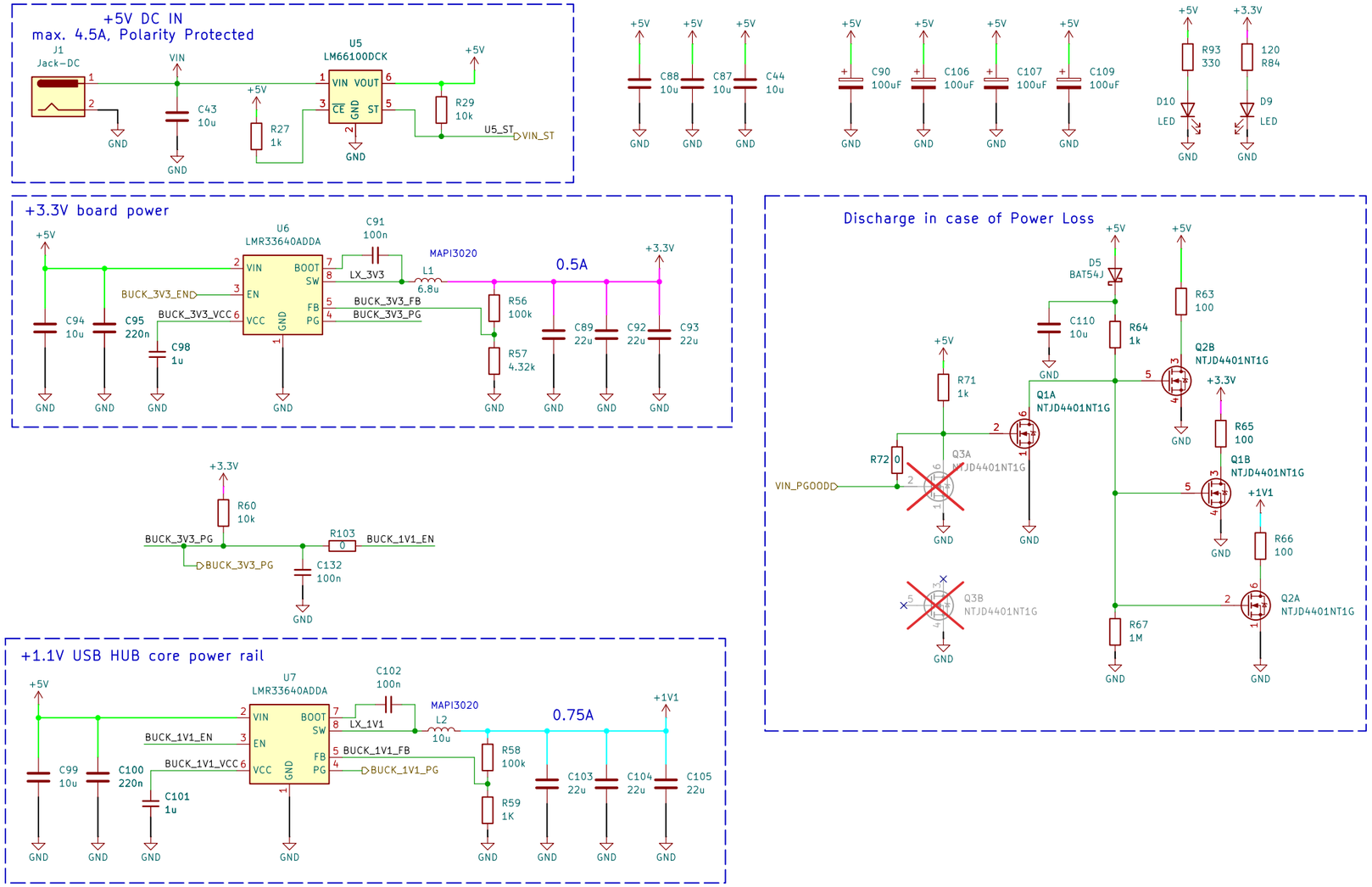

Sheet: /POWER_SUPPLY/
File: POWER_SUPPLY.kicad_sch

Title:

Size: A3	Date: 2026-02-20	Rev: Rev 1
KiCad E.D.A. 10.0.0-rc2		Id: 4/13

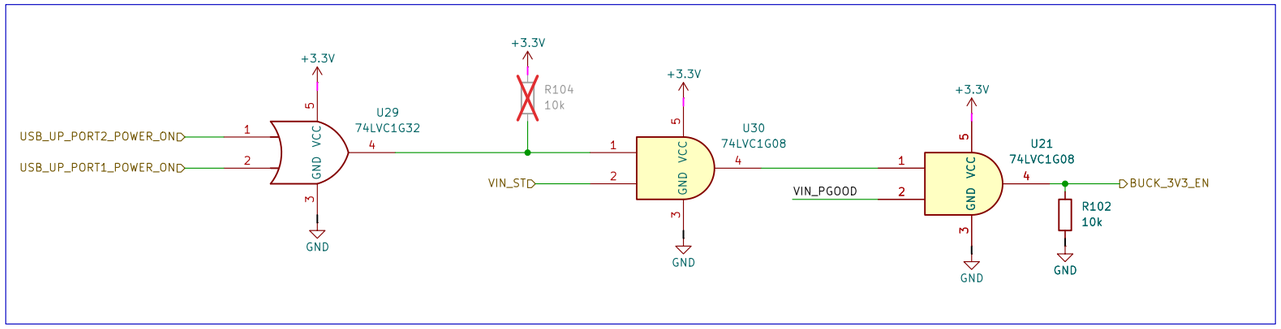

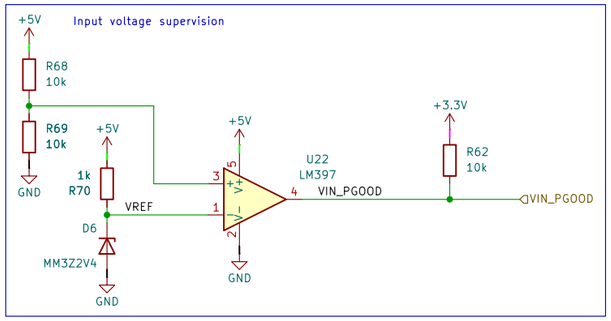

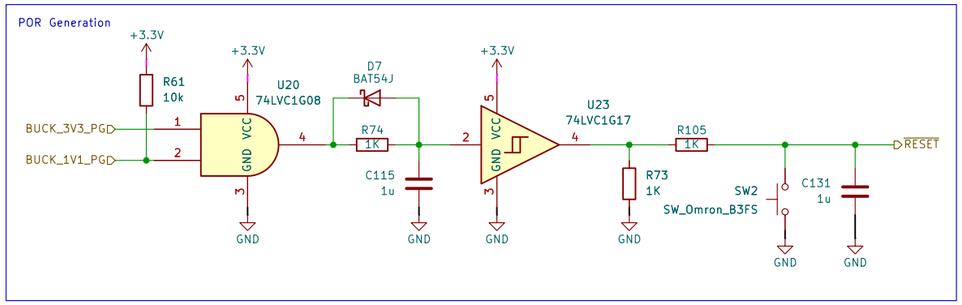

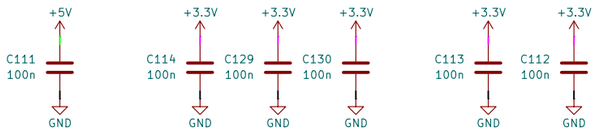

Sheet: /POWER_SEQUENCING/
File: POWER_SEQUENCING.kicad_sch

Title:

Size: A3	Date: 2026-02-20	Rev: Rev 1
KiCad E.D.A. 10.0.0-rc2		Id: 5/13

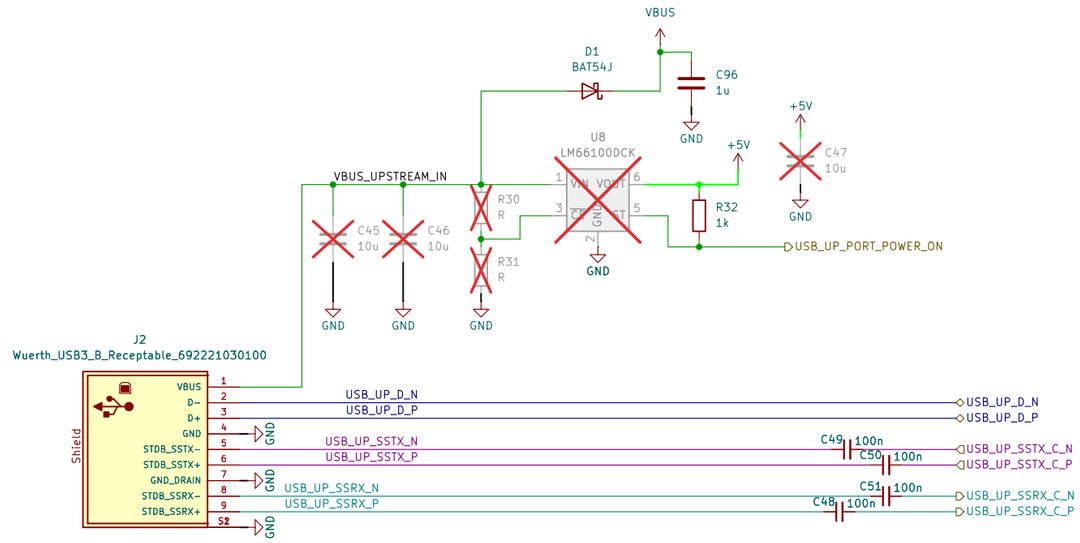

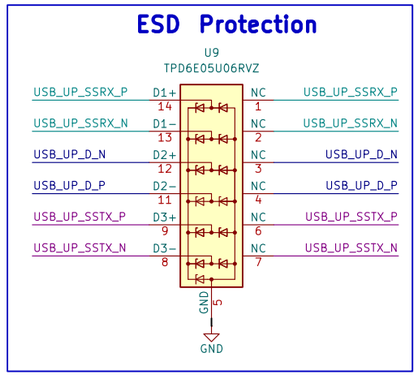

Sheet: /UPSTREAM_CON/
File: UPSTREAM_CON.kicad_sch

Title:

Size: A3	Date: 2026-02-20	Rev: Rev 1
KiCad E.D.A. 10.0.0-rc2		Id: 6/13

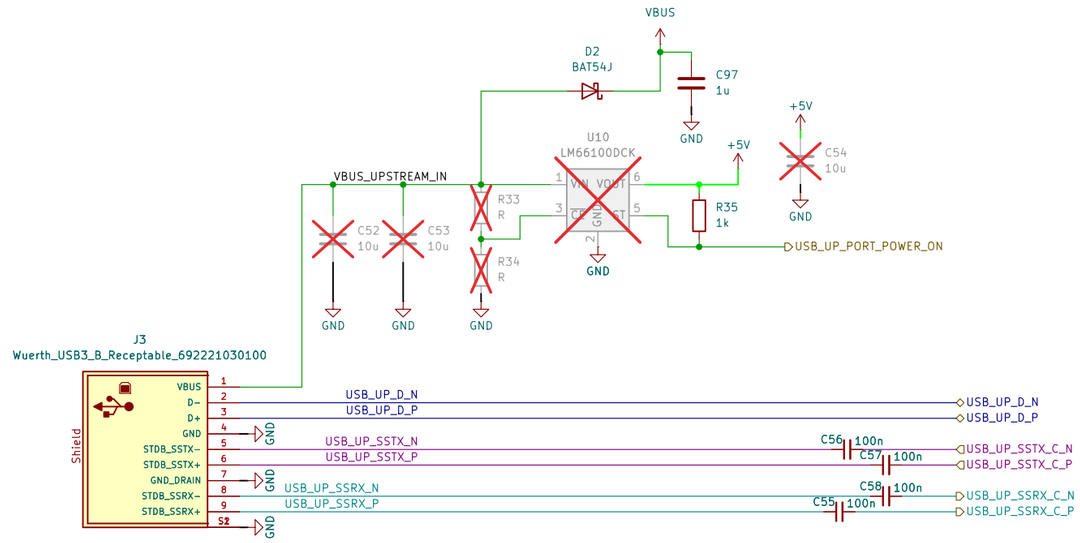

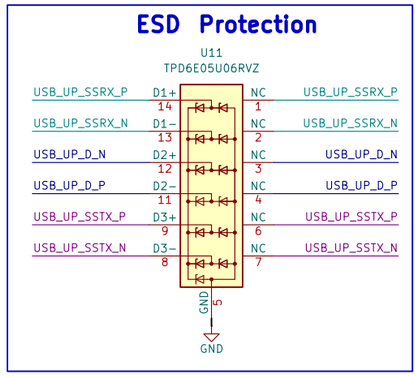

Sheet: /UPSTREAM_CON1/
File: UPSTREAM_CON.kicad_sch

Title:

Size: A3	Date: 2026-02-20	Rev: Rev 1
KiCad E.D.A. 10.0.0-rc2		Id: 7/13

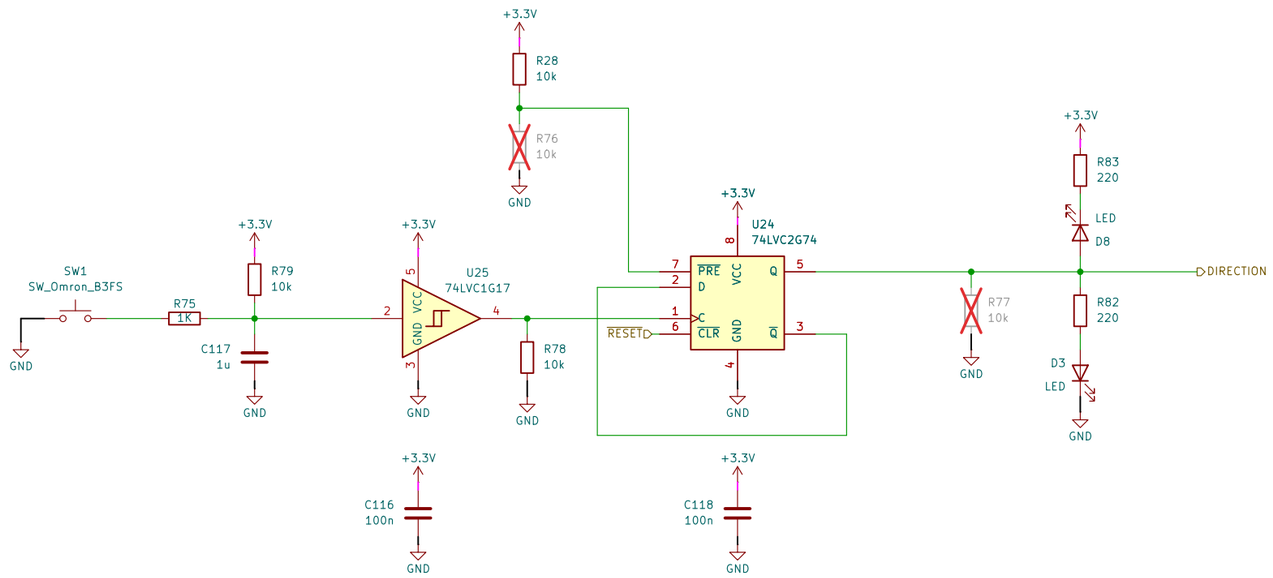

Sheet: /DIRECTION_SWITCH/
File: DIRECTION_SWITCH.kicad_sch

Title:

Size: A3	Date: 2026-02-20	Rev: Rev 1
KiCad E.D.A. 10.0.0-rc2		Id: 8/13

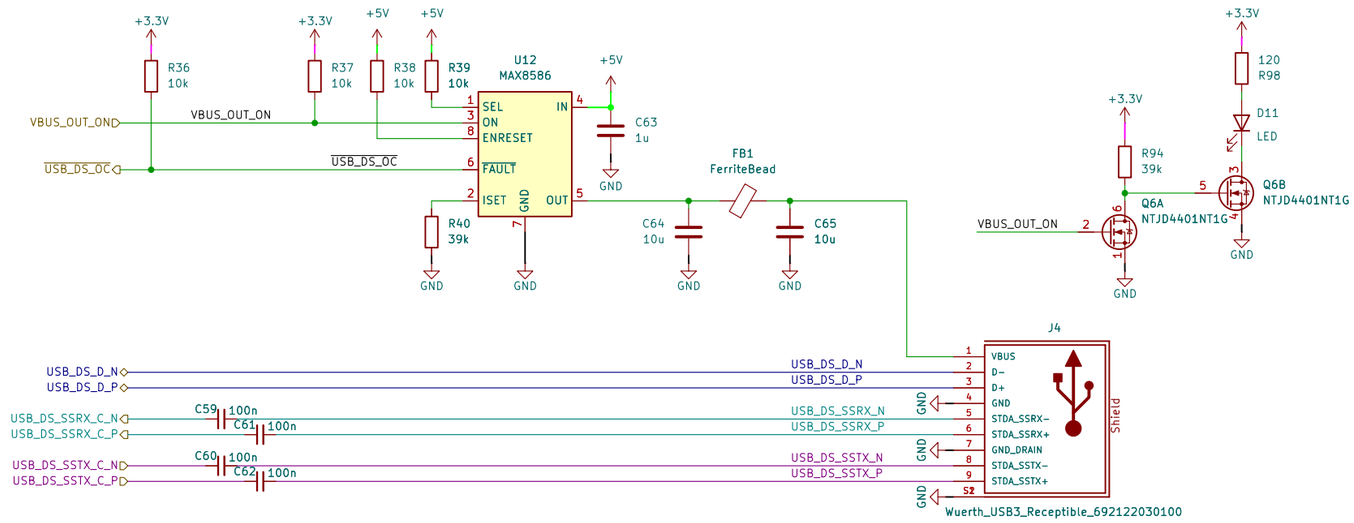

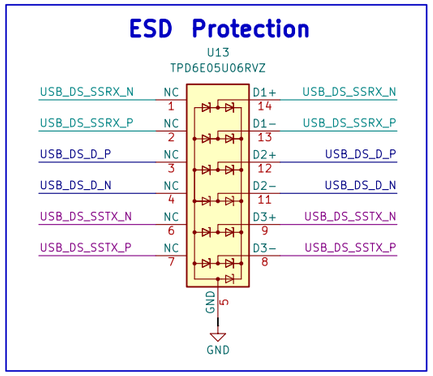

Sheet: /DOWNSTREAM_CONNECTORS/
File: DOWNSTREAM_CONNECOTRS.kicad_sch

Title:

Size: A3	Date: 2026-02-20	Rev: Rev 1
KiCad E.D.A. 10.0.0-rc2		Id: 9/13

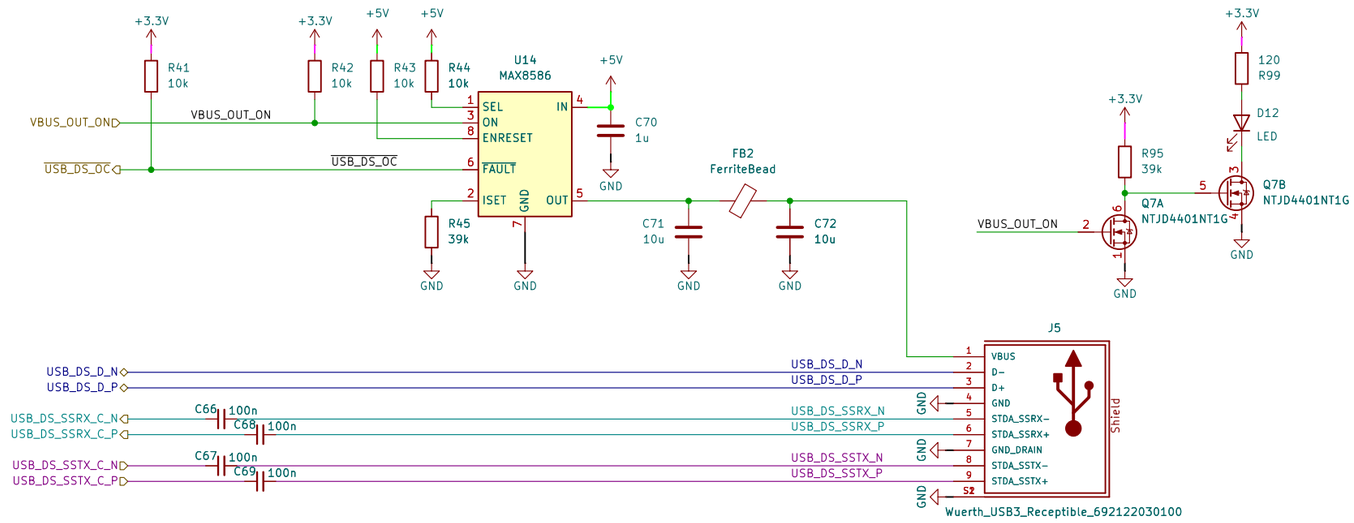

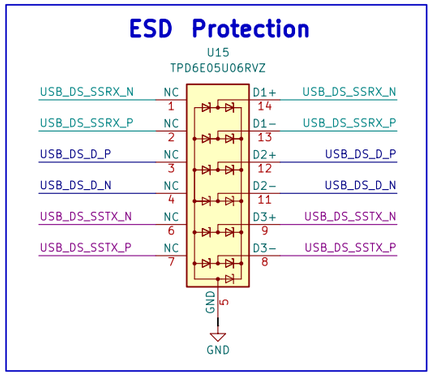

Sheet: /DOWNSTREAM_CONNECTORS1/
File: DOWNSTREAM_CONNECOTRS.kicad_sch

Title:

Size: A3	Date: 2026-02-20	Rev: Rev 1
KiCad E.D.A. 10.0.0-rc2		Id: 10/13

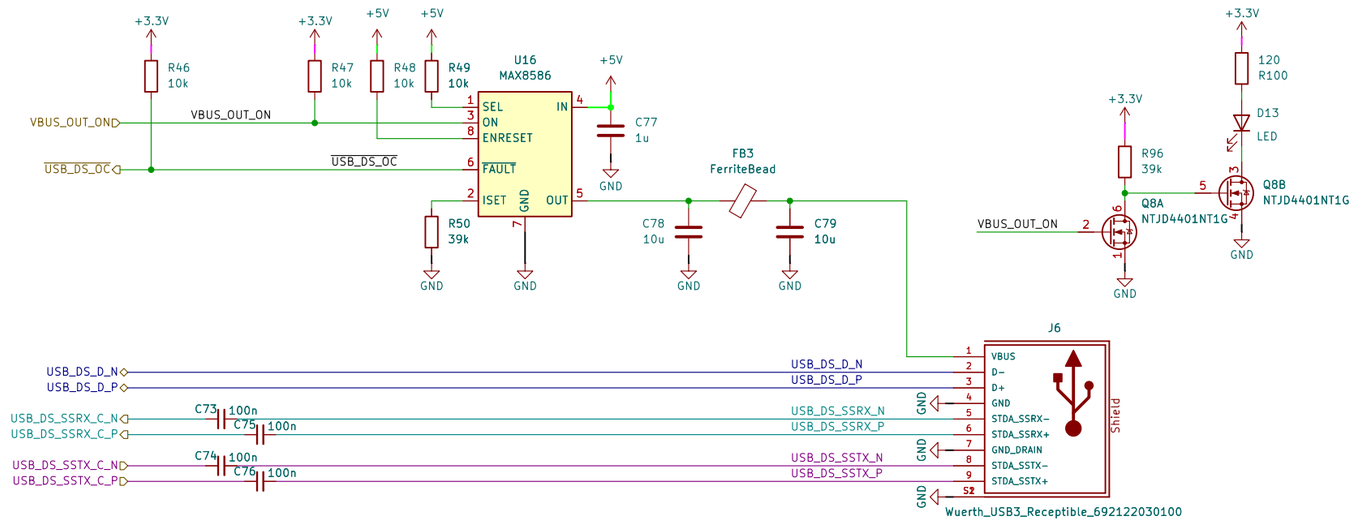

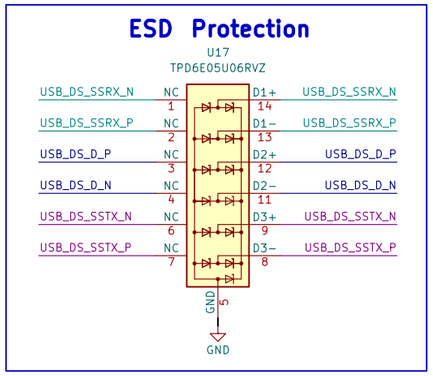

Sheet: /DOWNSTREAM_CONNECTORS2/
File: DOWNSTREAM_CONNECOTRS.kicad_sch

Title:

Size: A3	Date: 2026-02-20	Rev: Rev 1
KiCad E.D.A. 10.0.0-rc2		Id: 11/13

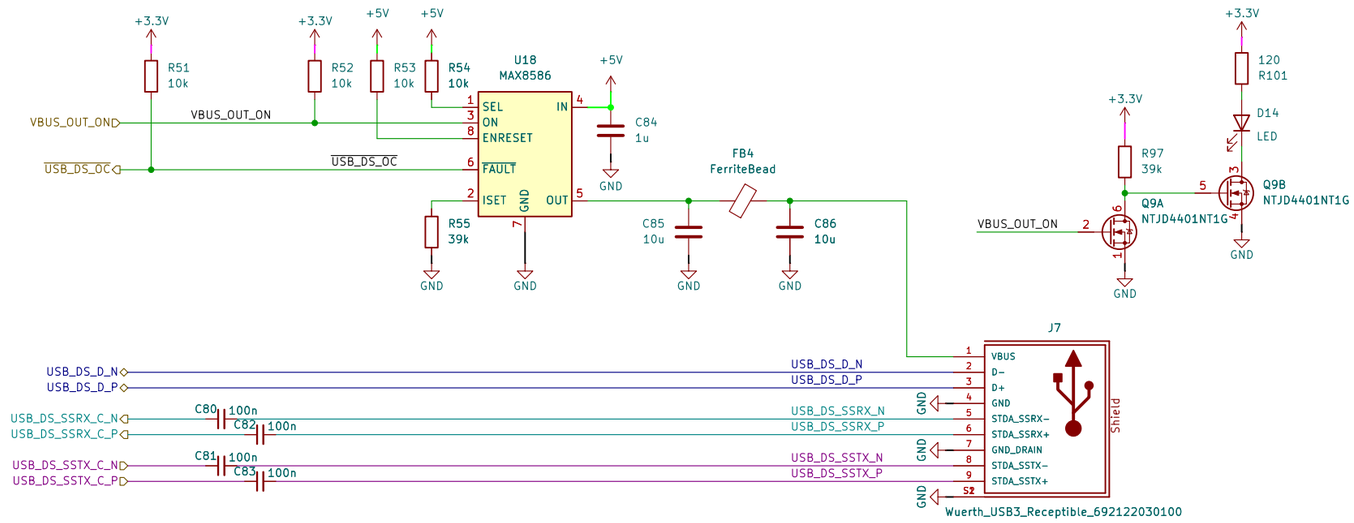

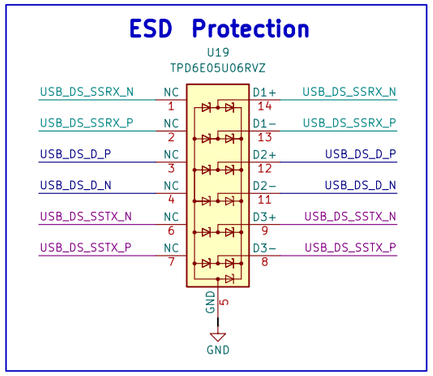

Sheet: /DOWNSTREAM_CONNECTORS3/
File: DOWNSTREAM_CONNECOTRS.kicad_sch

Title:

Size: A3	Date: 2026-02-20	Rev: Rev 1
KiCad E.D.A. 10.0.0-rc2		Id: 12/13

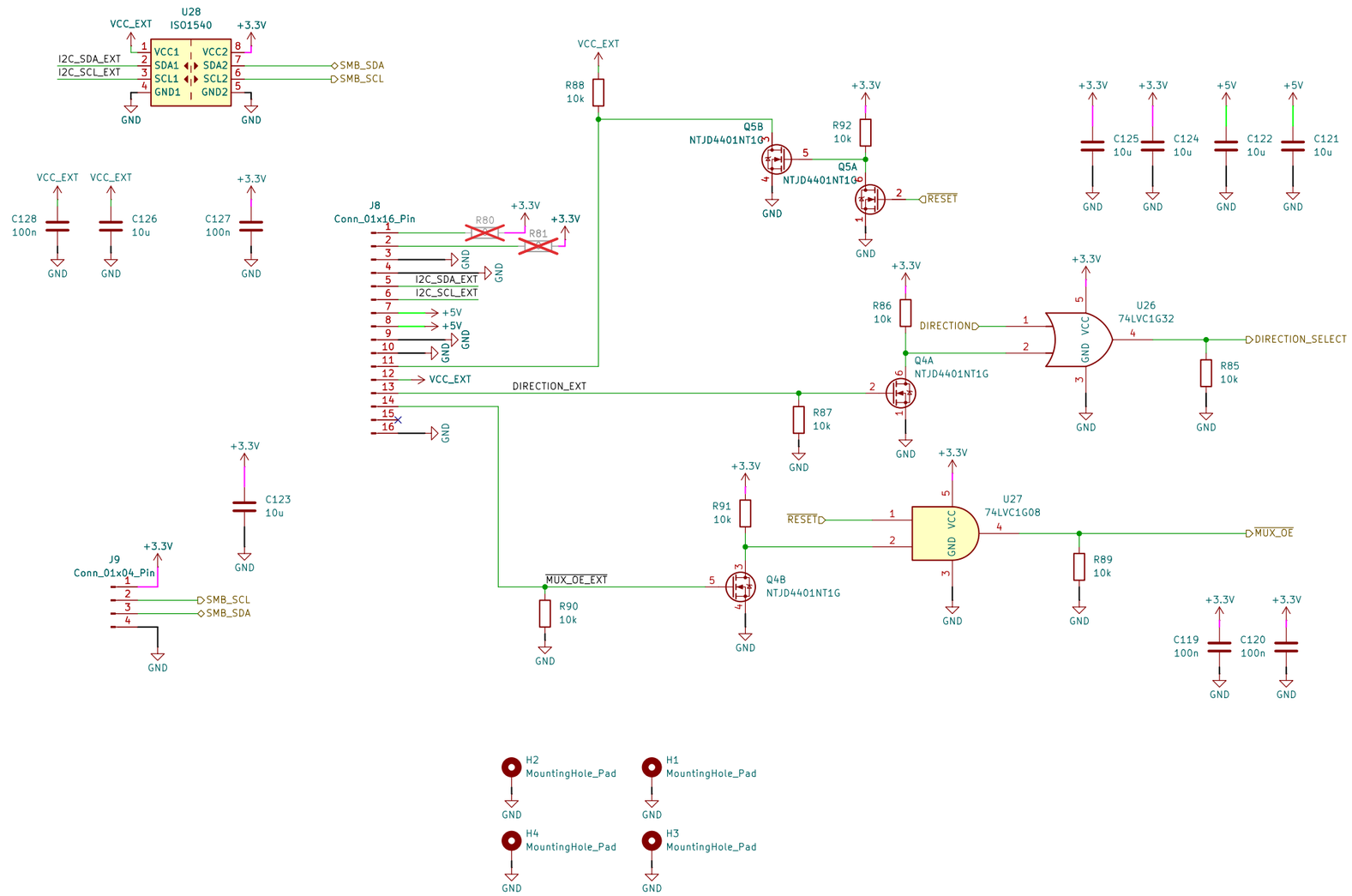

Sheet: /EXTENSION_HEADER_DEBUG/
File: EXTENSION_HEADER_DEBUG.kicad_sch

Title:

Size: A3	Date: 2026-02-20	Rev: Rev 1
KiCad E.D.A. 10.0.0-rc2		Id: 13/13