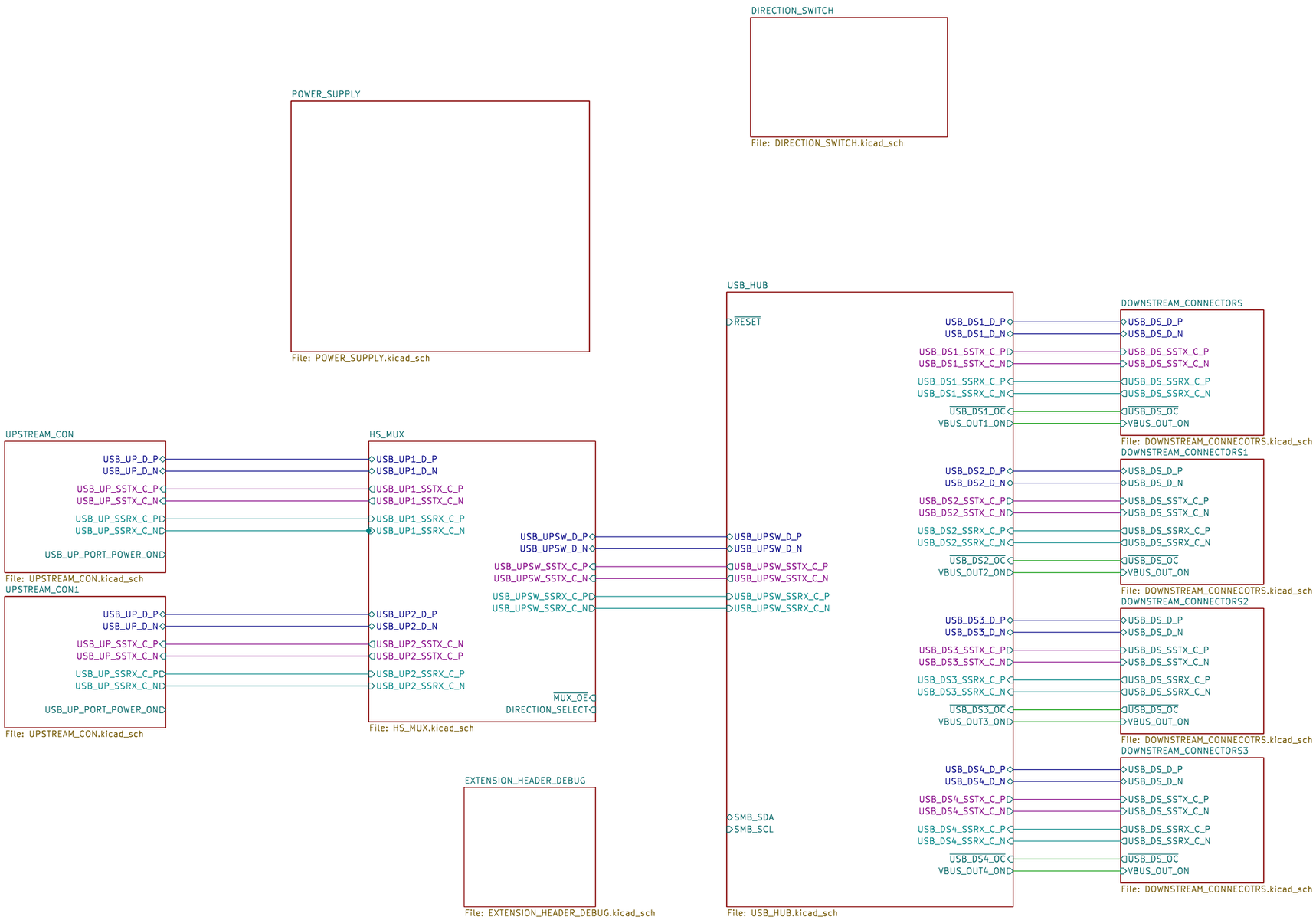

Sheet: /
File: USB_3_SWITCHER.kicad_sch

Title: USB 3.1 switcher

Size: A3	Date: 2026-02-20	Rev: Rev 1
KiCad E.D.A. 9.0.7		Id: 1/12

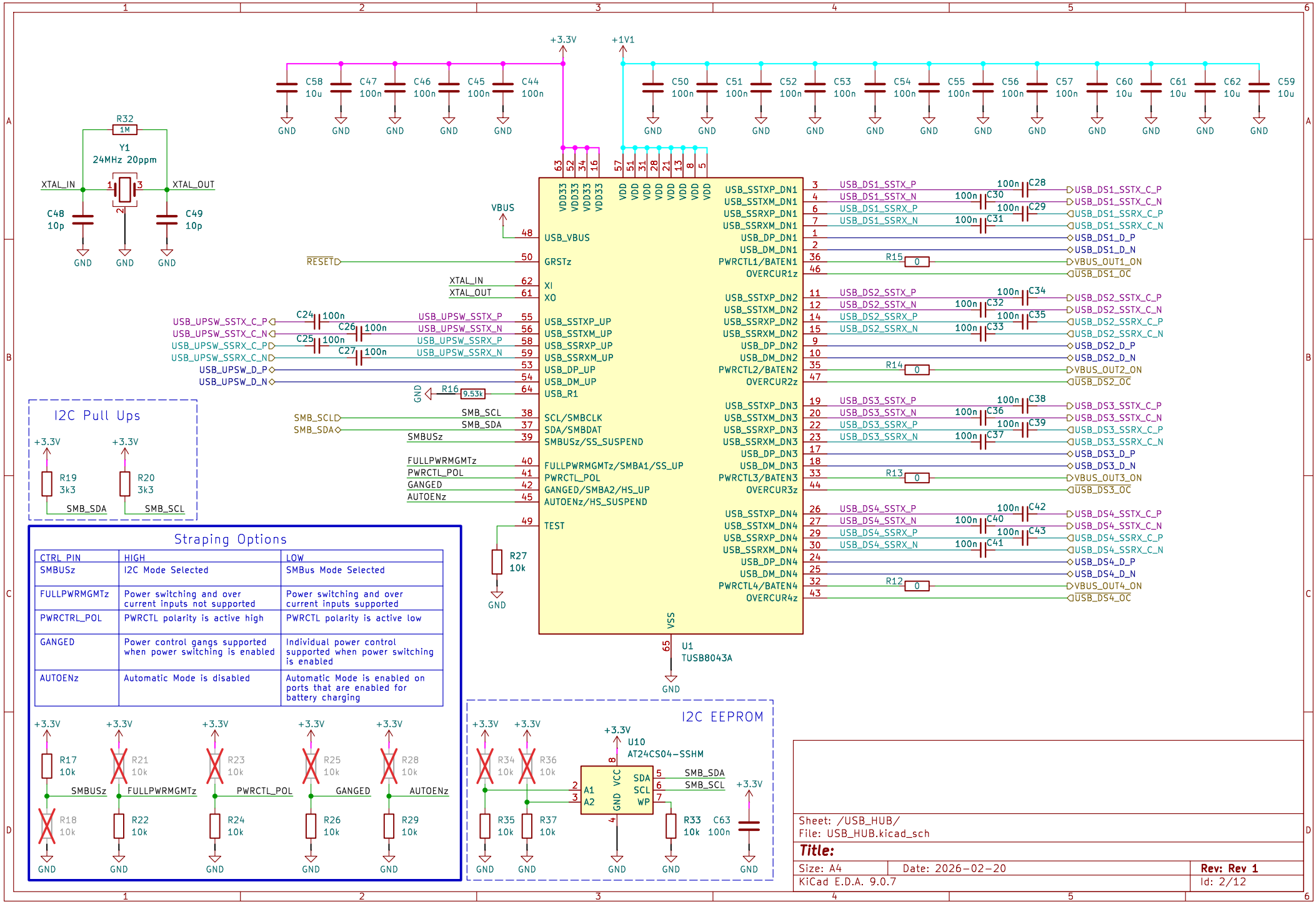
+3.3V
+1V1
C58 10u
C47 100n
C46 100n
C45 100n
C44 100n
C50 100n
C51 100n
C52 100n
C53 100n
C54 100n
C55 100n
C56 100n
C57 100n
C60 10u
C61 10u
C62 10u
C59 10u
GND
R32 1M
Y1 24MHz 20ppm
XTAL_IN
XTAL_OUT
C48 10p
C49 10p
VBUS
RESET
XTAL_IN
XTAL_OUT
USB_UPSW_SSTX_C_P
USB_UPSW_SSTX_C_N
USB_UPSW_SSRX_C_P
USB_UPSW_SSRX_C_N
USB_UPSW_D_P
USB_UPSW_D_N
C24 100n
C25 100n
C26 100n
C27 100n
USB_UPSW_SSTX_P
USB_UPSW_SSTX_N
USB_UPSW_SSRX_P
USB_UPSW_SSRX_N
R16 9.53k
SMB_SCL
SMB_SDA
SMBUSz
FULLPWRMGMTz
PWRCTL_POL
GANGED
AUTOENz
R27 10k
VDD33
VDD
VSS
USB_VBUS
GRSTz
XI
XO
USB_SSTXP_UP
USB_SSTXM_UP
USB_SSRXP_UP
USB_SSRXM_UP
USB_DP_UP
USB_DM_UP
USB_R1
SCL/SMBCLK
SDA/SMBDAT
SMBUSz/SS_SUSPEND
FULLPWRMGMTz/SMBA1/SS_UP
PWRCTL_POL
GANGED/SMBA2/HS_UP
AUTOENz/HS_SUSPEND
TEST
USB_SSTXP_DN1
USB_SSTXM_DN1
USB_SSRXP_DN1
USB_SSRXM_DN1
USB_DP_DN1
USB_DM_DN1
PWRCTL1/BATEN1
OVERCUR1z
USB_SSTXP_DN2
USB_SSTXM_DN2
USB_SSRXP_DN2
USB_SSRXM_DN2
USB_DP_DN2
USB_DM_DN2
PWRCTL2/BATEN2
OVERCUR2z
USB_SSTXP_DN3
USB_SSTXM_DN3
USB_SSRXP_DN3
USB_SSRXM_DN3
USB_DP_DN3
USB_DM_DN3
PWRCTL3/BATEN3
OVERCUR3z
USB_SSTXP_DN4
USB_SSTXM_DN4
USB_SSRXP_DN4
USB_SSRXM_DN4
USB_DP_DN4
USB_DM_DN4
PWRCTL4/BATEN4
OVERCUR4z
U1 TUSB8043A
USB_DS1_SSTX_P
USB_DS1_SSTX_N
USB_DS1_SSRX_P
USB_DS1_SSRX_N
USB_DS1_D_P
USB_DS1_D_N
VBUS_OUT1_ON
USB_DS1_OC
USB_DS2_SSTX_P
USB_DS2_SSTX_N
USB_DS2_SSRX_P
USB_DS2_SSRX_N
USB_DS2_D_P
USB_DS2_D_N
VBUS_OUT2_ON
USB_DS2_OC
USB_DS3_SSTX_P
USB_DS3_SSTX_N
USB_DS3_SSRX_P
USB_DS3_SSRX_N
USB_DS3_D_P
USB_DS3_D_N
VBUS_OUT3_ON
USB_DS3_OC
USB_DS4_SSTX_P
USB_DS4_SSTX_N
USB_DS4_SSRX_P
USB_DS4_SSRX_N
USB_DS4_D_P
USB_DS4_D_N
VBUS_OUT4_ON
USB_DS4_OC
R15 0
R14 0
R13 0
R12 0
C28 100n
C29 100n
C30 100n
C31 100n
C32 100n
C33 100n
C34 100n
C35 100n
C36 100n
C37 100n
C38 100n
C39 100n
C40 100n
C41 100n
C42 100n
C43 100n
I2C Pull Ups
R19 3k3
R20 3k3
SMB_SDA
SMB_SCL
Straping Options
CTRL PIN | HIGH | LOW
SMBUSz | I2C Mode Selected | SMBus Mode Selected
FULLPWRMGMTz | Power switching and over current inputs not supported | Power switching and over current inputs supported
PWRCTRL_POL | PWRCTL polarity is active high | PWRCTL polarity is active low
GANGED | Power control gangs supported when power switching is enabled | Individual power control supported when power switching is enabled
AUTOENz | Automatic Mode is disabled | Automatic Mode is enabled on ports that are enabled for battery charging
R17 10k
R21 10k
R23 10k
R25 10k
R28 10k
R18 10k
R22 10k
R24 10k
R26 10k
R29 10k
I2C EEPROM
U10 AT24CS04-SSHM
R34 10k
R36 10k
R35 10k
R37 10k
R33 10k
C63 100n
A1
A2
VCC
SDA
SCL
WP
Sheet: /USB_HUB/
File: USB_HUB.kicad_sch
Title:
Size: A4
Date: 2026-02-20
Rev: Rev 1
KiCad E.D.A. 9.0.7
Id: 2/12

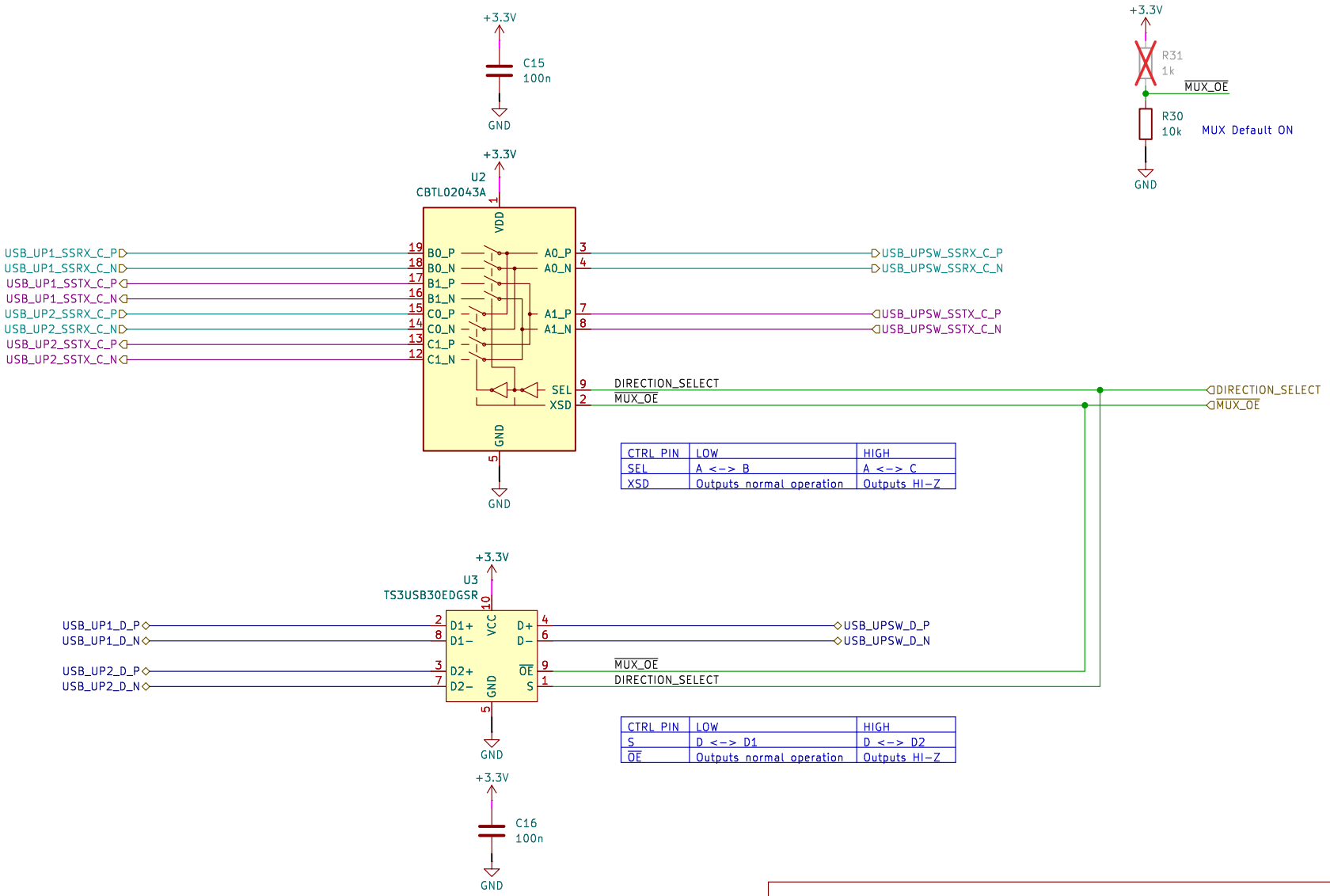

CTRL PIN	LOW	HIGH
SEL	A <-> B	A <-> C
XSD	Outputs normal operation	Outputs HI-Z

CTRL PIN	LOW	HIGH
S	D <-> D1	D <-> D2
$\overline{OE}$	Outputs normal operation	Outputs HI-Z

Sheet: /HS_MUX/
File: HS_MUX.kicad_sch

Title:

Size: A4	Date: 2026-02-20	**Rev: Rev 1**
KiCad E.D.A. 9.0.7		Id: 3/12

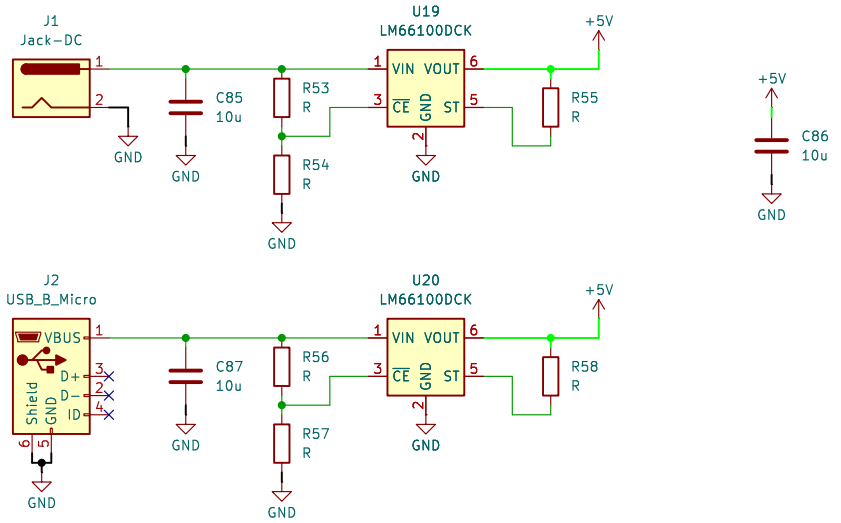

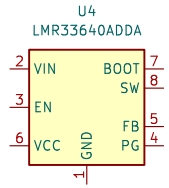

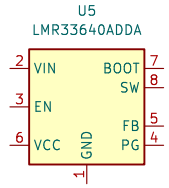

D$\overline{\text{RESET}}$

Sheet: /POWER_SUPPLY/
File: POWER_SUPPLY.kicad_sch

Title:

Size: A4	Date: 2026-02-20	**Rev: Rev 1**
KiCad E.D.A. 9.0.7		Id: 4/12

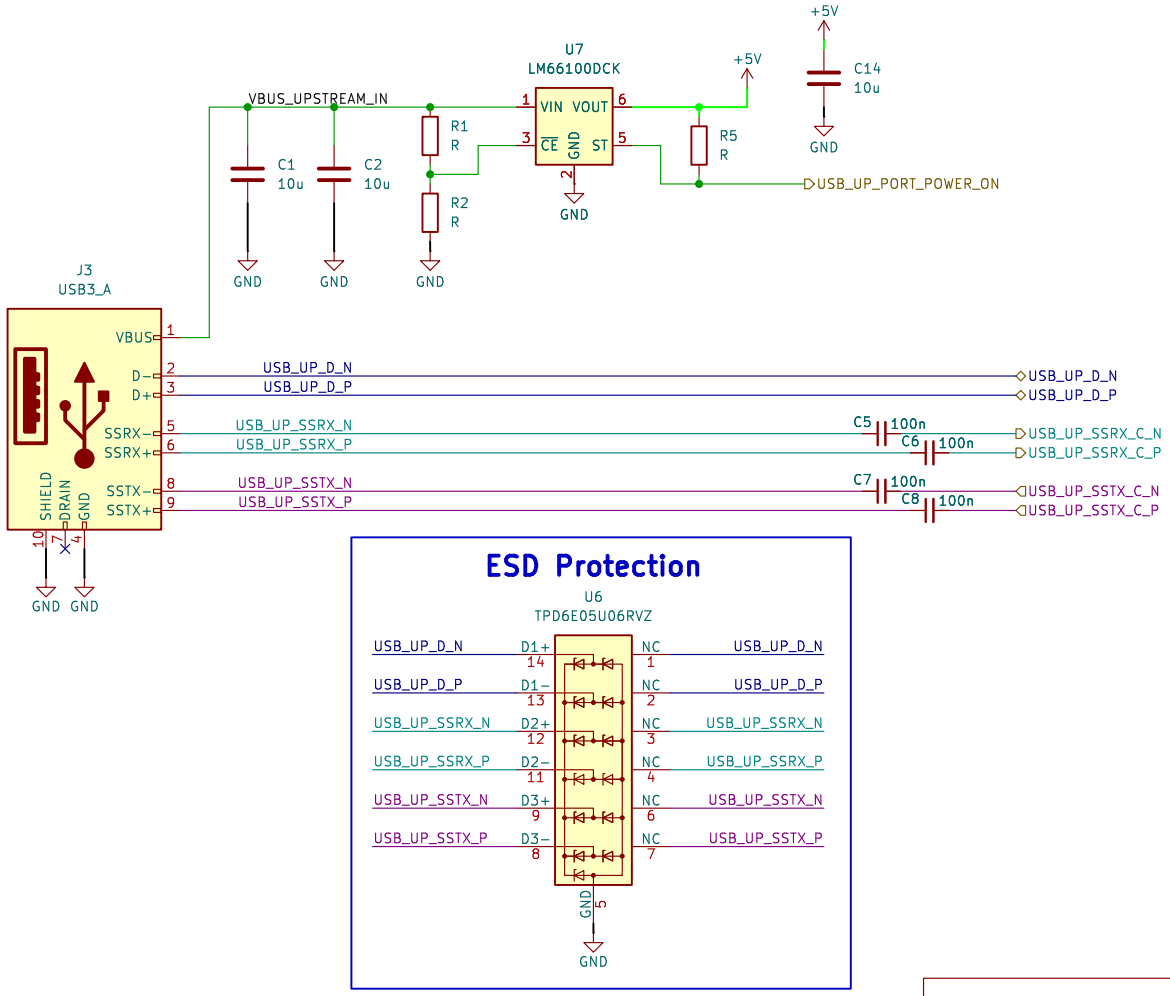

Sheet: /UPSTREAM_CON/
File: UPSTREAM_CON.kicad_sch

Title:

Size: A4	Date: 2026-02-20	**Rev: Rev 1**
KiCad E.D.A. 9.0.7		Id: 5/12

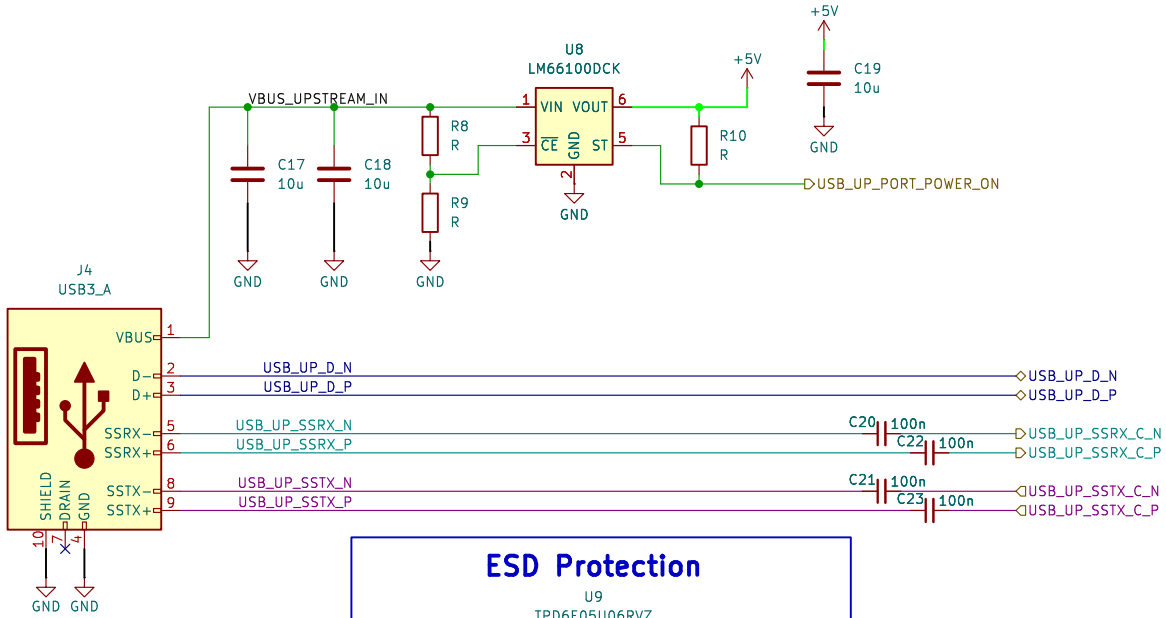

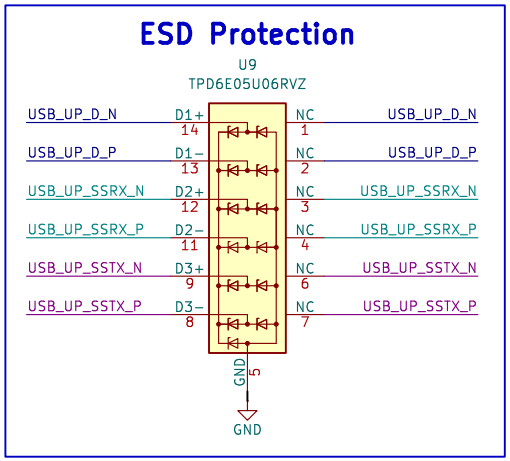

Sheet: /UPSTREAM_CON1/
File: UPSTREAM_CON.kicad_sch

Title:

Size: A4	Date: 2026-02-20	**Rev: Rev 1**
KiCad E.D.A. 9.0.7		Id: 6/12

Sheet: /DIRECTION_SWITCH/
File: DIRECTION_SWITCH.kicad_sch

Title:

Size: A4	Date: 2026-02-20	**Rev: Rev 1**
KiCad E.D.A. 9.0.7		Id: 7/12

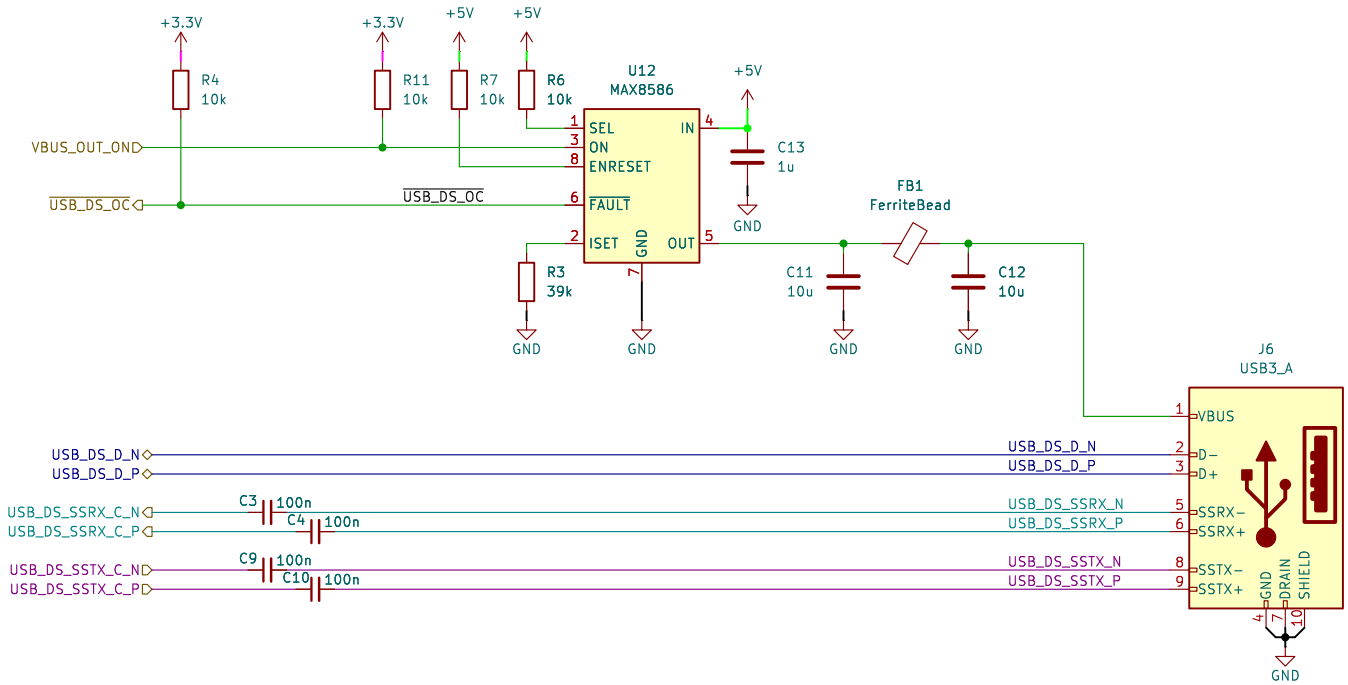

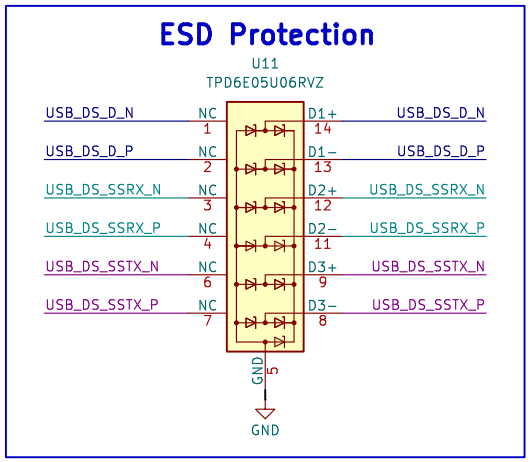

Sheet: /DOWNSTREAM_CONNECTORS/
File: DOWNSTREAM_CONNECOTRS.kicad_sch

Title:

Size: A4	Date: 2026-02-20	**Rev: Rev 1**
KiCad E.D.A. 9.0.7		Id: 8/12

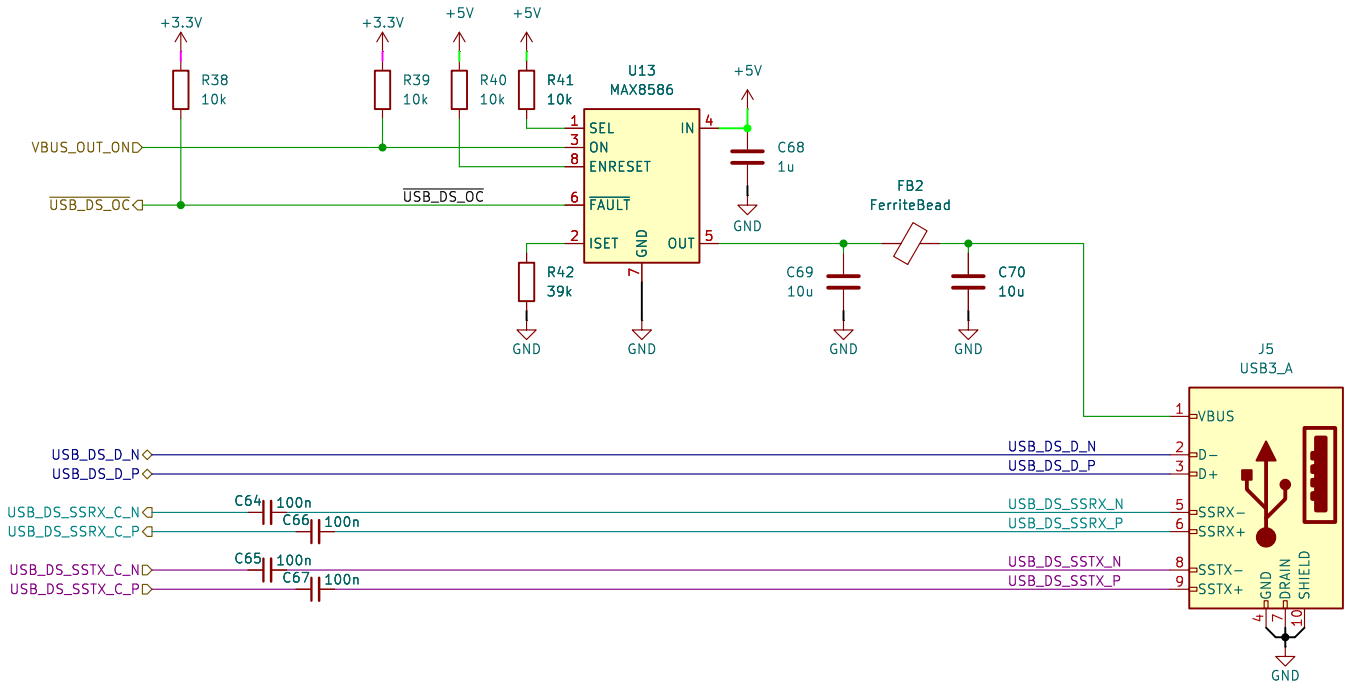

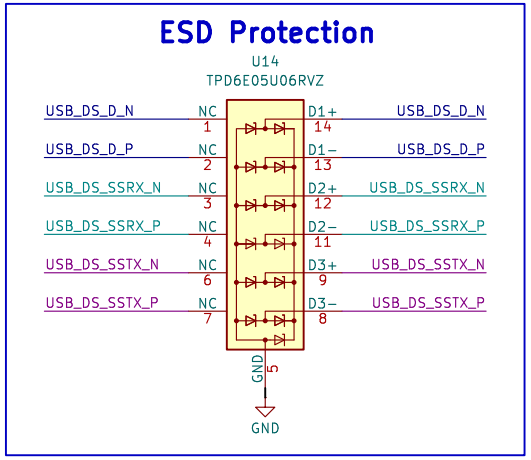

Sheet: /DOWNSTREAM_CONNECTORS1/
File: DOWNSTREAM_CONNECOTRS.kicad_sch

Title:

Size: A4	Date: 2026-02-20	**Rev: Rev 1**
KiCad E.D.A. 9.0.7		Id: 9/12

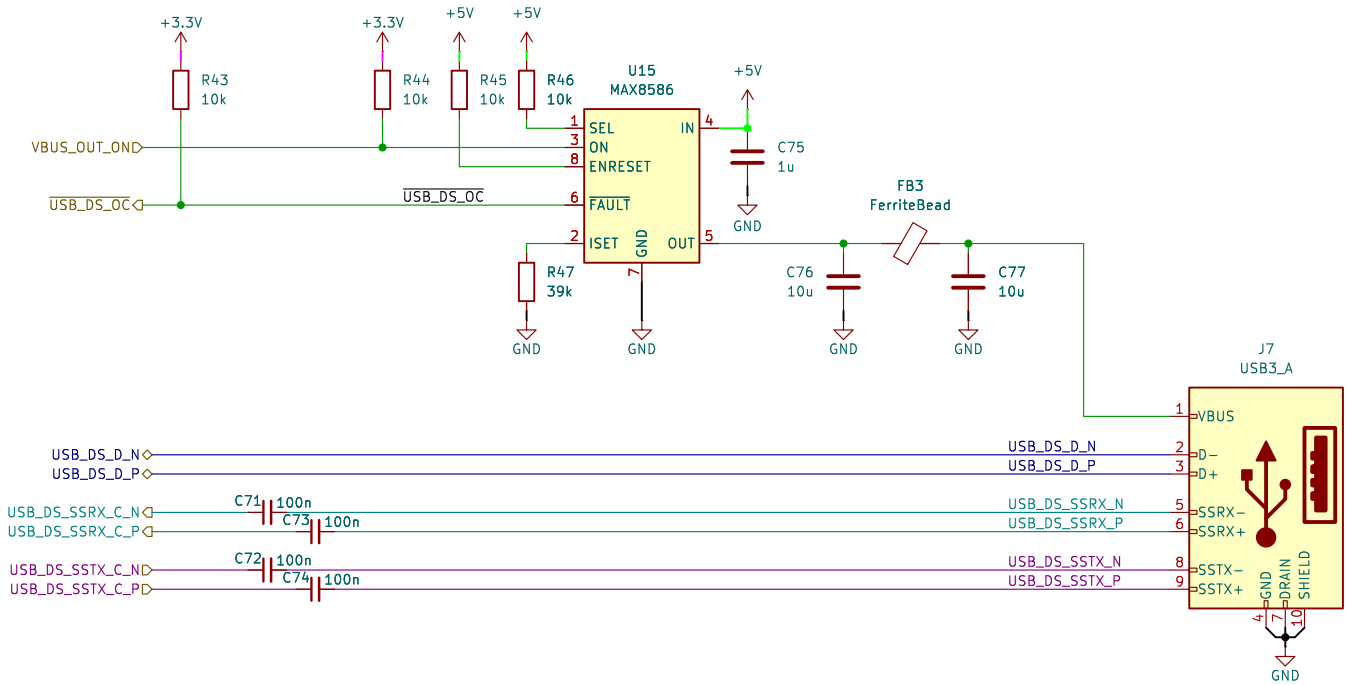

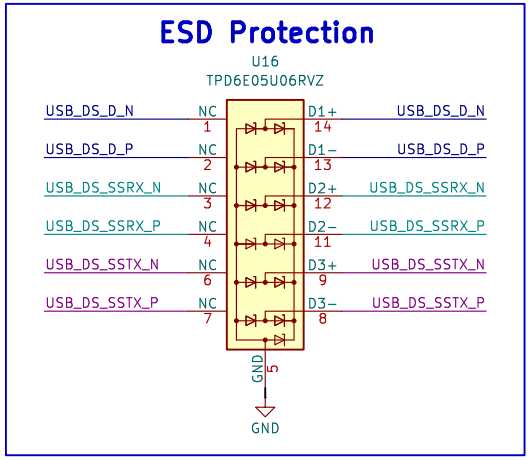

Sheet: /DOWNSTREAM_CONNECTORS2/
File: DOWNSTREAM_CONNECOTRS.kicad_sch

Title:

Size: A4	Date: 2026-02-20	**Rev: Rev 1**
KiCad E.D.A. 9.0.7		Id: 10/12

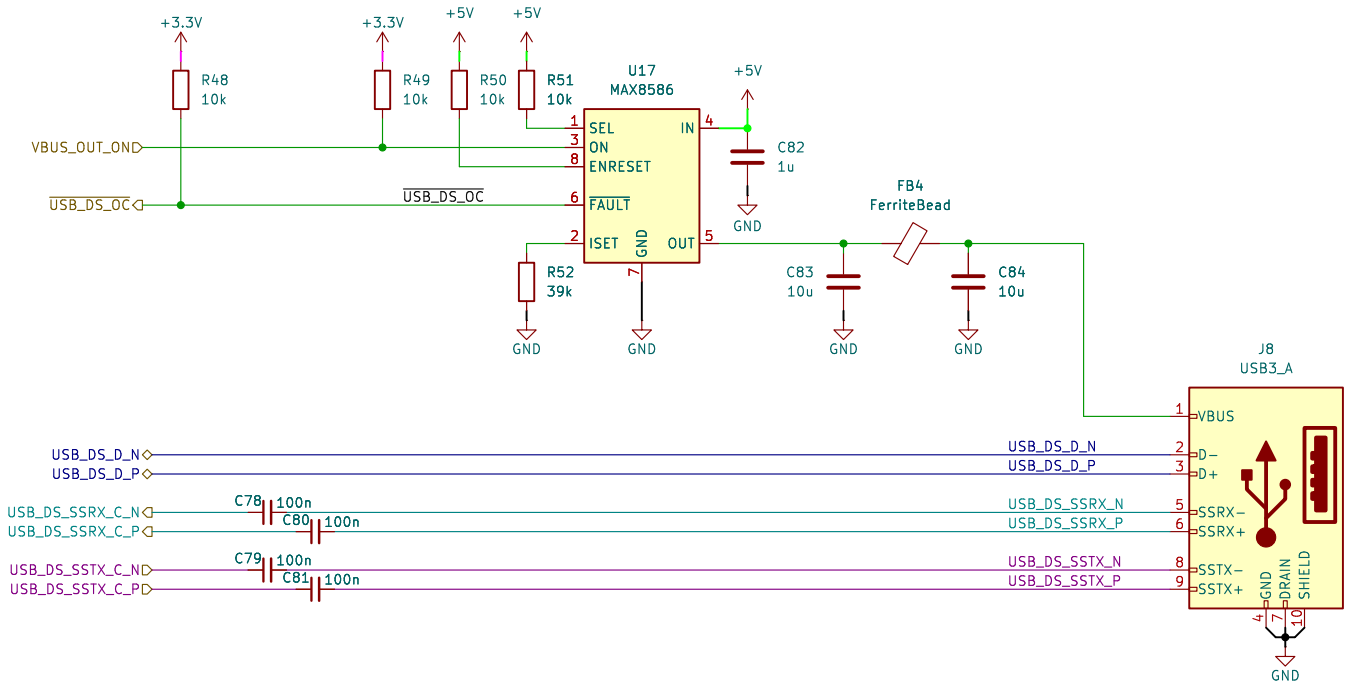

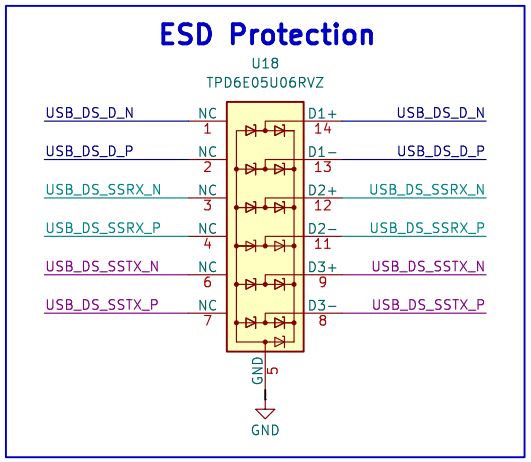

Sheet: /DOWNSTREAM_CONNECTORS3/
File: DOWNSTREAM_CONNECOTRS.kicad_sch

Title:

Size: A4	Date: 2026-02-20	**Rev: Rev 1**
KiCad E.D.A. 9.0.7		Id: 11/12

Sheet: /EXTENSION_HEADER_DEBUG/
File: EXTENSION_HEADER_DEBUG.kicad_sch

Title:

Size: A4	Date: 2026-02-20	**Rev: Rev 1**
KiCad E.D.A. 9.0.7		Id: 12/12