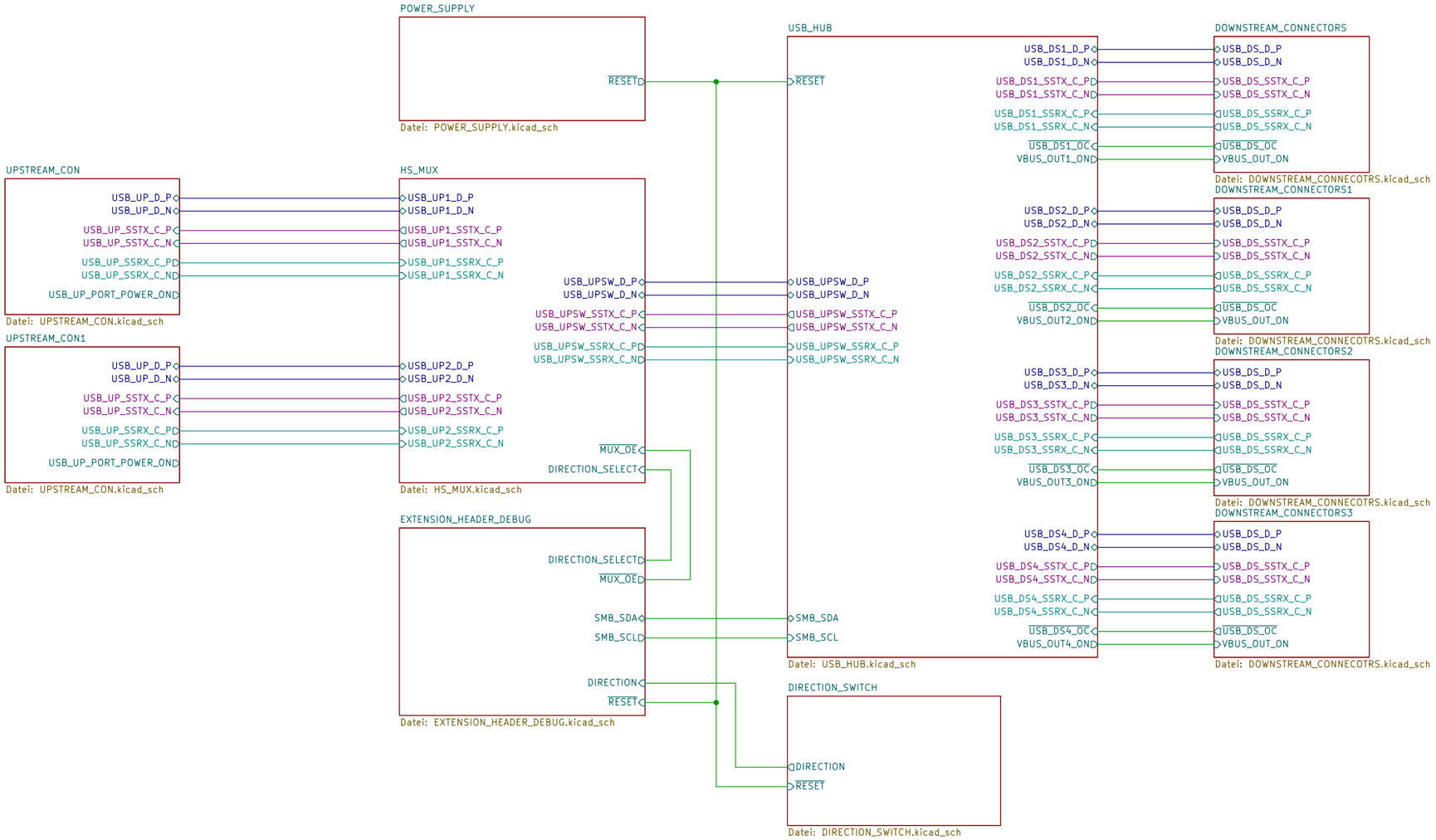

Sheet: /
File: USB_3_SWITCHER.kicad_sch

Title: USB 3.1 switcher

Size: A3	Date: 2026-02-20	Rev: Rev 1
KiCad E.D.A. 10.0.0-rc1.1		Id: 1/12

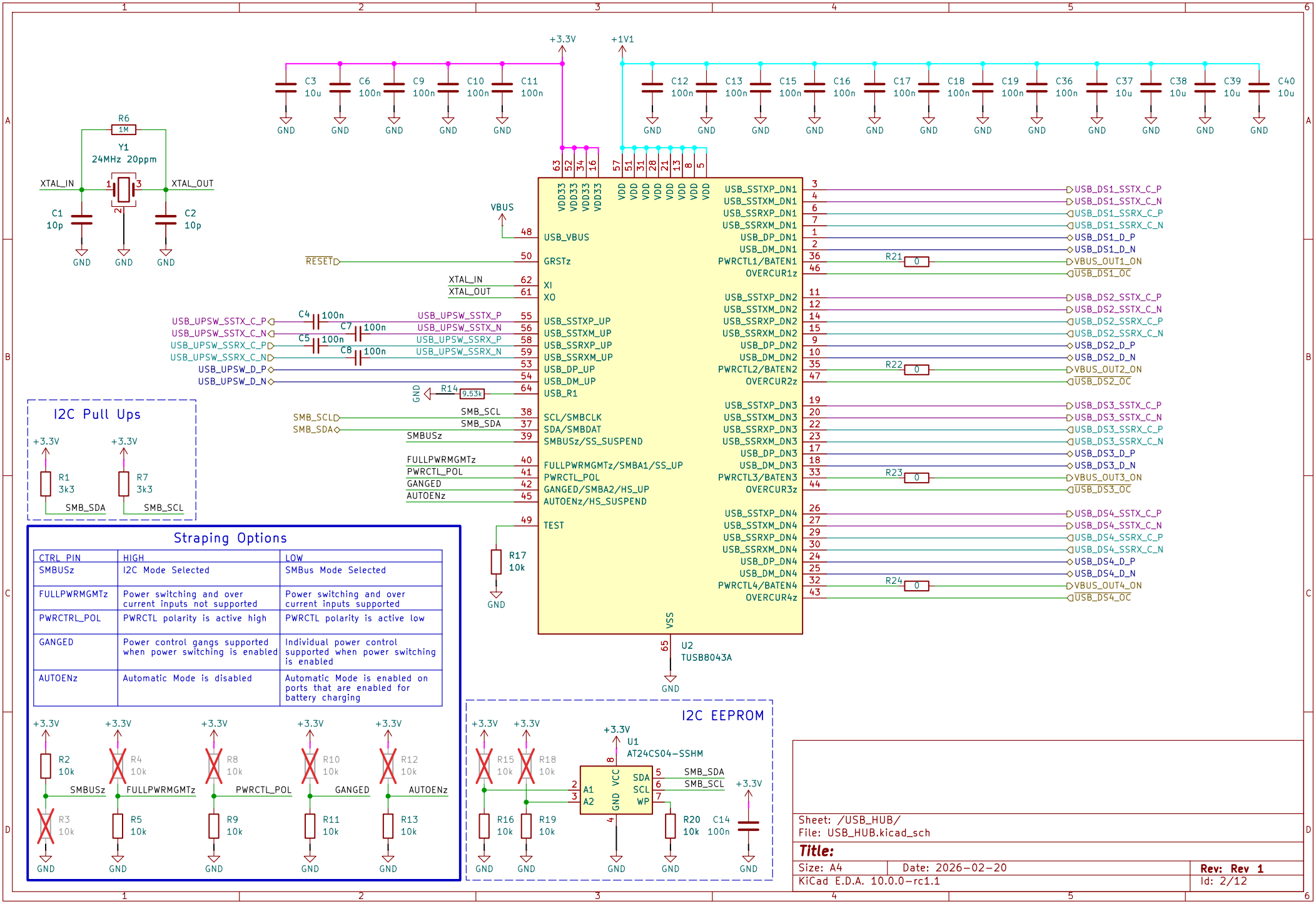
+3.3V
+1V1
C3 10u
C6 100n
C9 100n
C10 100n
C11 100n
C12 100n
C13 100n
C15 100n
C16 100n
C17 100n
C18 100n
C19 100n
C36 100n
C37 10u
C38 10u
C39 10u
C40 10u
GND
R6 1M
Y1 24MHz 20ppm
XTAL_IN
XTAL_OUT
C1 10p
C2 10p
VBUS
RESET
USB_VBUS
GRSTz
XI
XO
USB_UPSW_SSTX_C_P
USB_UPSW_SSTX_C_N
USB_UPSW_SSRX_C_P
USB_UPSW_SSRX_C_N
USB_UPSW_D_P
USB_UPSW_D_N
C4 100n
C5 100n
C7 100n
C8 100n
USB_UPSW_SSTX_P
USB_UPSW_SSTX_N
USB_UPSW_SSRX_P
USB_UPSW_SSRX_N
USB_SSTXP_UP
USB_SSTXM_UP
USB_SSRXP_UP
USB_SSRXM_UP
USB_DP_UP
USB_DM_UP
USB_R1
R14 9.53k
SMB_SCL
SMB_SDA
SCL/SMBCLK
SDA/SMBDAT
SMBUSz
SMBUSz/SS_SUSPEND
FULLPWRMGMTz
PWRCTL_POL
GANGED
AUTOENz
FULLPWRMGMTz/SMBA1/SS_UP
PWRCTL_POL
GANGED/SMBA2/HS_UP
AUTOENz/HS_SUSPEND
TEST
R17 10k
VDD33
VDD
VSS
U2
TUSB8043A
USB_SSTXP_DN1
USB_SSTXM_DN1
USB_SSRXP_DN1
USB_SSRXM_DN1
USB_DP_DN1
USB_DM_DN1
PWRCTL1/BATEN1
OVERCUR1z
USB_SSTXP_DN2
USB_SSTXM_DN2
USB_SSRXP_DN2
USB_SSRXM_DN2
USB_DP_DN2
USB_DM_DN2
PWRCTL2/BATEN2
OVERCUR2z
USB_SSTXP_DN3
USB_SSTXM_DN3
USB_SSRXP_DN3
USB_SSRXM_DN3
USB_DP_DN3
USB_DM_DN3
PWRCTL3/BATEN3
OVERCUR3z
USB_SSTXP_DN4
USB_SSTXM_DN4
USB_SSRXP_DN4
USB_SSRXM_DN4
USB_DP_DN4
USB_DM_DN4
PWRCTL4/BATEN4
OVERCUR4z
R21 0
R22 0
R23 0
R24 0
USB_DS1_SSTX_C_P
USB_DS1_SSTX_C_N
USB_DS1_SSRX_C_P
USB_DS1_SSRX_C_N
USB_DS1_D_P
USB_DS1_D_N
VBUS_OUT1_ON
USB_DS1_OC
USB_DS2_SSTX_C_P
USB_DS2_SSTX_C_N
USB_DS2_SSRX_C_P
USB_DS2_SSRX_C_N
USB_DS2_D_P
USB_DS2_D_N
VBUS_OUT2_ON
USB_DS2_OC
USB_DS3_SSTX_C_P
USB_DS3_SSTX_C_N
USB_DS3_SSRX_C_P
USB_DS3_SSRX_C_N
USB_DS3_D_P
USB_DS3_D_N
VBUS_OUT3_ON
USB_DS3_OC
USB_DS4_SSTX_C_P
USB_DS4_SSTX_C_N
USB_DS4_SSRX_C_P
USB_DS4_SSRX_C_N
USB_DS4_D_P
USB_DS4_D_N
VBUS_OUT4_ON
USB_DS4_OC
I2C Pull Ups
R1 3k3
R7 3k3
SMB_SDA
SMB_SCL
Straping Options
CTRL PIN | HIGH | LOW
SMBUSz | I2C Mode Selected | SMBus Mode Selected
FULLPWRMGMTz | Power switching and over current inputs not supported | Power switching and over current inputs supported
PWRCTRL_POL | PWRCTL polarity is active high | PWRCTL polarity is active low
GANGED | Power control gangs supported when power switching is enabled | Individual power control supported when power switching is enabled
AUTOENz | Automatic Mode is disabled | Automatic Mode is enabled on ports that are enabled for battery charging
R2 10k
R4 10k
R8 10k
R10 10k
R12 10k
R3 10k
R5 10k
R9 10k
R11 10k
R13 10k
I2C EEPROM
U1
AT24CS04-SSHM
R15 10k
R18 10k
R16 10k
R19 10k
R20 10k
C14 100n
A1
A2
VCC
SDA
SCL
WP
Sheet: /USB_HUB/
File: USB_HUB.kicad_sch
Title:
Size: A4
Date: 2026-02-20
Rev: Rev 1
KiCad E.D.A. 10.0.0-rc1.1
Id: 2/12

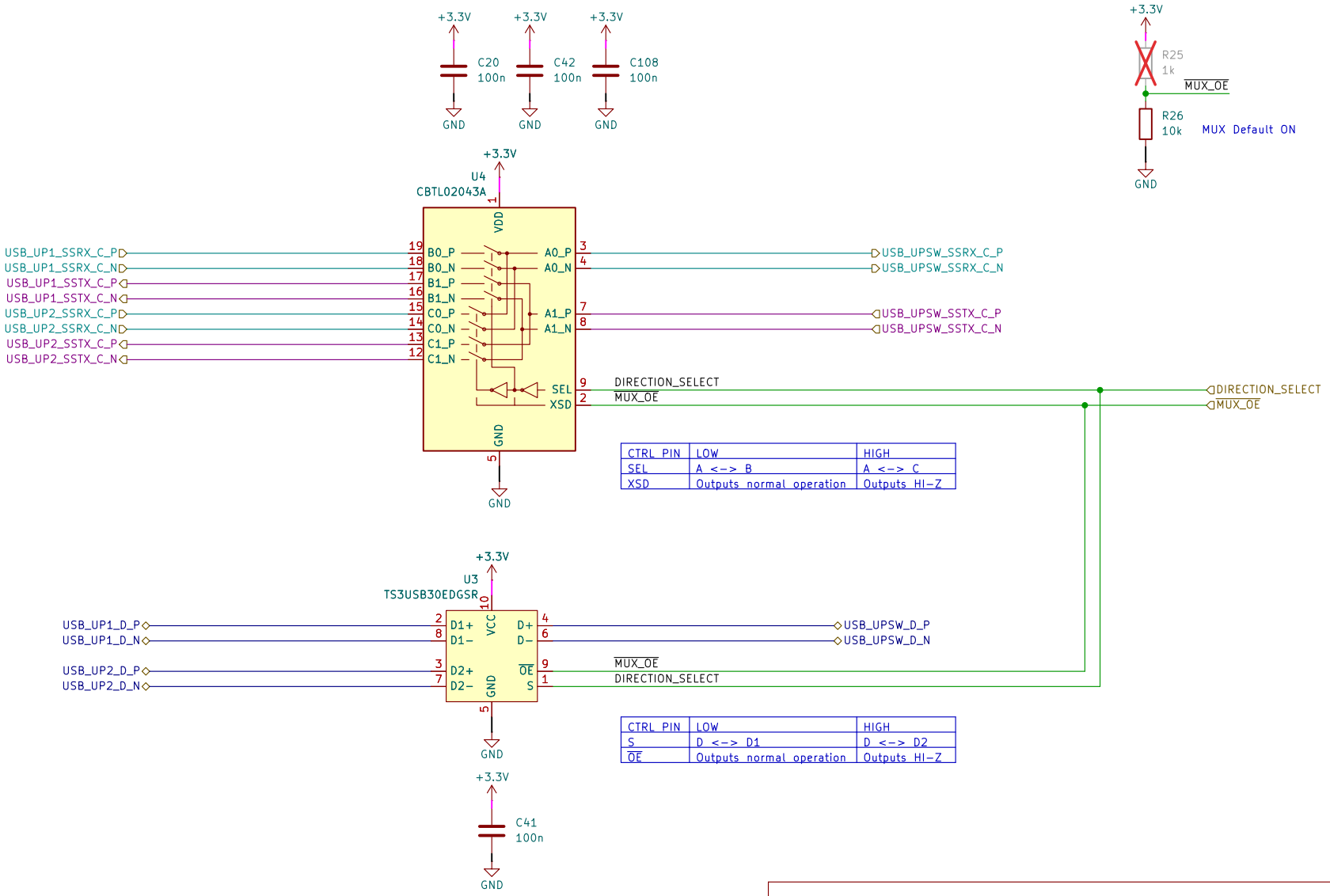

CTRL PIN	LOW	HIGH
SEL	A <-> B	A <-> C
XSD	Outputs normal operation	Outputs HI-Z

CTRL PIN	LOW	HIGH
S	D <-> D1	D <-> D2
$\overline{OE}$	Outputs normal operation	Outputs HI-Z

Sheet: /HS_MUX/
File: HS_MUX.kicad_sch

Title:

Size: A4	Date: 2026-02-20	**Rev: Rev 1**
KiCad E.D.A. 10.0.0-rc1.1		Id: 3/12

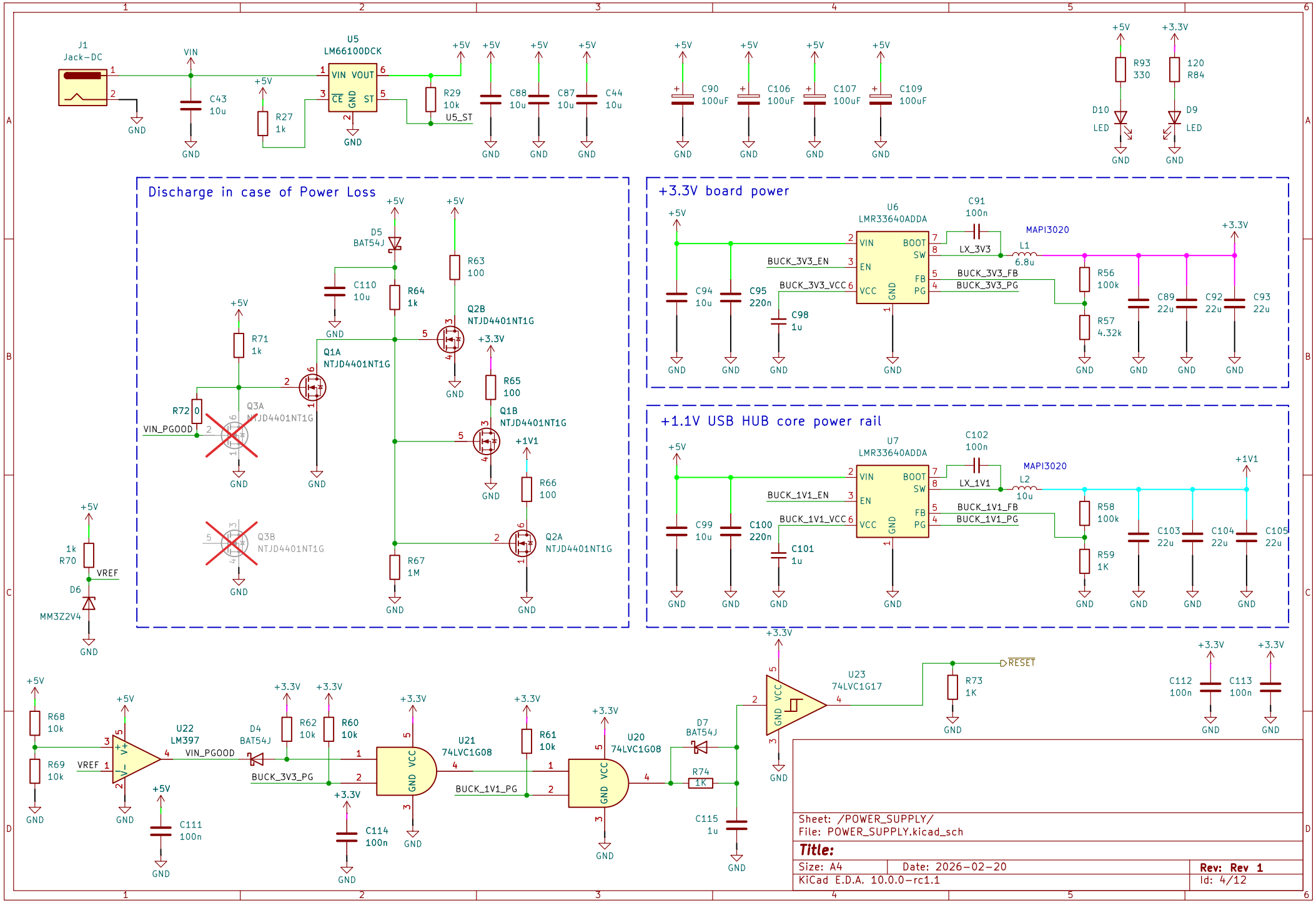
J1
Jack-DC
VIN
C43
10u
U5
LM66100DCK
VIN VOUT
CE GND ST
R27
1k
R29
10k
U5_ST
C88
10u
C87
10u
C44
10u
C90
100uF
C106
100uF
C107
100uF
C109
100uF
R93
330
D10
LED
120
R84
D9
LED
Discharge in case of Power Loss
D5
BAT54J
C110
10u
R64
1k
R63
100
Q2B
NTJD4401NT1G
R71
1k
Q1A
NTJD4401NT1G
R72
0
VIN_PGOOD
Q3A
NTJD4401NT1G
R65
100
Q1B
NTJD4401NT1G
R66
100
Q3B
NTJD4401NT1G
Q2A
NTJD4401NT1G
R67
1M
R70
1k
VREF
D6
MM3Z2V4
+3.3V board power
U6
LMR33640ADDA
VIN BOOT
EN SW
FB
VCC PG
GND
C91
100n
LX_3V3
MAPI3020
L1
6.8u
BUCK_3V3_EN
BUCK_3V3_VCC
BUCK_3V3_FB
BUCK_3V3_PG
C94
10u
C95
220n
C98
1u
R56
100k
R57
4.32k
C89
22u
C92
22u
C93
22u
+1.1V USB HUB core power rail
U7
LMR33640ADDA
C102
100n
LX_1V1
L2
10u
BUCK_1V1_EN
BUCK_1V1_VCC
BUCK_1V1_FB
BUCK_1V1_PG
C99
10u
C100
220n
C101
1u
R58
100k
R59
1K
C103
22u
C104
22u
C105
22u
R68
10k
R69
10k
VREF
U22
LM397
VIN_PGOOD
D4
BAT54J
R62
10k
R60
10k
BUCK_3V3_PG
U21
74LVC1G08
R61
10k
BUCK_1V1_PG
U20
74LVC1G08
D7
BAT54J
R74
1K
C111
100n
C114
100n
C115
1u
U23
74LVC1G17
RESET
R73
1K
C112
100n
C113
100n
Sheet: /POWER_SUPPLY/
File: POWER_SUPPLY.kicad_sch
Title:
Size: A4
Date: 2026-02-20
Rev: Rev 1
KiCad E.D.A. 10.0.0-rc1.1
Id: 4/12

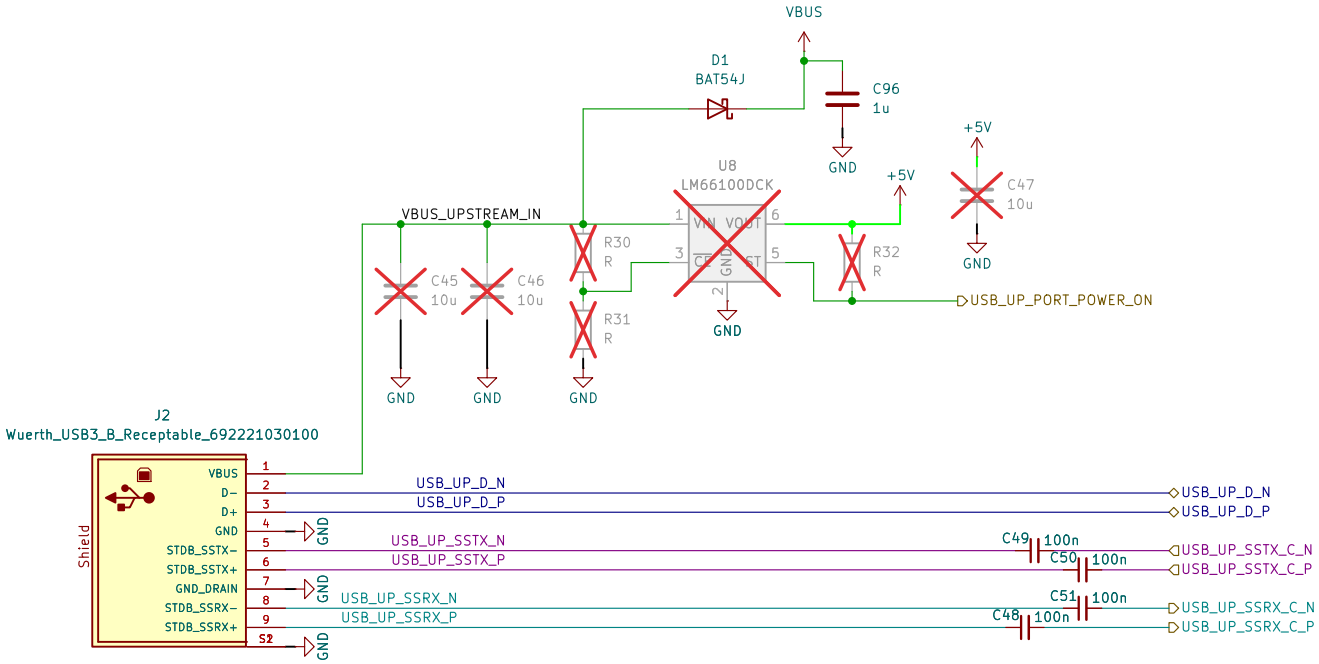

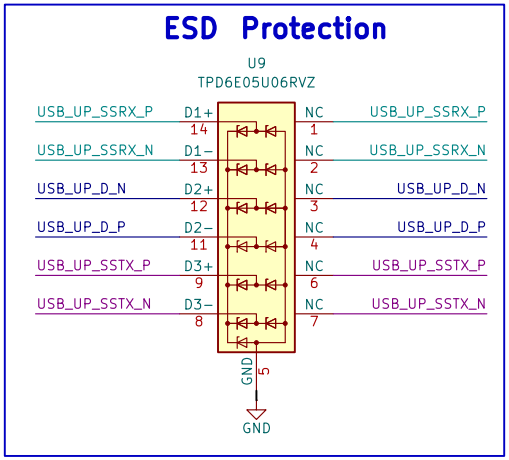

Sheet: /UPSTREAM_CON/
File: UPSTREAM_CON.kicad_sch

Title:

Size: A4	Date: 2026-02-20	Rev: Rev 1
KiCad E.D.A. 10.0.0-rc1.1		Id: 5/12

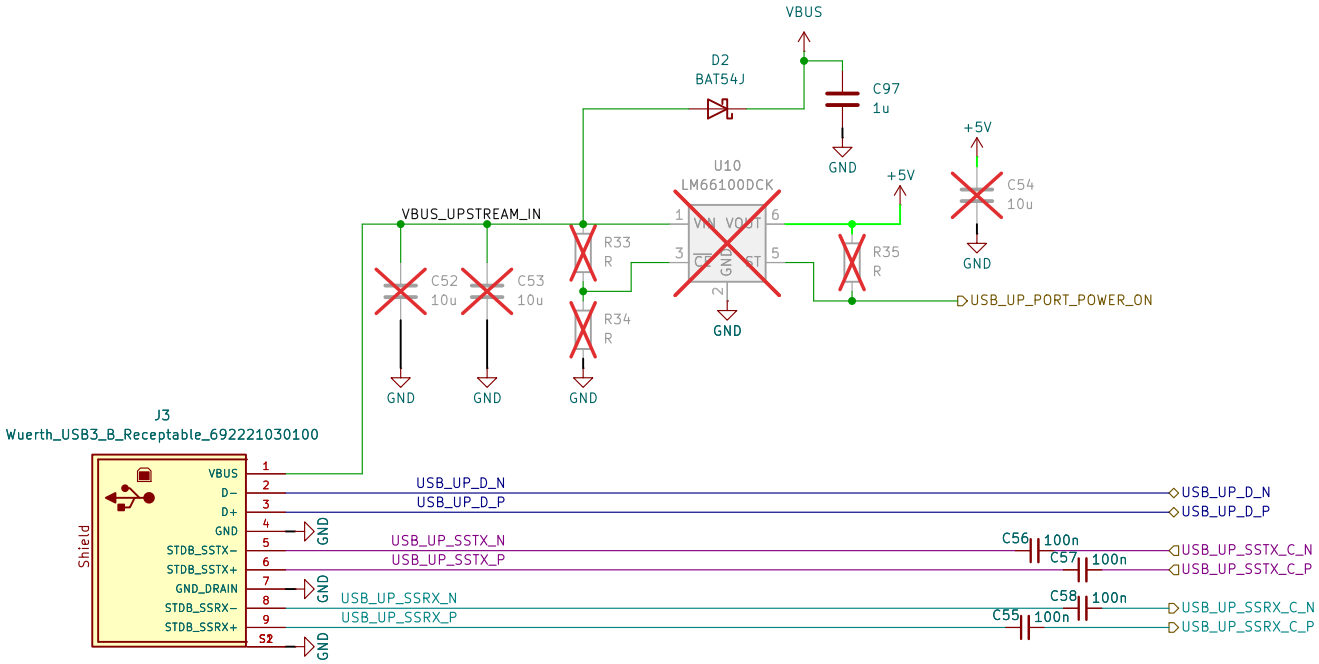

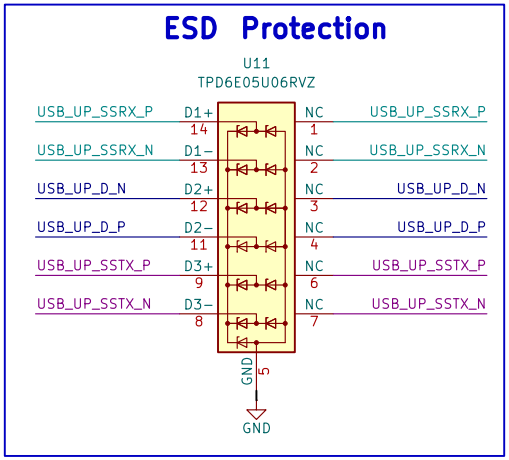

Sheet: /UPSTREAM_CON1/
File: UPSTREAM_CON.kicad_sch

Title:

Size: A4	Date: 2026-02-20	Rev: Rev 1
KiCad E.D.A. 10.0.0-rc1.1		Id: 6/12

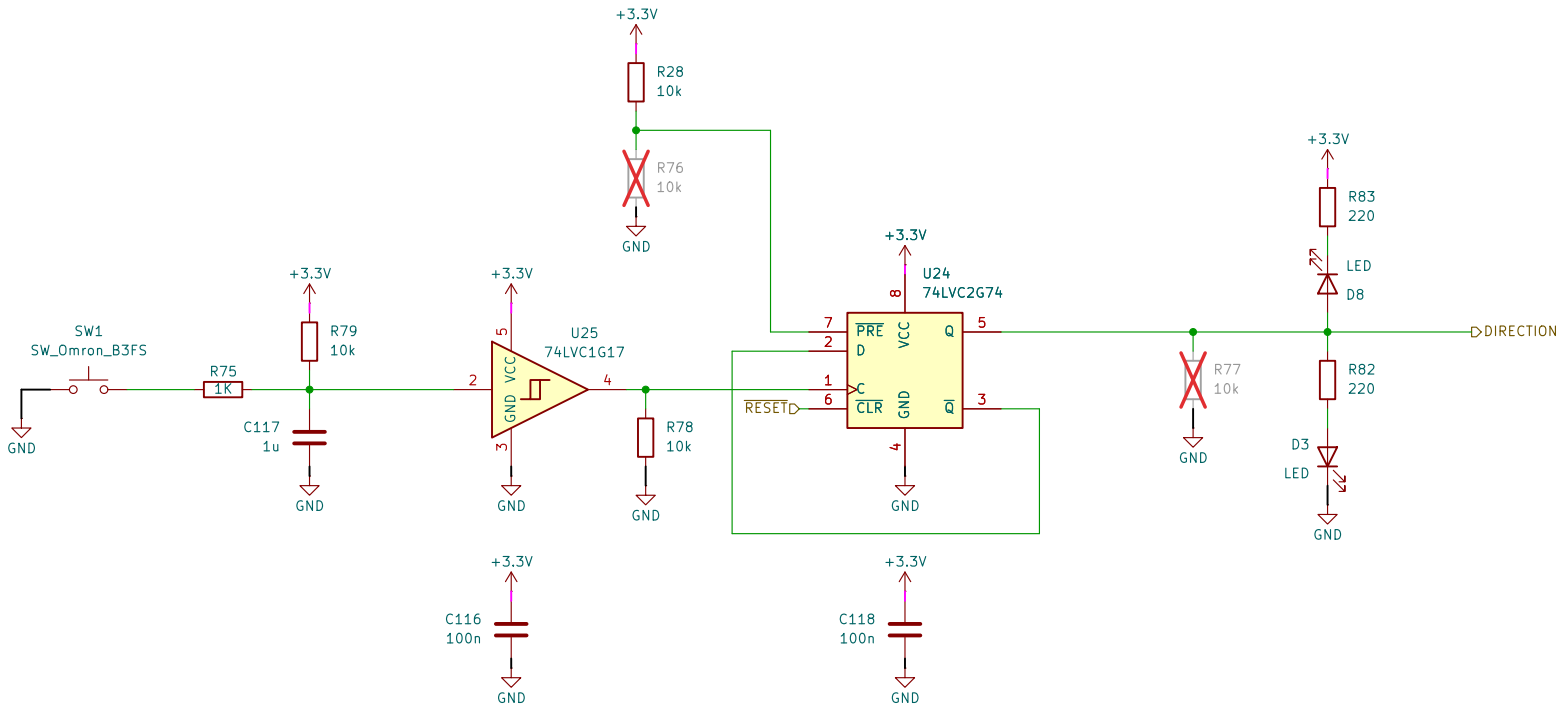

Sheet: /DIRECTION_SWITCH/
File: DIRECTION_SWITCH.kicad_sch

Title:

Size: A4	Date: 2026-02-20	**Rev: Rev 1**
KiCad E.D.A. 10.0.0-rc1.1		Id: 7/12

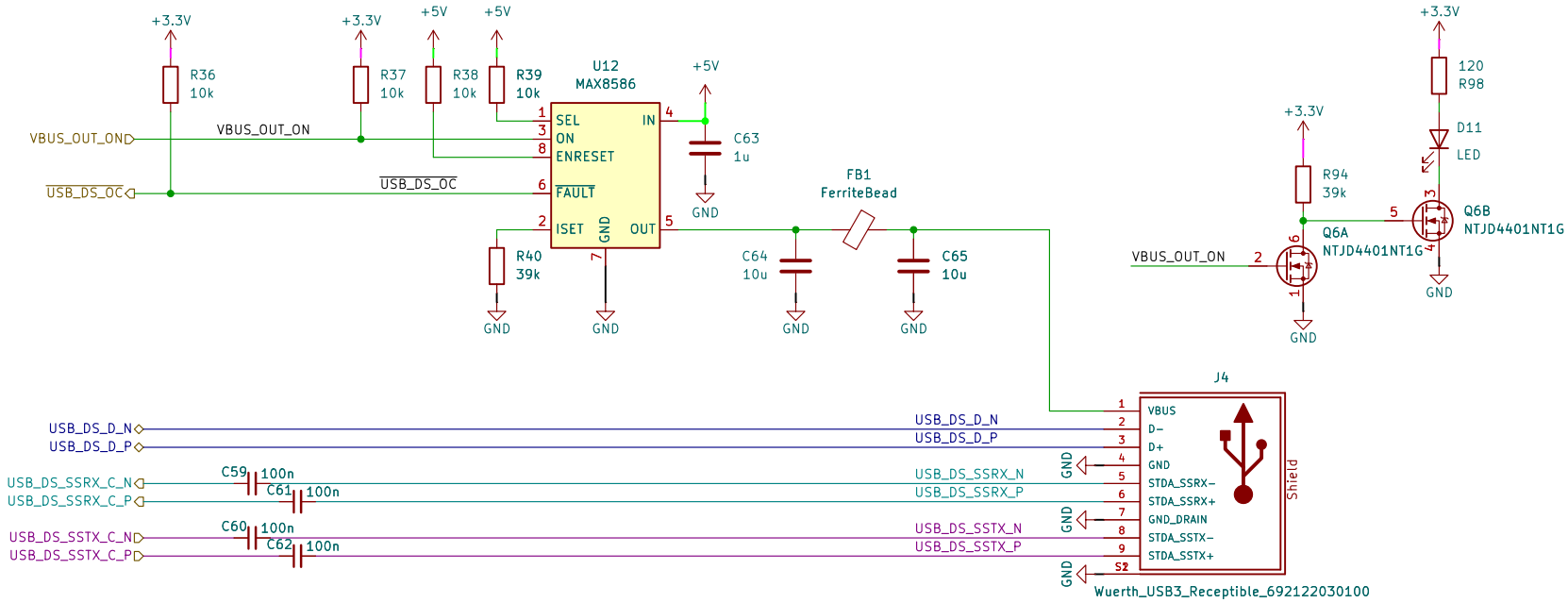

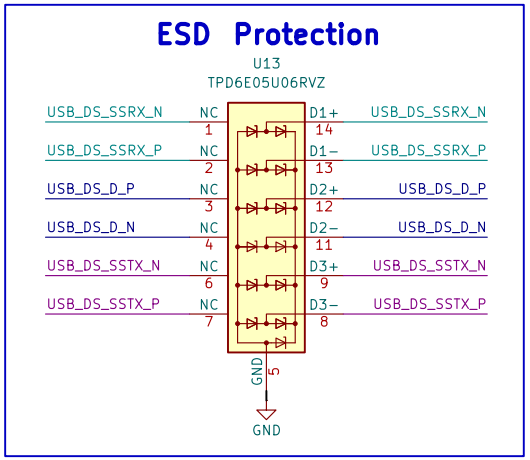

Sheet: /DOWNSTREAM_CONNECTORS/
File: DOWNSTREAM_CONNECOTRS.kicad_sch

Title:

Size: A4	Date: 2026-02-20	Rev: Rev 1
KiCad E.D.A. 10.0.0-rc1.1		Id: 8/12

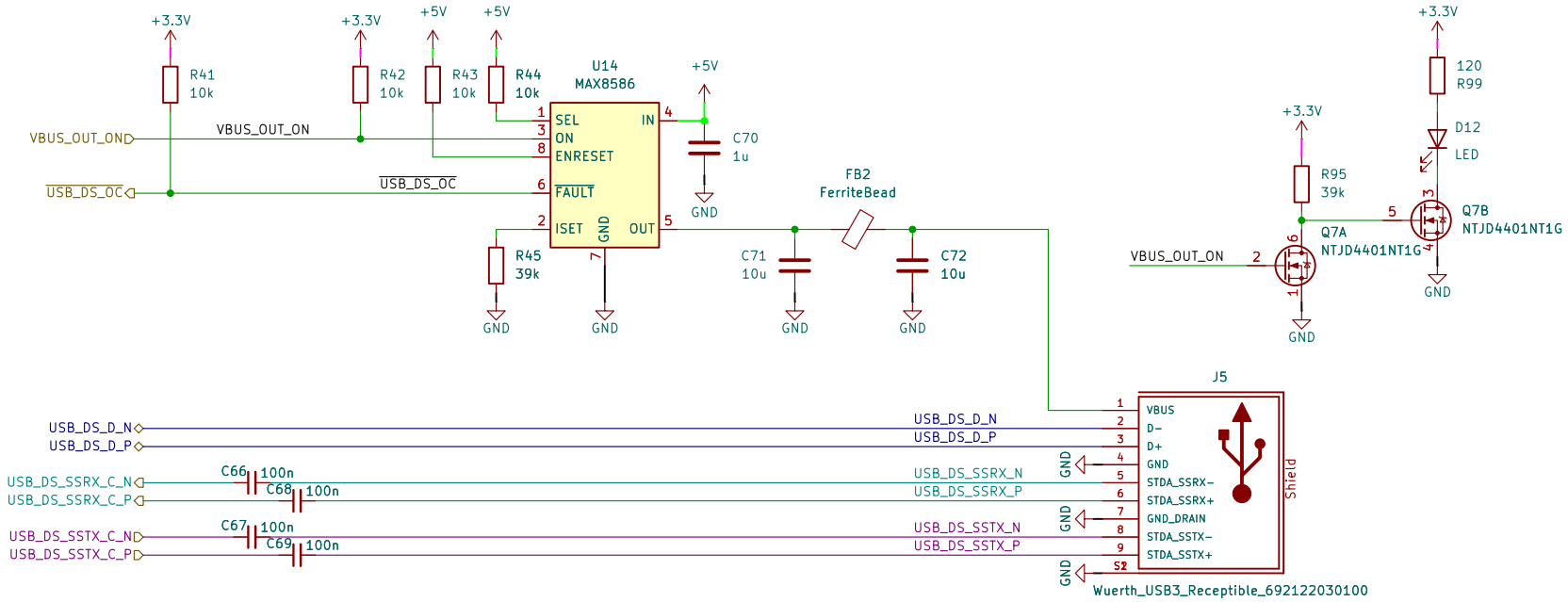

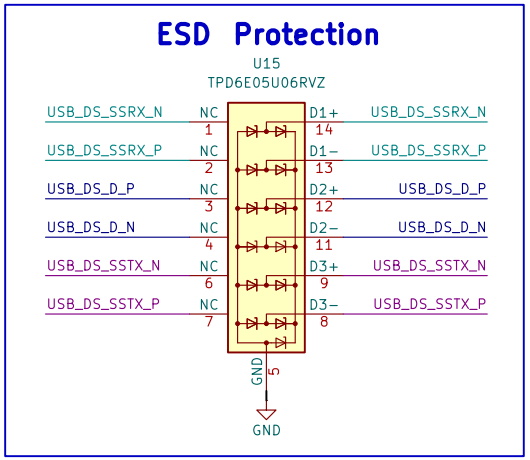

Sheet: /DOWNSTREAM_CONNECTORS1/
File: DOWNSTREAM_CONNECOTRS.kicad_sch

Title:

Size: A4	Date: 2026-02-20	Rev: Rev 1
KiCad E.D.A. 10.0.0-rc1.1		Id: 9/12

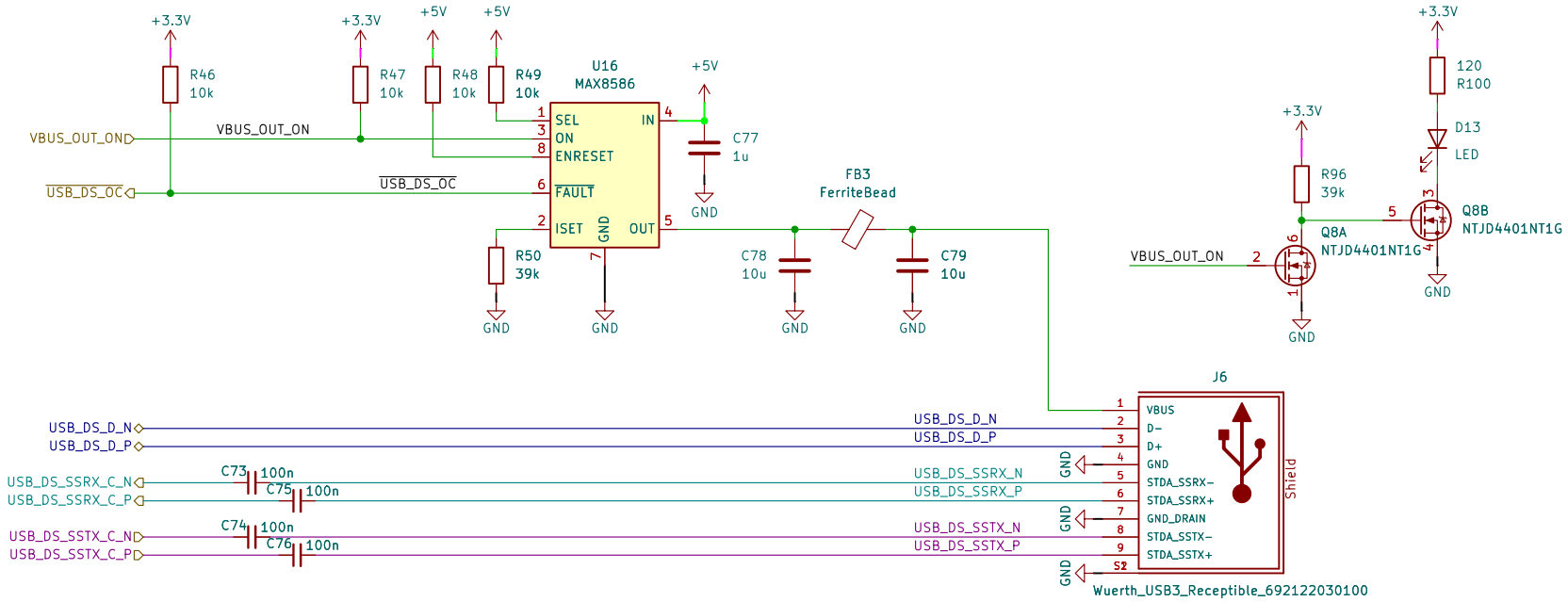

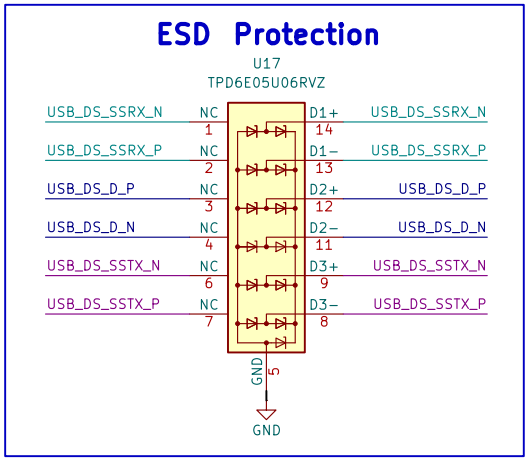

Sheet: /DOWNSTREAM_CONNECTORS2/
File: DOWNSTREAM_CONNECOTRS.kicad_sch

Title:

Size: A4	Date: 2026-02-20	Rev: Rev 1
KiCad E.D.A. 10.0.0-rc1.1		Id: 10/12

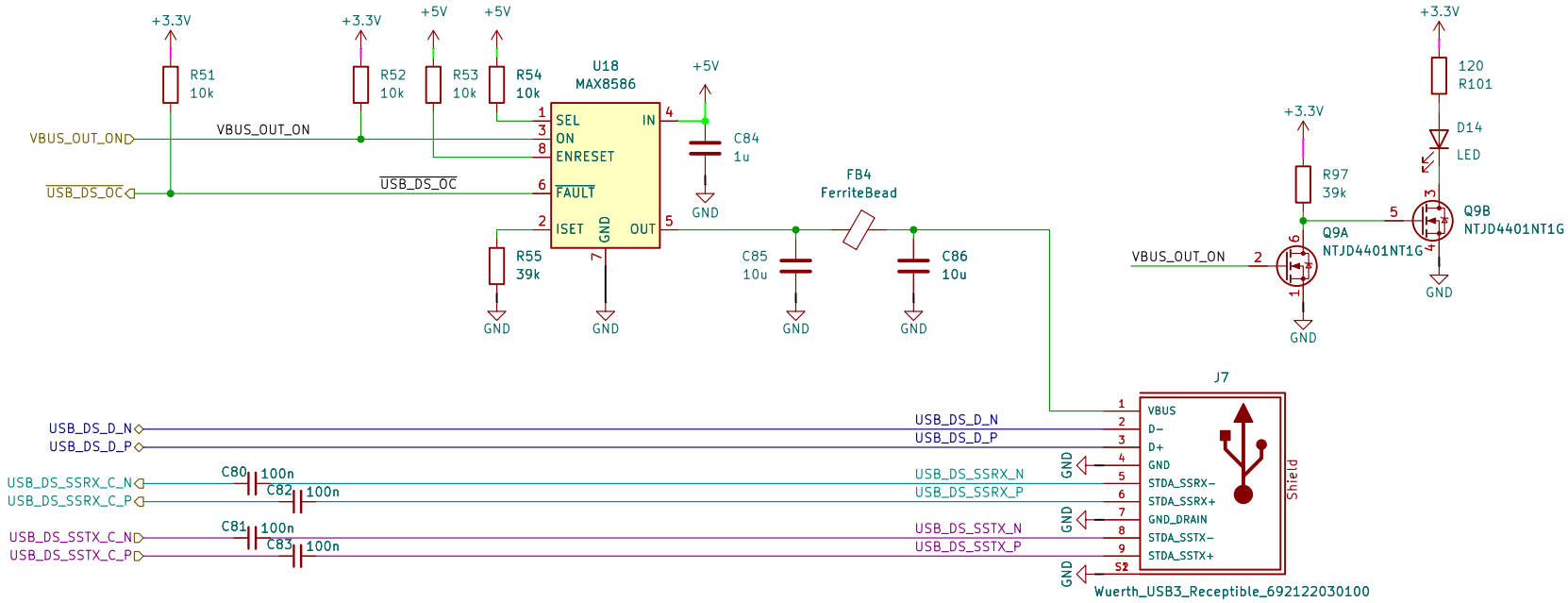

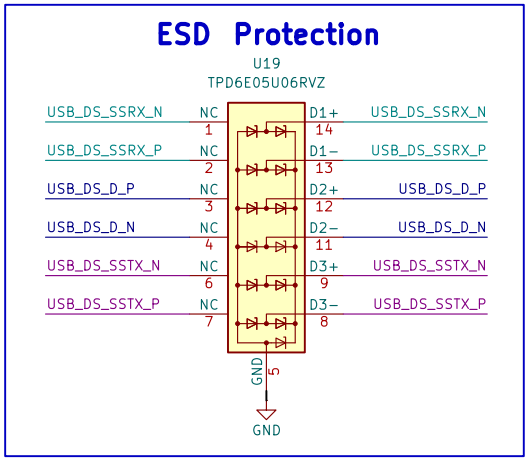

Sheet: /DOWNSTREAM_CONNECTORS3/
File: DOWNSTREAM_CONNECOTRS.kicad_sch

Title:

Size: A4	Date: 2026-02-20	Rev: Rev 1
KiCad E.D.A. 10.0.0-rc1.1		Id: 11/12

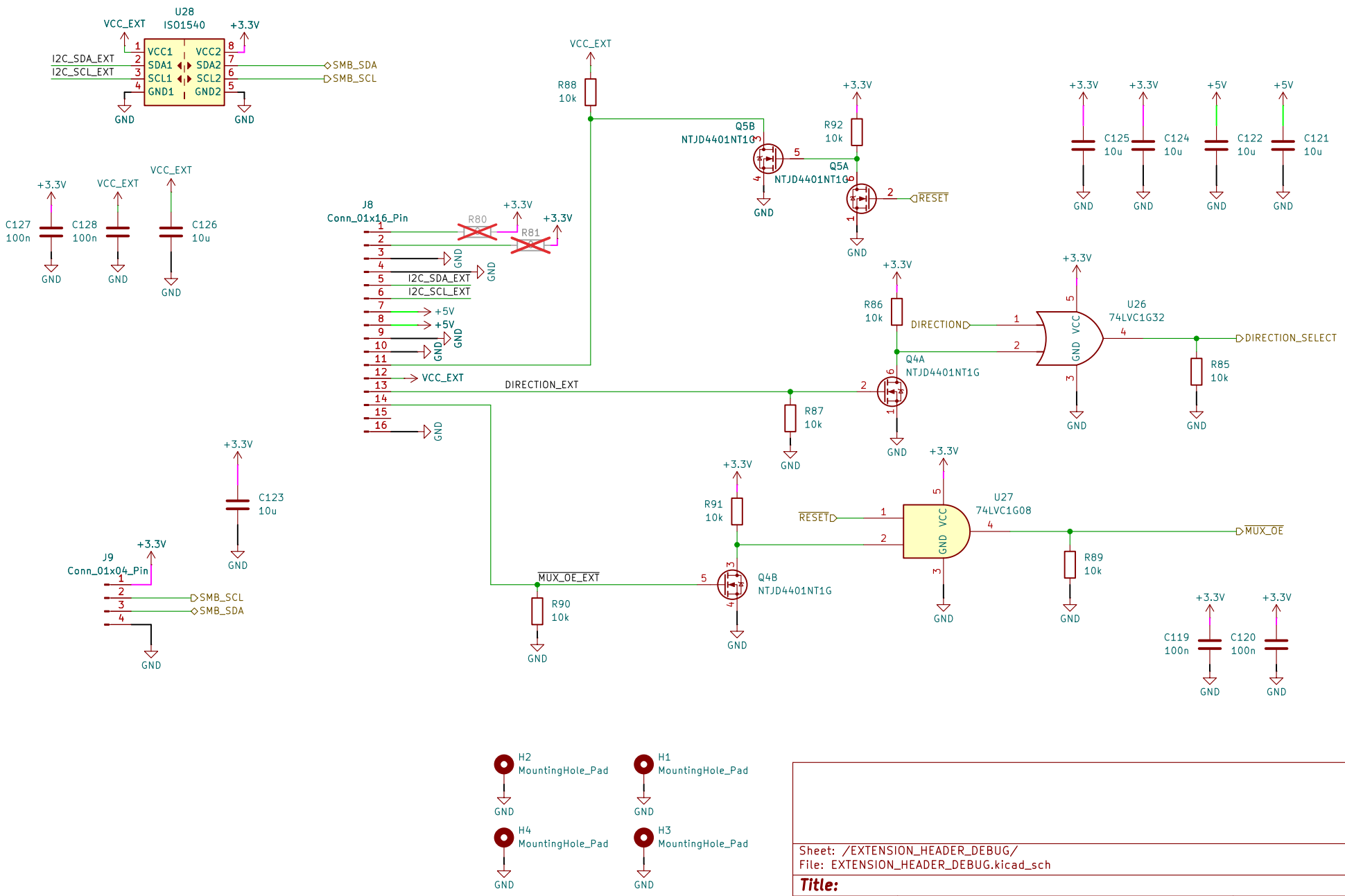

Sheet: /EXTENSION_HEADER_DEBUG/
File: EXTENSION_HEADER_DEBUG.kicad_sch

Title:

Size: A4	Date: 2026-02-20	Rev: Rev 1
KiCad E.D.A. 10.0.0-rc1.1		Id: 12/12