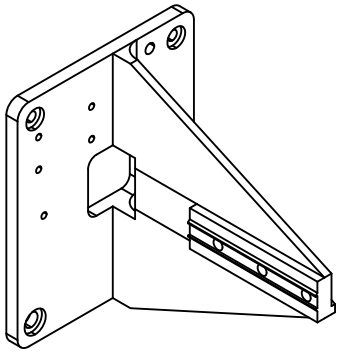

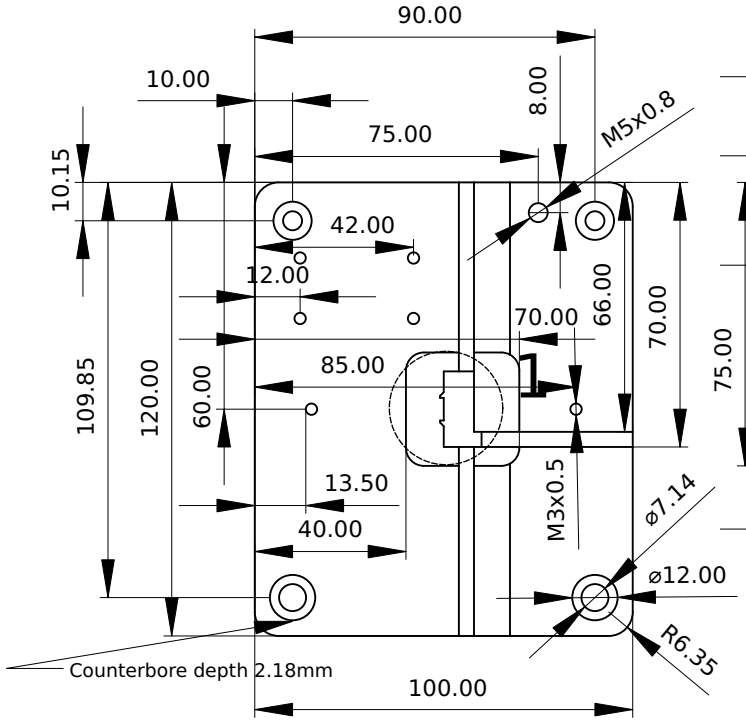

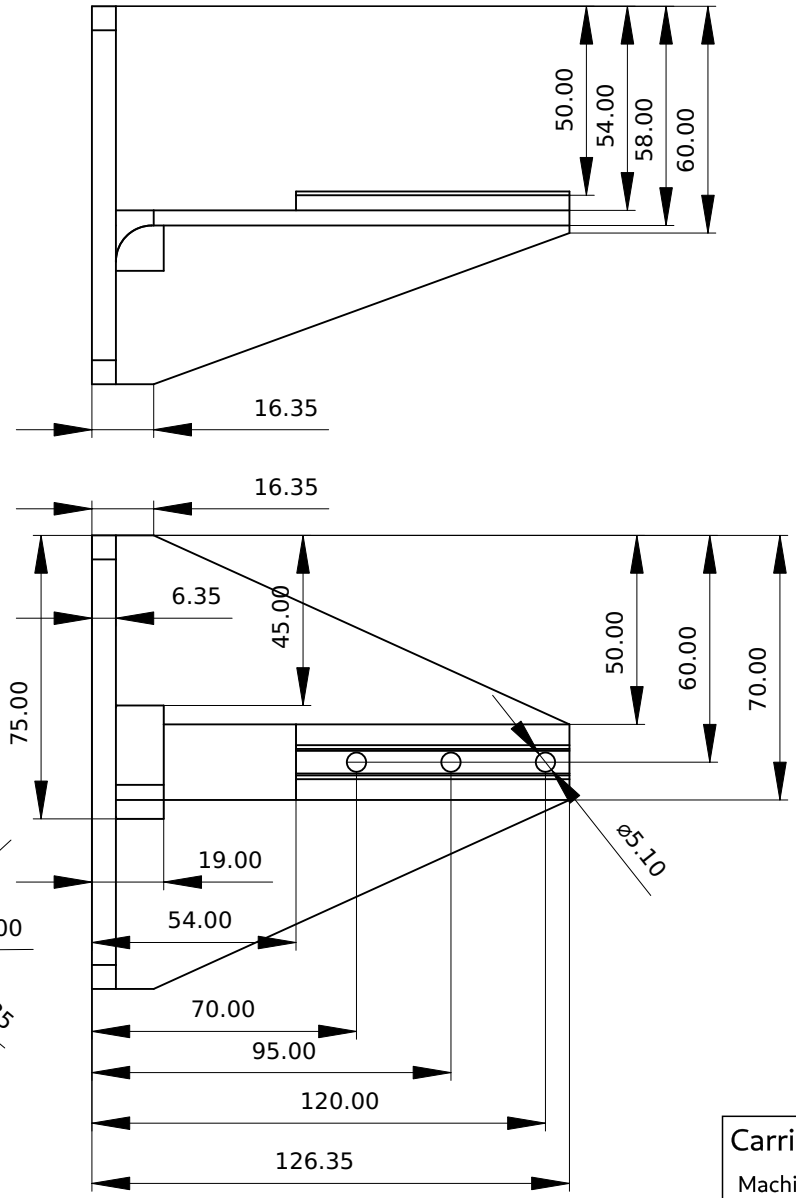

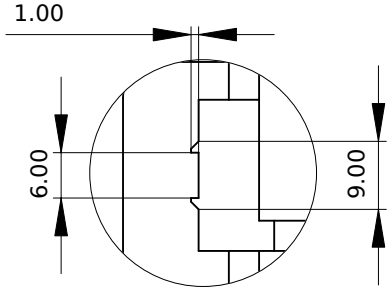

Carriage Block Machined from billet		
Author: Alex Neufeld		DWG #: 2020-111
Date: 25/05/2020	Scale: 1:2	Revision: 1