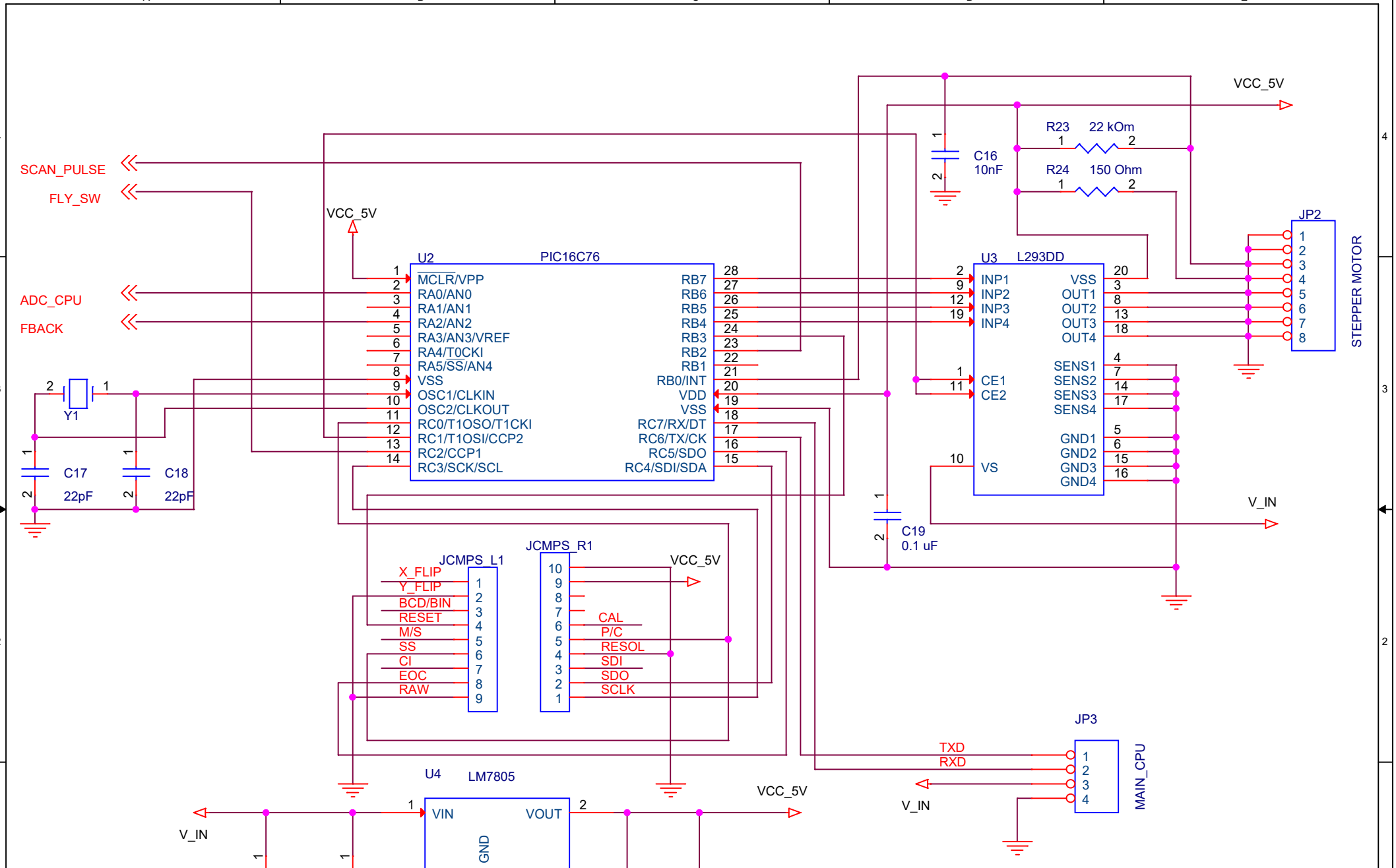

Title	CPU and step motor driver	
Size A	Document Number Designer Alexo, 1999-2000	Rev 1
Date: Friday, April 24, 2020	Sheet 4 of 4	