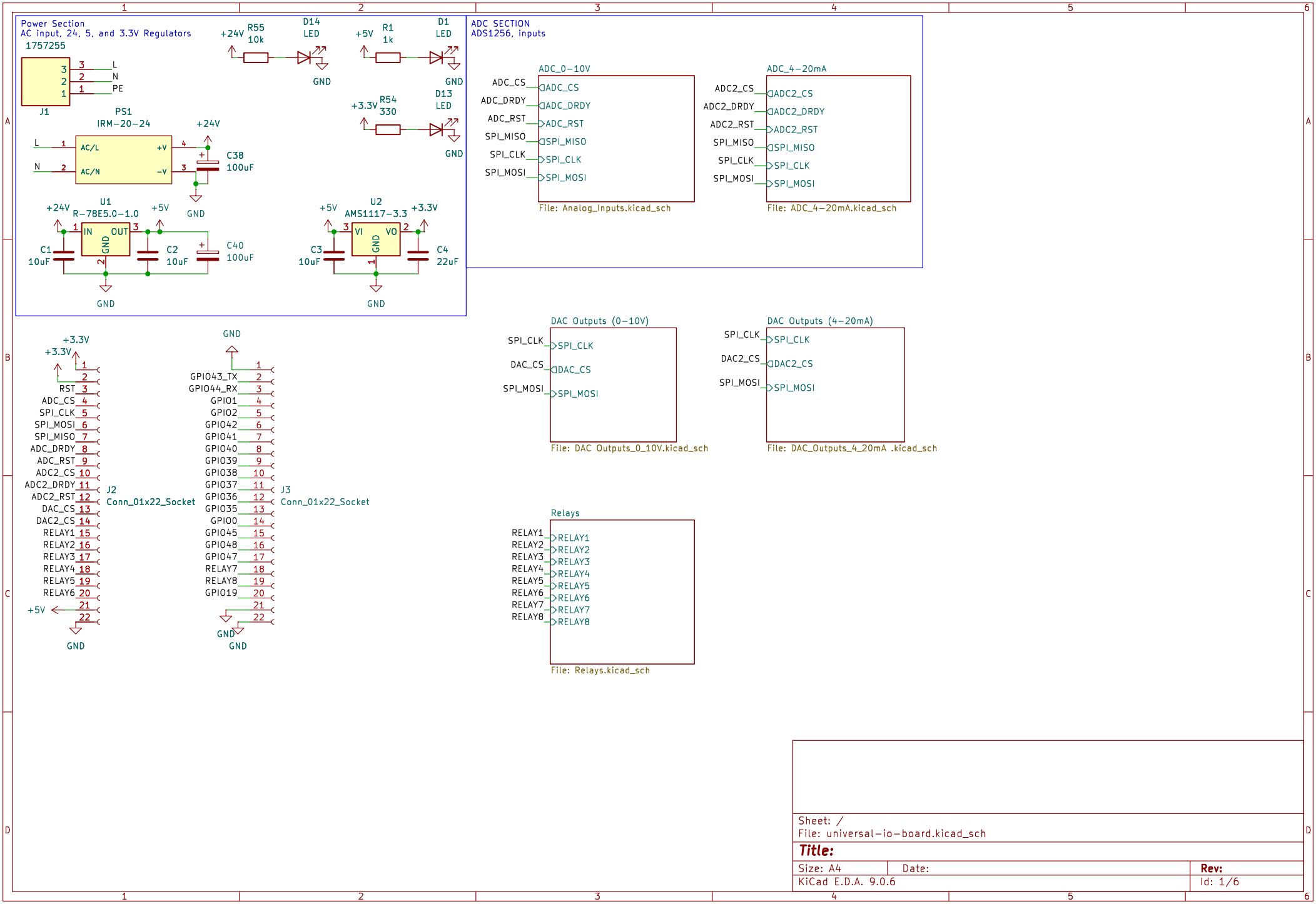

Sheet: /
File: universal-io-board.kicad_sch

Title:

Size: A4	Date:	Rev:
KiCad E.D.A. 9.0.6		Id: 1/6

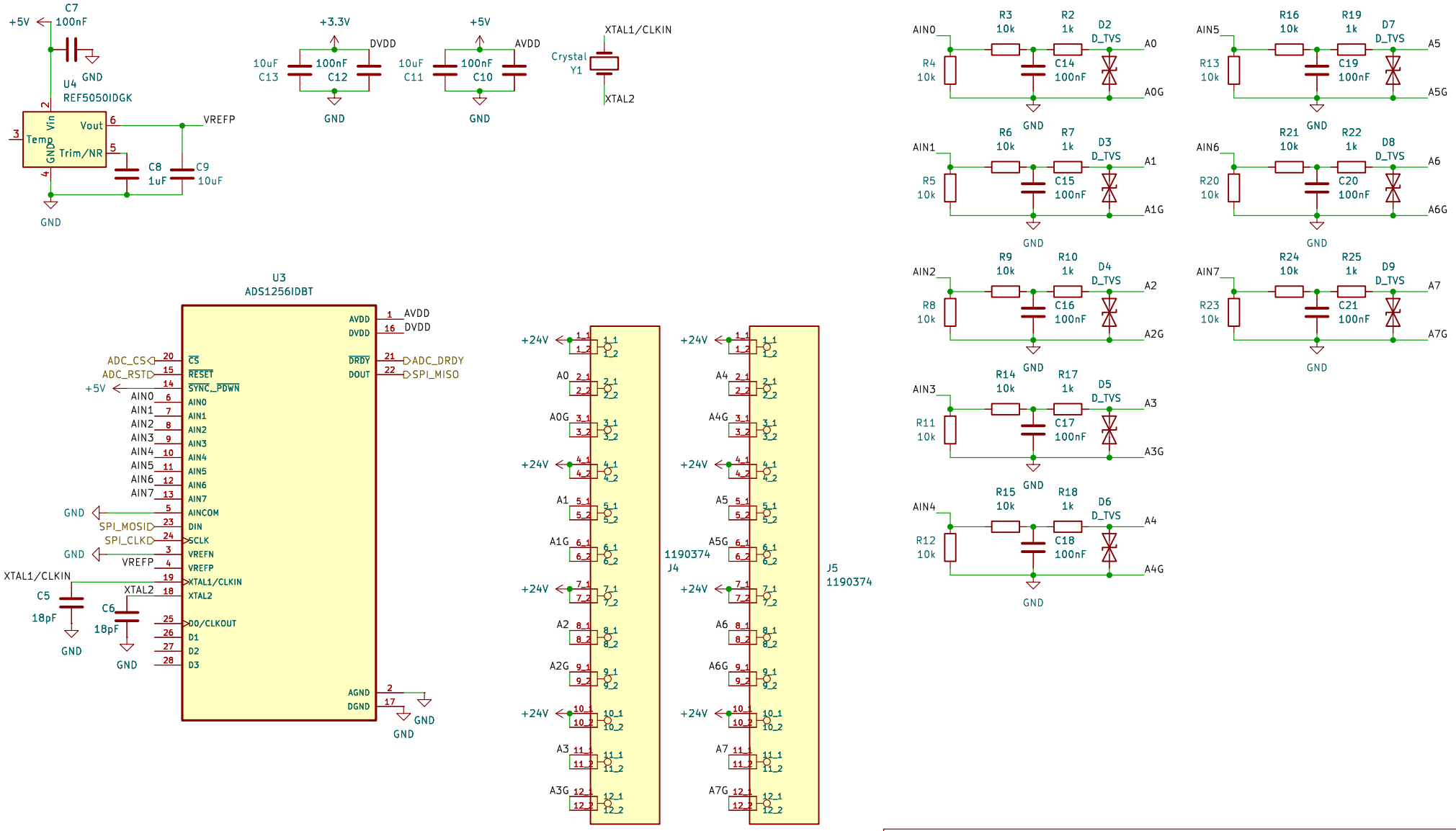

Sheet: /ADC_0-10V/
File: Analog_Inputs.kicad_sch

Title:

Size: A4	Date:	Rev:
KiCad E.D.A. 9.0.6		Id: 2/6

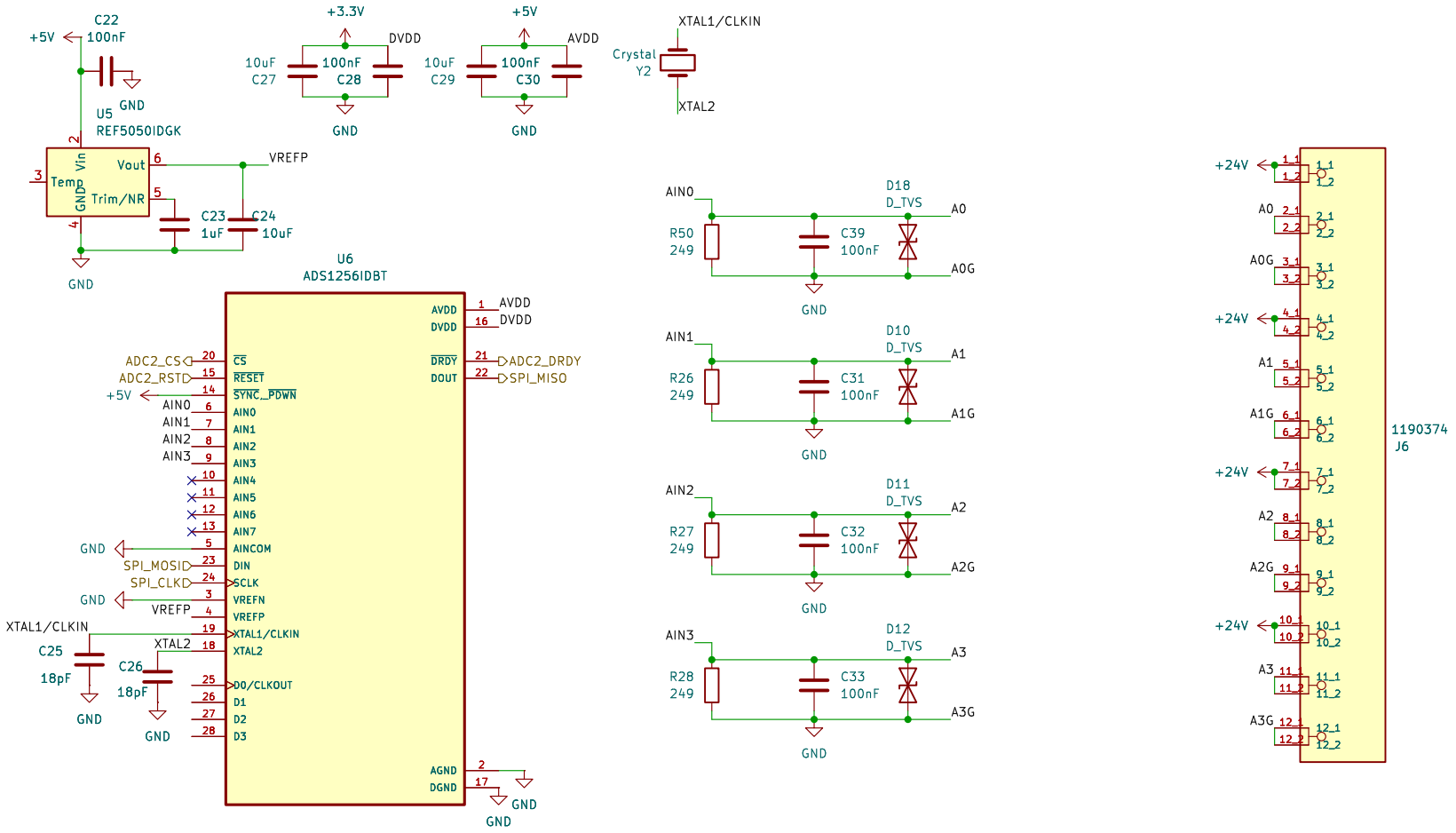

Sheet: /ADC_4-20mA/
File: ADC_4-20mA.kicad_sch

Title:

Size: A4	Date:	Rev:
KiCad E.D.A. 9.0.6		Id: 3/6

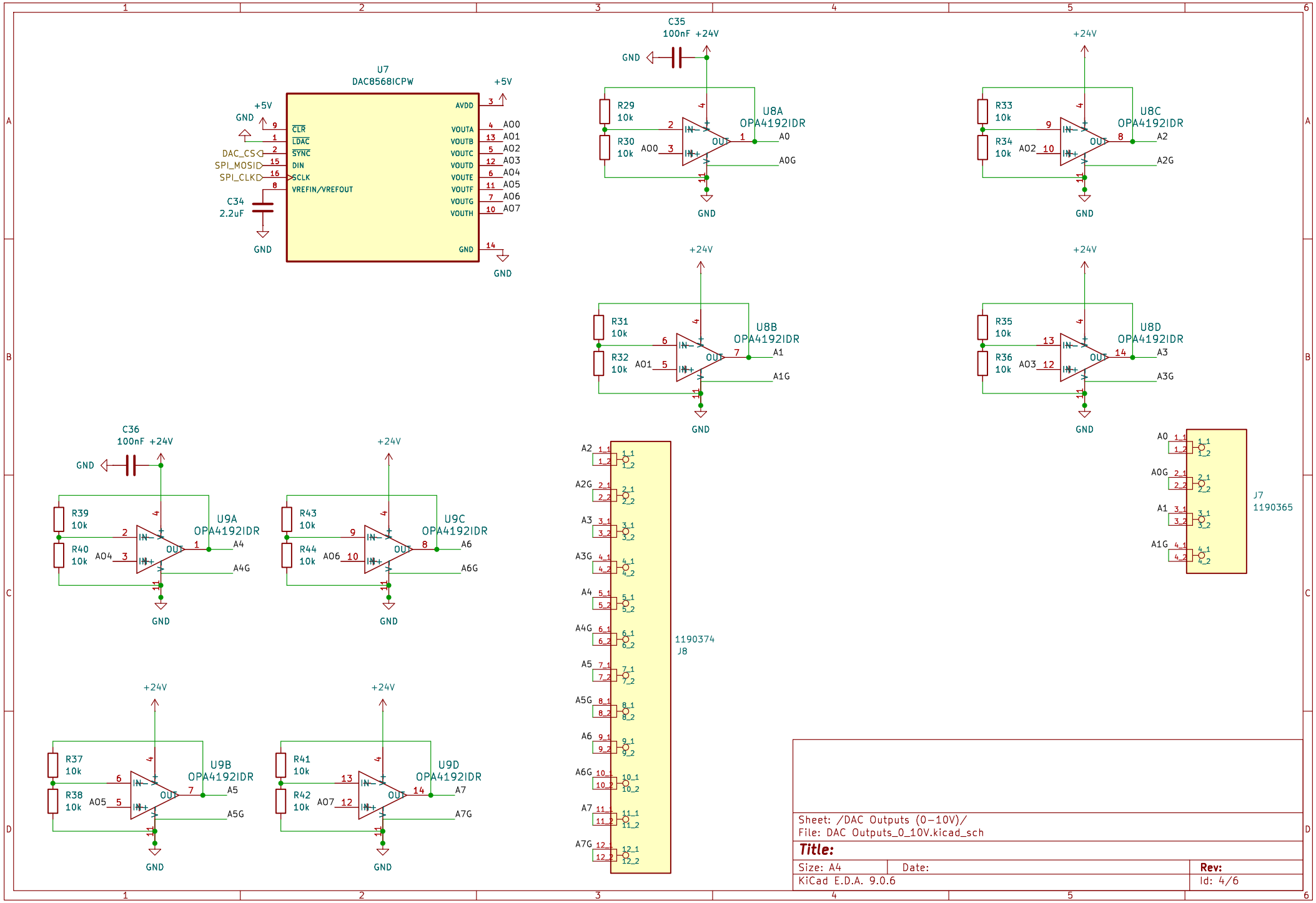
U7
DAC8568ICPW
+5V
GND
CLR
LDAC
SYNC
DIN
SCLK
VREFIN/VREFOUT
DAC_CS
SPI_MOSI
SPI_CLK
C34
2.2uF
AVDD
VOUTA
VOUTB
VOUTC
VOUTD
VOUTE
VOUTF
VOUTG
VOUTH
AO0
AO1
AO2
AO3
AO4
AO5
AO6
AO7
C35
100nF +24V
U8A
OPA4192IDR
R29
10k
R30
10k
A0
A0G
U8C
OPA4192IDR
R33
10k
R34
10k
A2
A2G
U8B
OPA4192IDR
R31
10k
R32
10k
A1
A1G
U8D
OPA4192IDR
R35
10k
R36
10k
A3
A3G
C36
100nF +24V
U9A
OPA4192IDR
R39
10k
R40
10k
A4
A4G
U9C
OPA4192IDR
R43
10k
R44
10k
A6
A6G
U9B
OPA4192IDR
R37
10k
R38
10k
A5
A5G
U9D
OPA4192IDR
R41
10k
R42
10k
A7
A7G
1190374
J8
J7
1190365
Sheet: /DAC Outputs (0-10V)/
File: DAC Outputs_0_10V.kicad_sch
Title:
Size: A4
Date:
Rev:
KiCad E.D.A. 9.0.6
Id: 4/6

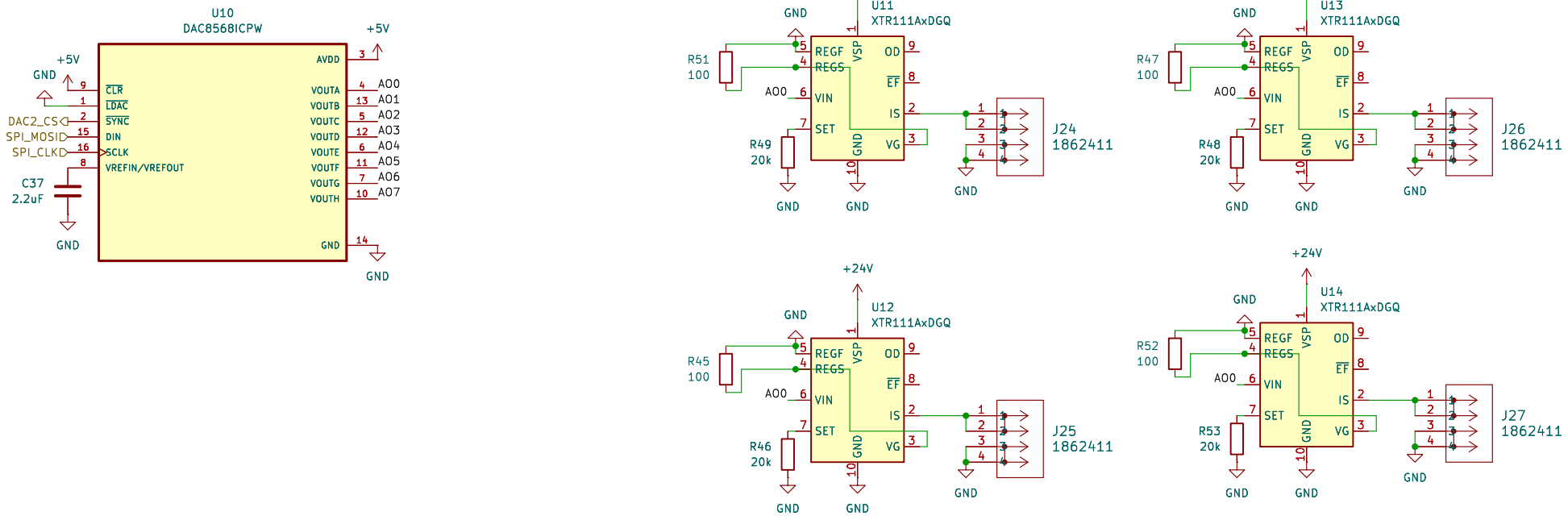

Sheet: /DAC Outputs (4–20mA)/
File: DAC_Outputs_4_20mA .kicad_sch

Title:

Size: A4	Date:	Rev:
KiCad E.D.A. 9.0.6		Id: 5/6

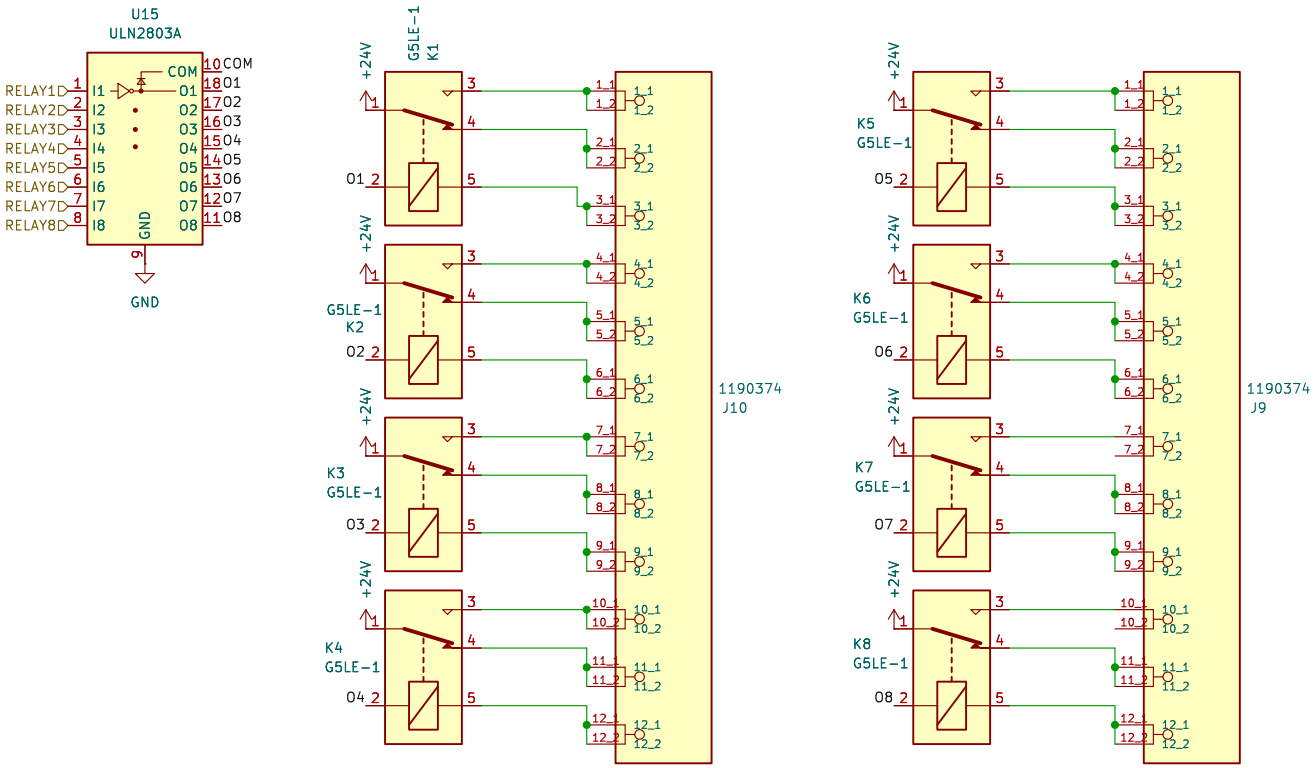

Sheet: /Relays/
File: Relays.kicad_sch

Title:

Size: A4	Date:	Rev:
KiCad E.D.A. 9.0.6		Id: 6/6