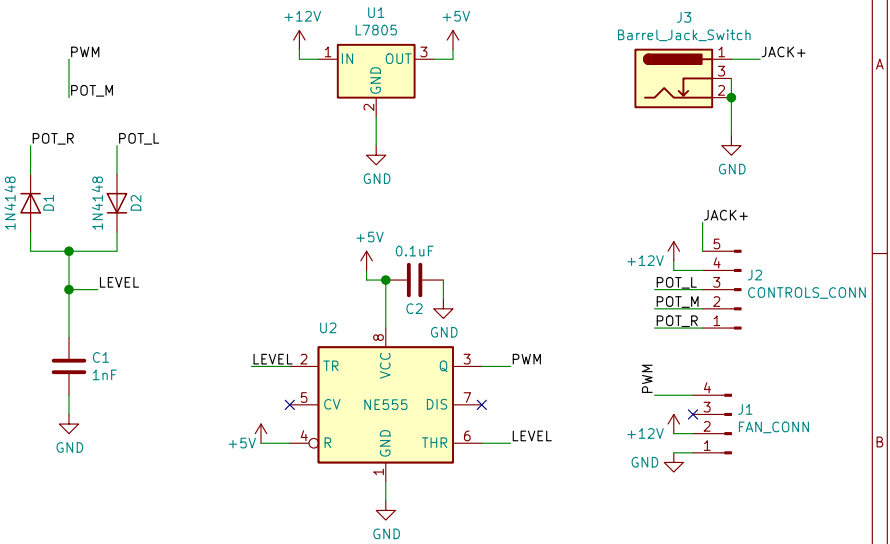

Sheet: /
File: fume_extractor_pcb.sch

Title: Cruddy 25Khz PWM Fan Controller

Size: User	Date:	Rev: 1.0
KiCad E.D.A. kicad (5.0.0)		Id: 1/1