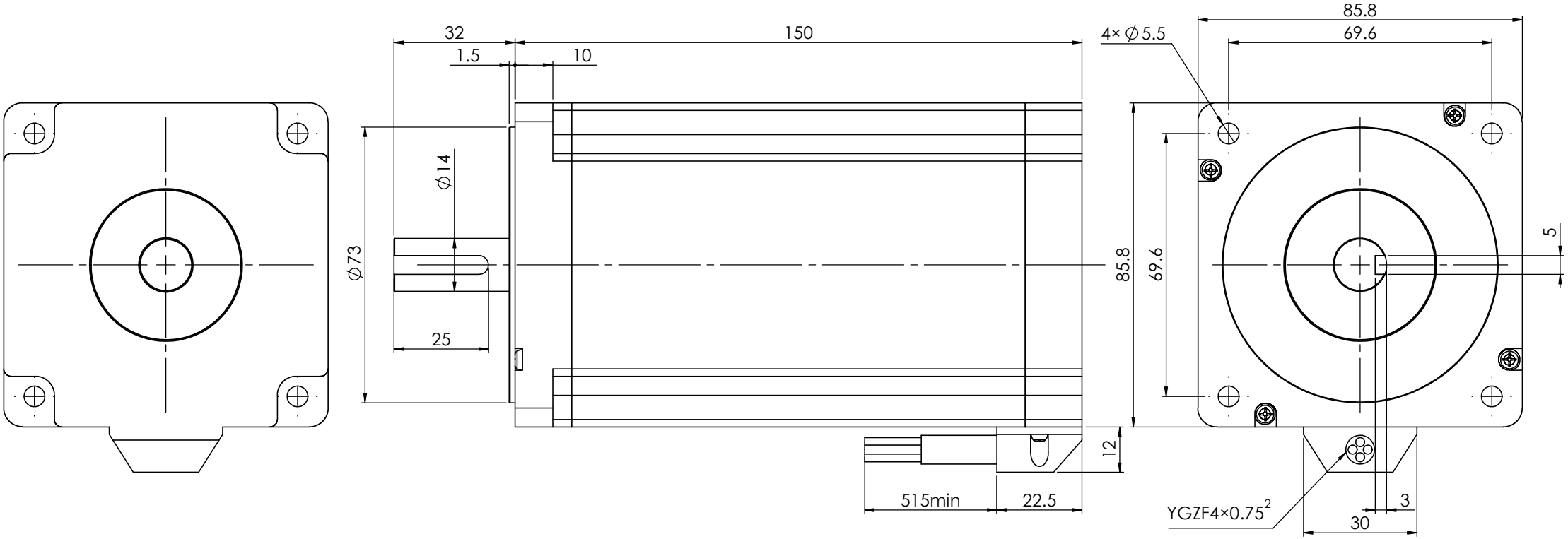
32
150
1.5
10
4× ∅5.5
85.8
69.6
∅14
∅73
25
85.8
69.6
5
12
515min
22.5
YGZF4×0.75²
3
30

C-86STM04