REVISIONS				
ZONE	REV	DESCRIPTION	DATE	APPROVED

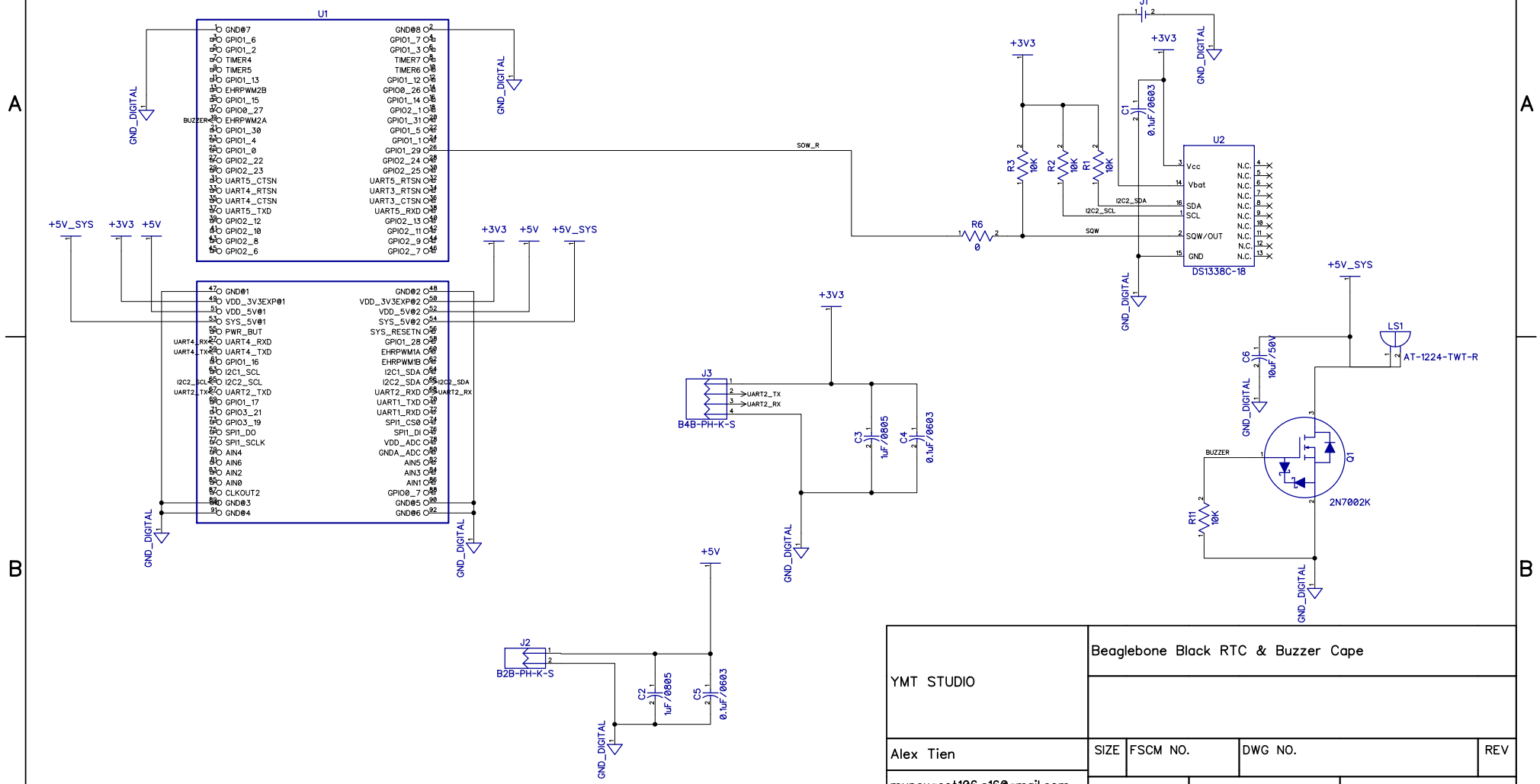

YMT STUDIO	Beaglebone Black RTC & Buzzer Cape			
Alex Tien	SIZE	FSCM NO.	DWG NO.	REV
mypeugeot106.s16@gmail.com	SCALE		Sheet 1	