PHYSICS ELEMENT OF CONTRUCT

ITEM	ELEMENT OF CONSTRACT	TOPICS COVERED	TERM	CLASS
SECTION A (COMPULSORY)				
Item one		Nature of light, reflection of light at plain surfaces	Term 3	Senior 0ne
		Reflection of light at curved surfaces	Term two	Senior two
		Refraction, Dispersion and Color	Term one	Senior three
		Lenses and optical instruments	Term two	Senior three
		General wave properties	Term two	Senior three
		Sound waves	Term two	Senior three
Item two	ATOMIC AND NUCLEAR PHYSICS	Atomic models	Term two	Senior four
		Nuclear processes	Term 3	Senior four
Item three	STARS, GALAXIES (Earth and space physics and digital electronics)	Solar system	Term three	Senior two
		Satellites and communication	Term three	Senior three
		Digital electronics	Term three	Senior four
SECTION B (PART ONE)				
Item four & five	MECHANICS AND HEAT	Measurements in physics	Term one	Senior one
		States of matter	Term two	Senior one
		Effects of forces	Term two	Senior one
		Work, Energy and power	Term one	Senior two
		Turning effects of forces, Center of gravity and stability	Term two	Senior two

		Pressure in solids and fluids	Term 2	Senior two
		Mechanical properties of materials and Hooks' Law	Term two	Senior two
		Linear and non-linear motion	Term one	Senior three
		Temperature and Measurement	Term two	Senior one
		Heat Transfer	Term two	Senior one
		Expansion of solids, liquids and gases	Term three	Senior one
		Heat quantity and vapour	Term three	Senior three
Item 6 & 7		Magnets and magnetic fields	Term three	Senior two
		Electromagnetic Effects	Term one	Senior four
		Electoral statics	Term three	Senior two
		Introduction to current and electricity	Term one	Senior four
		Voltage, Resistance and OHM'S law	Term one	Senior four
		Electric Energy distribution and consumption.	Term two	Senior four

20 Most Common UNEB O' Level Physics Questions

1. Calculate Speed

Example question:

A car travels **120 m in 10 s**.
Find the speed.

Formula used:

$$v = \frac{d}{t}$$

---

2. Acceleration Question

Example:

A car increases velocity from **10 m/s to 30 m/s in 5 s**.
Find the acceleration.

$$a = \frac{v - u}{t}$$

---

3. Distance Using Motion Equation

Example:

A body starts with velocity **5 m/s** and accelerates **2 m/s² for 4 s**.
Find the distance moved.

---

4. Define Newton's Second Law

Typical theory question:

State Newton's second law of motion.

Answer expected:

Force is proportional to the rate of change of momentum.

---

5. Calculate Force

Example:

A body of **5 kg** accelerates at **4 m/s²**.
Find the force.

$$F = ma$$

---

6. Difference Between Mass and Weight

Theory question.

Expected points:

Mass:

- amount of matter
- measured in kg

Weight:

- force due to gravity
- measured in Newtons

---

7. Calculate Density

Example:

Mass = **200 g**
Volume = **50 cm³**

Find density.

$$\rho = \frac{m}{V}$$

---

8. Pressure on Surface

Example:

A force of **100 N** acts on area **5 m²**.
Find pressure.

$$P = \frac{F}{A}$$

---

9. Liquid Pressure

Example:

Find pressure at **5 m depth in water**.

$$P = \rho g h$$

---

10. Work Done

Example:

A force of **20 N** moves a body **10 m**.

Find work done.

$$W = Fd$$

---

11. Power Question

Example:

A machine does **500 J work in 5 s**.

Find power.

$$P = \frac{W}{t}$$

---

12. Kinetic Energy

Example:

Mass = **2 kg**
Velocity = **4 m/s**

Find kinetic energy.

$$KE = \frac{1}{2}mv^2$$

---

13. Ohm's Law

Very common question.

Example:

Current = **2 A**
Resistance = **5 Ω**

Find voltage.

$$V = IR$$

Electricity questions appear in almost every physics exam.

---

14. Electric Power

Example:

Voltage = **240 V**
Current = **2 A**

Find electrical power.

$$P = VI$$

---

15. Charge and Current

Example:

A current of **3 A flows for 5 s**.
Find charge.

$$Q = It$$

---

16. Wave Speed

Example:

Frequency = **500 Hz**
Wavelength = **0.6 m**

Find wave speed.

$$v = f\lambda$$

Waves are one of the **most frequently tested physics topics**.

---

17. Define Reflection of Light

Typical theory question.

Answer expected:

Reflection is the bouncing back of light from a surface.

---

18. Ray Diagram of Convex Lens

Typical question:

Draw ray diagram showing **image formation by convex lens**.

---

19. Momentum Question

Example:

Mass = **2 kg**
Velocity = **3 m/s**

Find momentum.

$$p = mv$$

---

20. Heat Energy Question

Example:

Mass = **2 kg**
Specific heat capacity = **4200 J/kg°C**
Temperature change = **5°C**

Find heat energy.

$$Q = mc\Delta T$$

The 8 Topics That Almost Always Come in UNEB Physics

If you revise these, you can answer **about 70–80% of the paper**:

1. Motion (speed, acceleration)
2. Forces
3. Work, energy, power
4. Density & pressure
5. Electricity
6. Waves
7. Light (lenses & mirrors)
8. Heat

These topics appear frequently in many physics exams because they are **core concepts of the syllabus**.

✅ **Pro tip used by top students:**
Solve **at least 10 years of UNEB past papers** because exam questions often repeat with slightly different numbers.

1️⃣ **The 10 Physics Numerical Problems UNEB Repeats Almost Every Year**

These questions appear almost every year with **different numbers but the same method**.

---

1. Speed Calculation

v = \frac{d}{t}

Typical question:

A car travels **200 m in 20 s**.
Find the speed.

---

2. Acceleration

$$a = \frac{v - u}{t}$$

Typical question:

Velocity changes from **10 m/s to 30 m/s in 5 s**.
Find acceleration.

---

3. Force

$$F = ma$$

Typical question:

A body of **4 kg** accelerates at **3 m/s²**.
Find the force.

---

4. Pressure

$$P = \frac{F}{A}$$

Typical question:

A force of **200 N** acts on area **5 m²**.
Find pressure.

---

5. Density

$$\rho = \frac{m}{V}$$

Typical question:

Mass = **500 g**
Volume = **100 cm³**

Find density.

---

6. Work Done

$$W = Fd$$

Typical question:

A force of **10 N** moves a body **5 m**.

---

7. Kinetic Energy

$$KE = \frac{1}{2}mv^2$$

Typical question:

Mass = **2 kg**
Velocity = **6 m/s**

---

8. Ohm's Law

$$V = IR$$

Typical question:

Current = **2 A**
Resistance = **4 Ω**

Find voltage.

---

9. Wave Speed

$$v = f\lambda$$

Typical question:

Frequency = **400 Hz**
Wavelength = **0.5 m**

Find wave speed.

---

10. Heat Energy

$$Q = mc\Delta T$$

Typical question:

Mass = **2 kg**
Specific heat capacity = **4200 J/kg°C**
Temperature change = **5°C**

2️⃣ A 30-Day Plan to Master O-Level Physics

This plan is used by many high-performing students.

Week 1 — Foundations

Focus: **Understanding concepts**

Topics:

Day 1–2
Motion (speed, velocity, acceleration)

Day 3
Forces & Newton's laws

Day 4
Work, energy, power

Day 5
Density & pressure

Day 6
Heat

Day 7
Solve past paper questions.

Week 2 — Electricity

Day 8–9
Current, voltage, resistance

Day 10
Ohm's Law

Day 11
Electric power

Day 12
Electric circuits

Day 13
Electrical energy

Day 14
Past paper practice.

Week 3 — Waves & Light

Day 15
Wave properties

Day 16
Wave speed

Day 17
Reflection

Day 18
Refraction

Day 19
Lenses & mirrors

Day 20–21
Past paper practice.

Week 4 — Mastery

Day 22–25
Solve **10 years of past papers**

Day 26–27
Revise formulas and laws

Day 28
Practice calculations

Day 29
Do full physics mock exam

Day 30
Final revision.

3️⃣ UNEB Physics Paper 1 Secrets (How Students Score 40/40)

Paper 1 is **multiple choice**.

Top students use these strategies.

Secret 1 — Memorize Formulas

About **60% of MCQs use formulas**.

Most important formulas:

- Speed
- Force

- Pressure
- Density
- Ohm’s law
- Wave speed

Secret 2 — Eliminate Wrong Answers

Example:

Question gives options:

A) 2
B) 10
C) 50
D) 200

Often **two answers are impossible**.

Remove them quickly.

Secret 3 — Use Unit Clues

Units reveal the answer.

Example:

If question asks **pressure**, answer must be **Pa or N/m^2**.

Secret 4 — Watch for Trick Words

Words like:

- ALWAYS
- NEVER
- ONLY

are often **wrong in physics MCQs**.

Secret 5 — Draw Diagrams

For questions about:

- lenses
- mirrors
- waves

Draw quick sketches.

The 5 Topics That Produce Most Physics Marks

According to many past papers from the Uganda National Examinations Board, these topics dominate exams:

1️⃣ Electricity
2️⃣ Motion
3️⃣ Forces
4️⃣ Waves
5️⃣ Heat

If you master these, you can answer **70–80% of the paper**.

1️⃣ **The 15 Physics Diagrams UNEB Repeats Every Year**

1. Convex Lens Ray Diagram

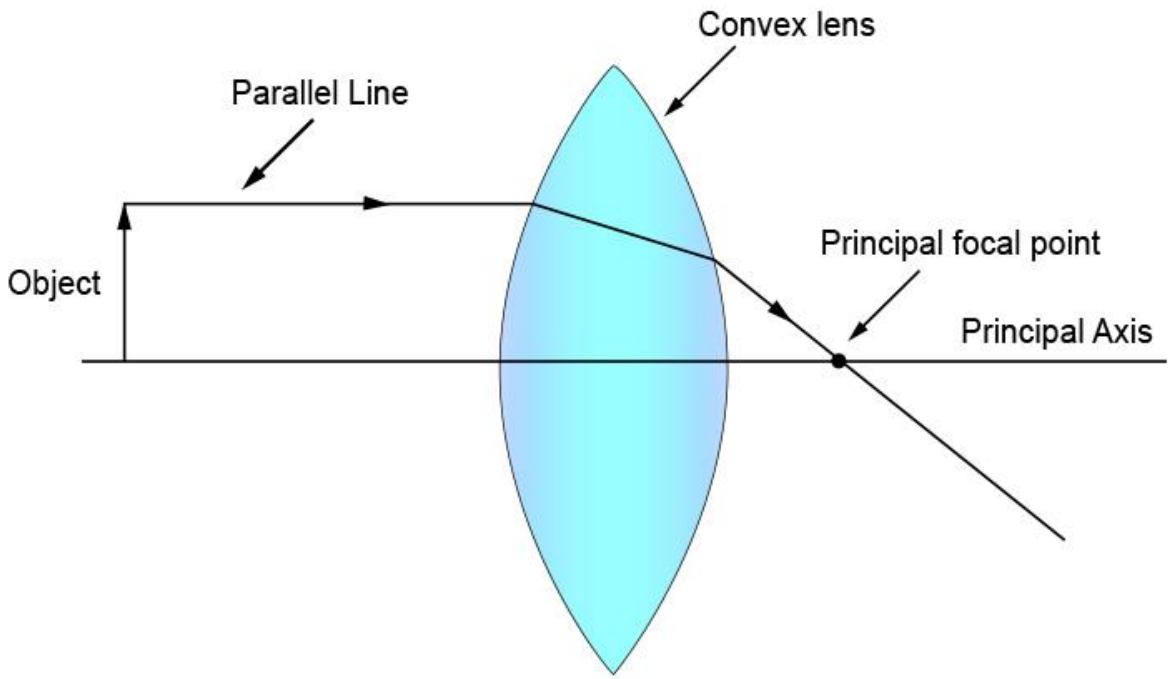
Convex lens
Parallel Line
Object
Principal focal point
Principal Axis

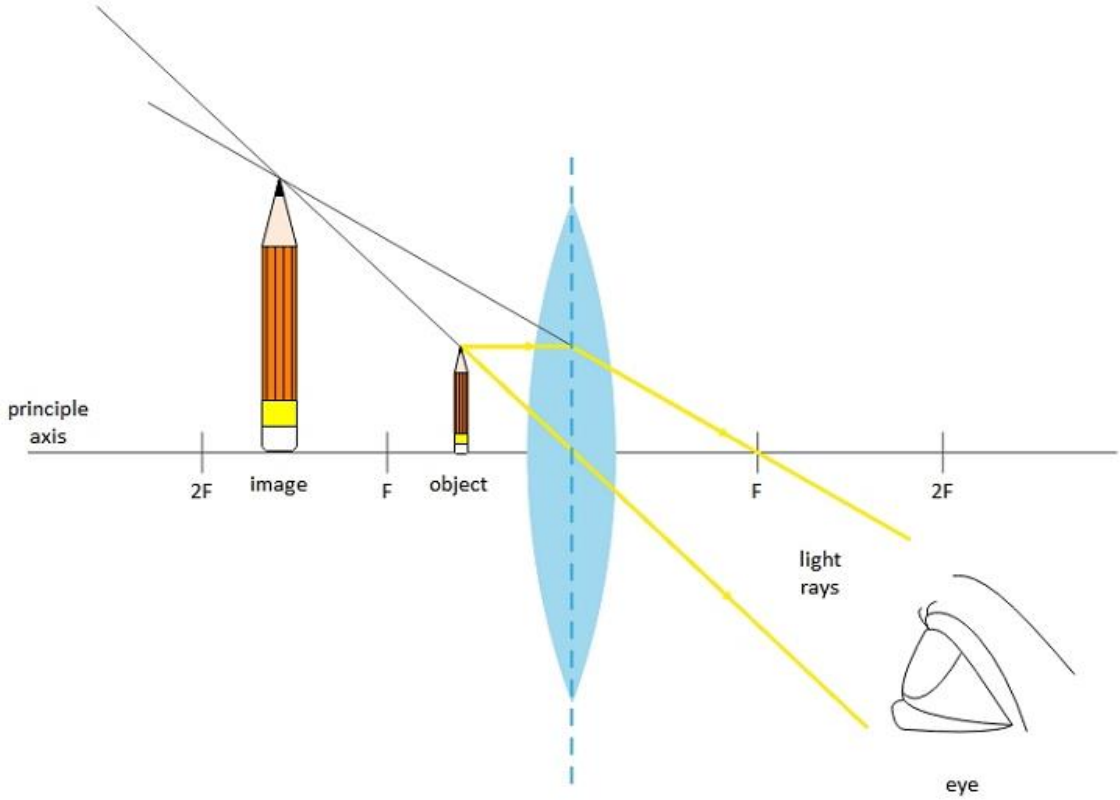
principle
axis
2F
image
F
object
F
2F
light
rays
eye

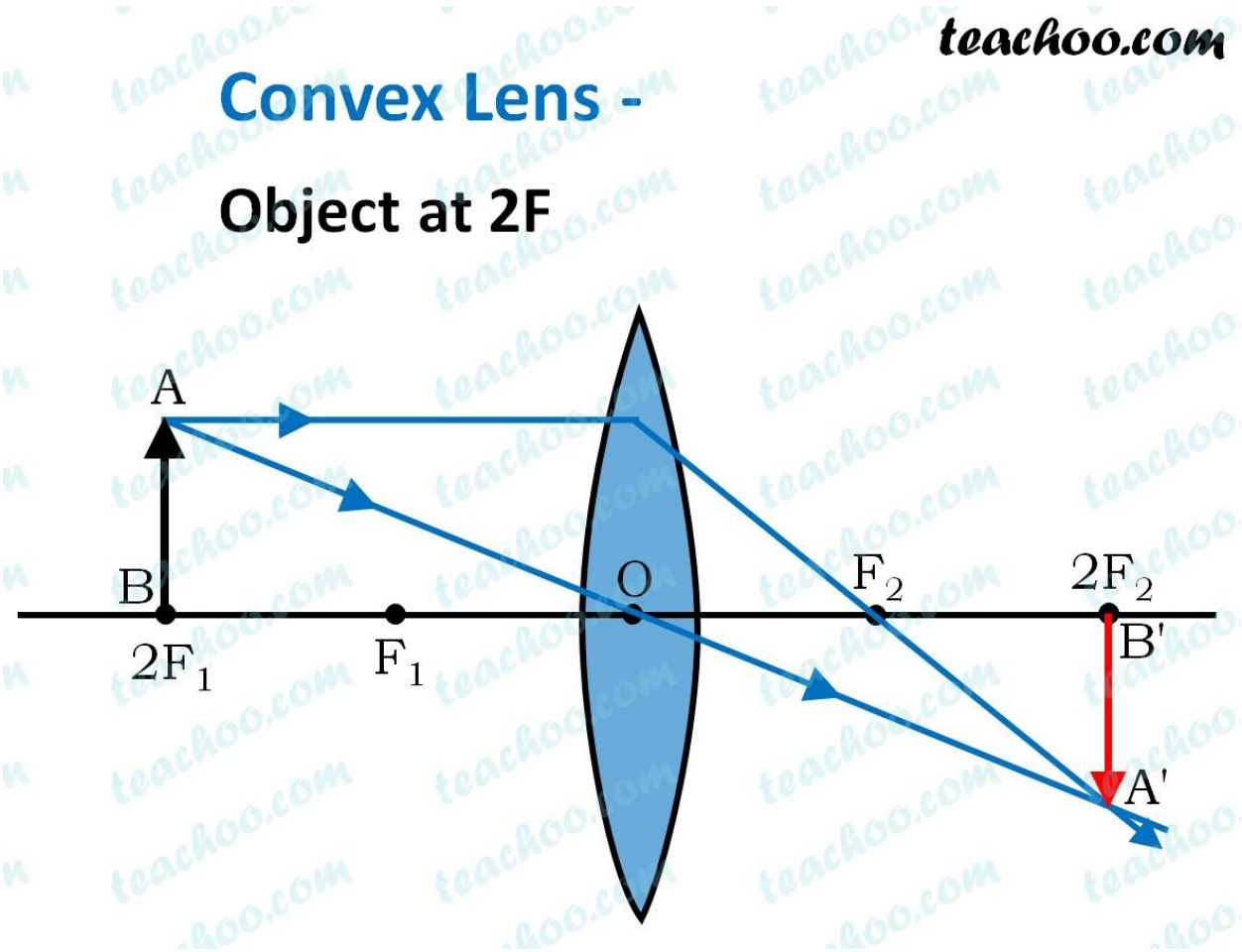

You must know how to draw:

- Principal axis
- Optical centre
- Focal point (F)
- Object
- Image

Typical exam question:

Draw a ray diagram to show image formation by a convex lens when the object is at **2F**.

The image formed is:

- Real
- Inverted

- Same size as object

---

2. Simple Electric Circuit

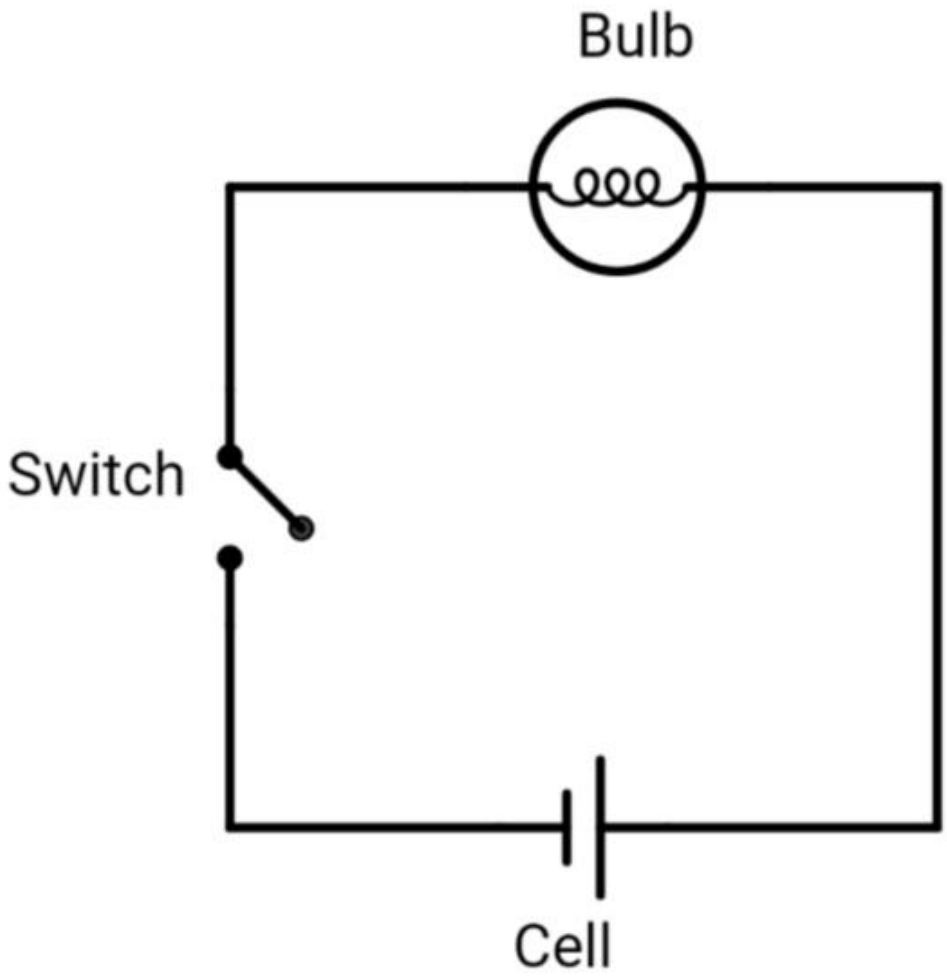

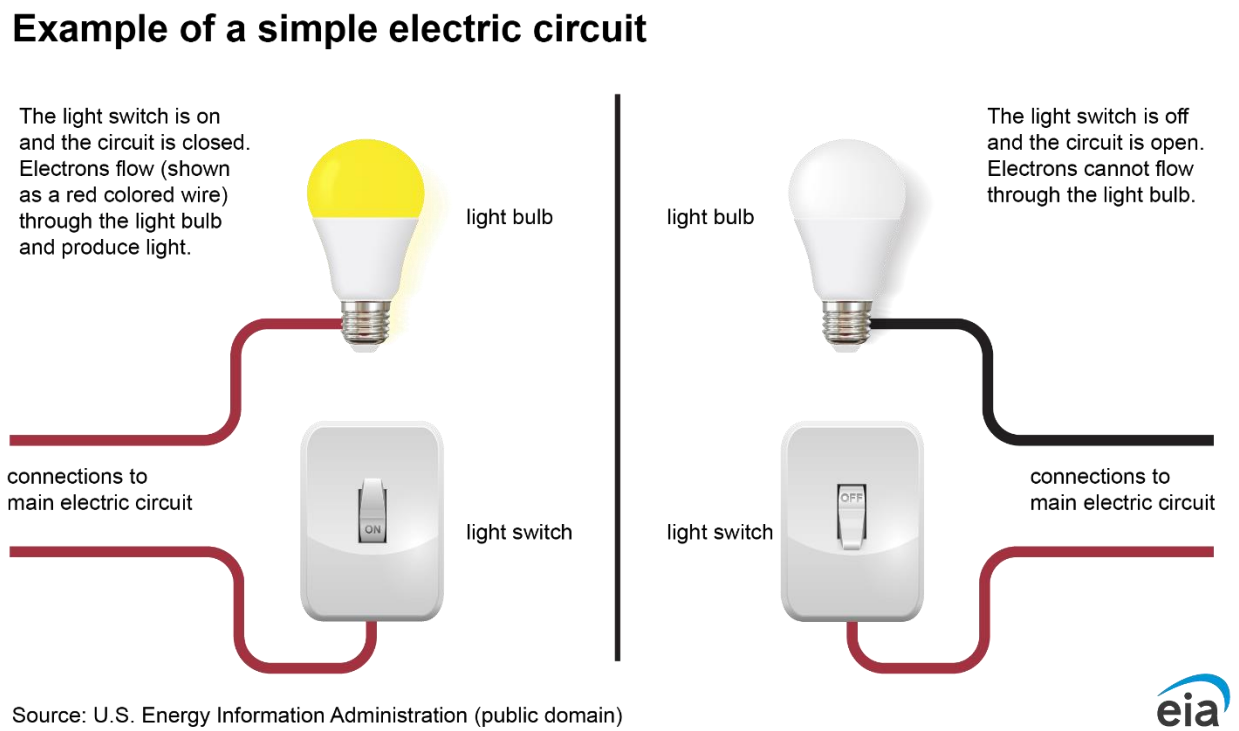

You must label:

- Cell
- Switch
- Bulb
- Connecting wires

Typical question:

Draw a simple circuit showing a **cell, switch and lamp**.

---

3. Refraction of Light Diagram

You should be able to draw:

- Incident ray
- Refracted ray
- Normal
- Boundary between media

Usually shown when light moves **air → glass or water**.

---

4. Reflection of Light Diagram

Must label:

- Incident ray
- Reflected ray
- Normal
- Angle of incidence
- Angle of reflection

---

5. Magnetic Field Around a Bar Magnet

Draw:

- Bar magnet
- Field lines from **North → South**

---

6. Magnetic Field Around Current-Carrying Wire

Show:

- Circular magnetic field lines around the wire.

---

7. Electric Motor Diagram

Label:

- Coil
- Magnet
- Split ring commutator
- Brushes
- Battery

---

8. Transformer Diagram

Label:

- Primary coil
- Secondary coil
- Iron core

---

9. Lever (Principle of Moments)

Label:

- Effort
- Load
- Fulcrum

---

10. Pressure in Liquid

Diagram shows:

- Liquid in container
- Pressure increasing with depth

---

11. Wave Diagram

Label:

- Crest
- Trough
- Wavelength
- Amplitude

---

12. Transverse vs Longitudinal Waves

Examples:

- Light waves
- Sound waves

---

13. Image Formation by Plane Mirror

Must show:

- Object
- Mirror
- Virtual image
- Equal distance

---

14. Concave Mirror Ray Diagram

Used in:

- Torches
- Headlights

---

15. Total Internal Reflection

Label:

- Critical angle
- Incident ray
- Reflected ray

2️⃣ The 12 Physics Experiments Every Student Must Know

These experiments are **very common in physics practicals**.

---

1. Verification of Ohm's Law

Aim:

Show that current is proportional to voltage.

Apparatus:

- Ammeter
- Voltmeter
- Resistor
- Battery

Formula:

$$V = IR$$

---

2. Determine Density of a Solid

Steps:

1. Measure mass using a balance.
2. Measure volume using water displacement.
3. Calculate density.

---

3. Determine Density of a Liquid

Use:

- Measuring cylinder
- Balance

---

4. Determine Focal Length of a Convex Lens

Method:

Focus sunlight on paper until a **sharp image forms**.

Measure distance from lens to image.

---

5. Investigate Extension of a Spring

Used to verify **Hooke's Law**.

Measure extension when different masses are added.

---

6. Investigate Pressure in Liquids

Show that pressure increases with depth.

---

7. Determine Specific Heat Capacity

Heat water and measure temperature change.

Formula:

$$Q = mc\Delta T$$

---

8. Investigate Reflection of Light

Verify:

Angle of incidence = Angle of reflection.

---

9. Investigate Refraction of Light

Measure:

- Angle of incidence
- Angle of refraction

---

10. Demonstrate Magnetic Field

Use:

- Iron filings

- Bar magnet

---

11. Construct a Simple Electric Circuit

Show how current flows through:

- Cell
- Switch
- Bulb

---

12. Wave Experiment (Ripple Tank)

Shows:

- Reflection
- Refraction
- Diffraction of waves.

The 5 Experiments That Appear Most

Focus on these first:

1 Ohm's Law
2 Density determination
3 Convex lens focal length
4 Hooke's law
5 Reflection of light

These appear very frequently in practical exams set by the Uganda National Examinations Board.

50 Likely O-Level Physics Questions

---

1. Motion (Kinematics)

1. Define **speed**.

2. Distinguish between **speed and velocity**.
3. Define **acceleration**.
4. A car travels 150 m in 10 s. Calculate its speed.
5. A body accelerates from 5 m/s to 20 m/s in 5 s. Find the acceleration.
6. Sketch a **distance–time graph** for uniform motion.
7. Sketch a **velocity–time graph** for constant acceleration.

---

2. Forces

8. State **Newton's First Law of Motion**.
9. State **Newton's Second Law of Motion**.
10. State **Newton's Third Law of Motion**.
11. A body of mass 5 kg accelerates at 3 m/s^2. Calculate the force acting on it.
12. Define **inertia**.
13. State two **examples of inertia in daily life**.

---

3. Work, Energy and Power

14. Define **work**.
15. Define **energy**.
16. Define **power**.
17. A force of 20 N moves an object through 5 m. Calculate the work done.
18. A machine does 600 J of work in 3 s. Calculate the power.
19. State the **law of conservation of energy**.

---

4. Pressure and Density

20. Define **pressure**.
21. Calculate the pressure when a force of 100 N acts on an area of 5 m^2.

22. Define **density**.

23. A body has mass 400 g and volume 200 cm^3. Find its density.

24. State **Archimedes' Principle**.

25. State the **law of flotation**.

---

5. Heat (Thermal Physics)

26. Define **temperature**.

27. Define **heat**.

28. Define **specific heat capacity**.

29. State two **methods of heat transfer**.

30. Explain **conduction, convection, and radiation**.

---

6. Waves

31. Define **wave**.

32. Define **frequency**.

33. Define **wavelength**.

34. State the **relationship between wave speed, frequency, and wavelength**.

35. Give two **examples of transverse waves**.

36. Give two **examples of longitudinal waves**.

---

7. Light

37. State the **laws of reflection of light**.

38. Define **refraction of light**.

39. Draw a **ray diagram for a convex lens**.

40. Define **total internal reflection**.

---

8. Electricity

41. Define **electric current**.
42. Define **potential difference (voltage)**.
43. Define **resistance**.
44. State **Ohm's Law**.
45. A current of 2 A flows through a resistor of 5 Ω. Find the voltage.
46. Calculate electrical power when voltage is 240 V and current is 2 A.

---

9. Magnetism

47. Define a **magnetic field**.
48. State two **properties of magnets**.
49. Draw **magnetic field lines around a bar magnet**.

---

10. Practical Physics

50. Describe an experiment to **verify Ohm's Law**.

The 10 Questions That Appear the Most

If you are short on time, master these:

1. Speed calculations
2. Newton's laws
3. Force calculations
4. Density calculations
5. Pressure calculations
6. Work and power
7. Wave speed
8. Ohm's law

9. Convex lens ray diagram
10. Archimedes' principle

These alone can cover **a very large portion of the marks**.