PD240	BK80	B80	M10x130	10x80	M10 Nut	6x90
2400x68x68mm	800x68x44mm	800x140x18mm	M10X130mm	10x80mm	M10	6x90mm
11x	3x	1x	2x	4x	2x	6x

4,5x50	Cap
4,5x50mm	
4x	6x

1

2x

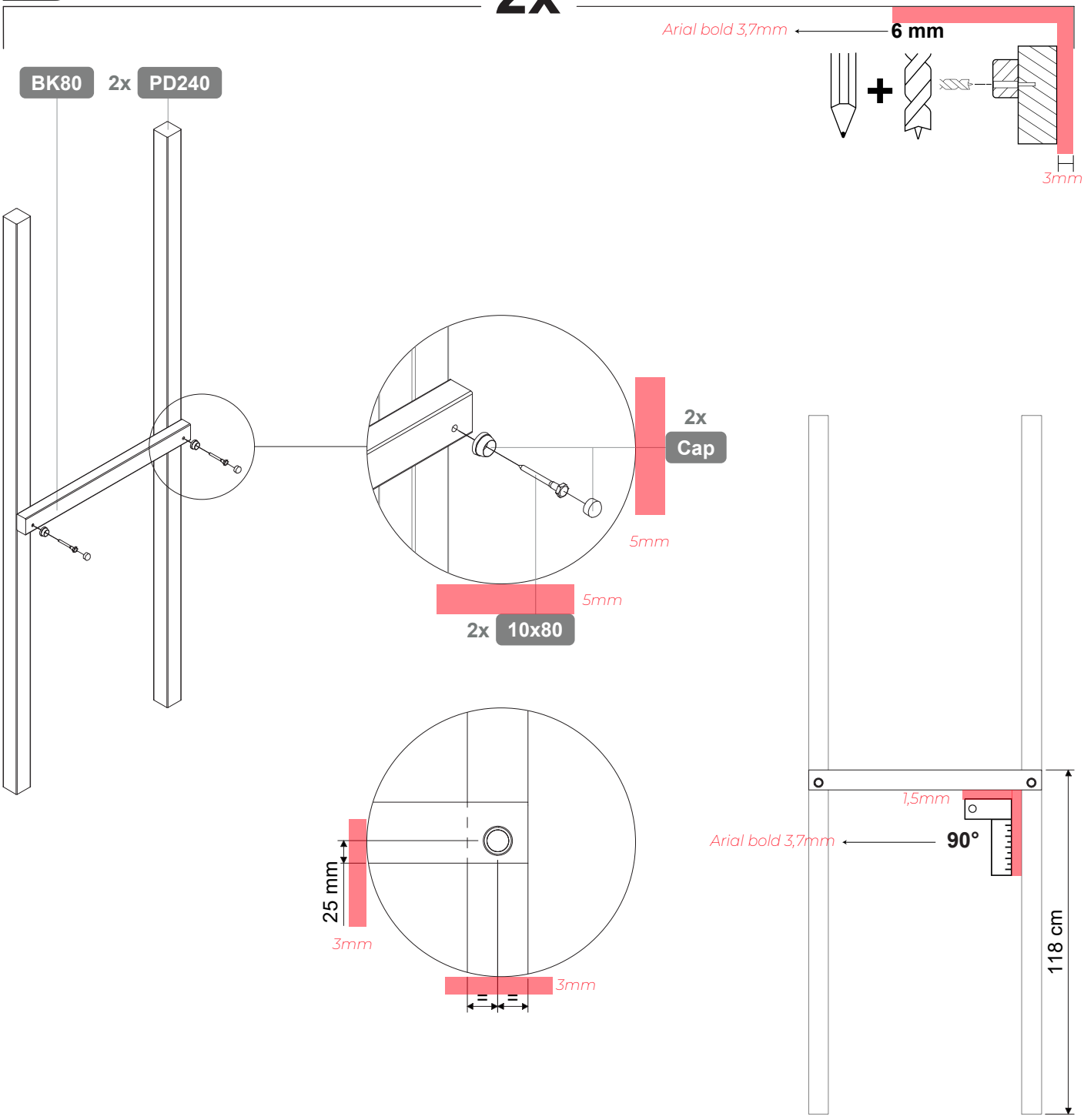

© Wickey GmbH & Co.KG | Frame 063 | Version 100