BananaBeach

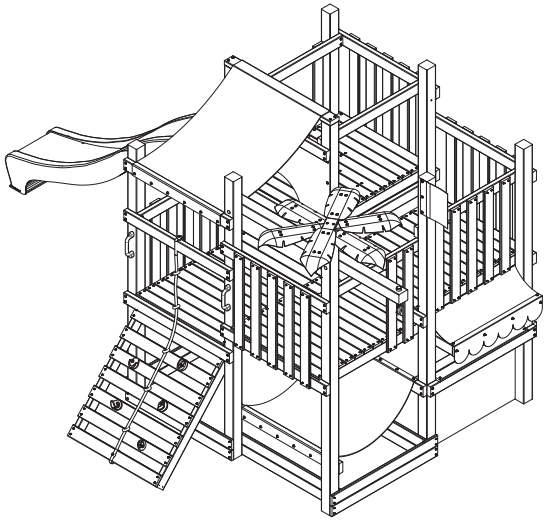

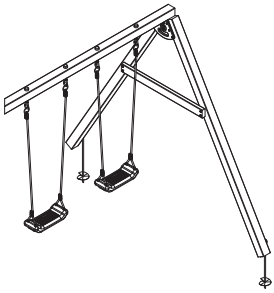

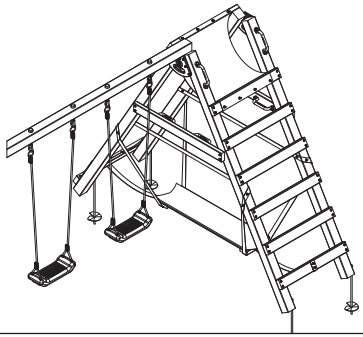

Warning! Choking Hazard - Small parts! Only for domestic use. For outdoor use only.
Product must be assembled by an adult. Customer must keep this information

0-3 **Ages 3-14**

max. **100 kg**

© Wickey Corporation . Copyrighted material. Do not reproduce under penalty of law.

202501 V100

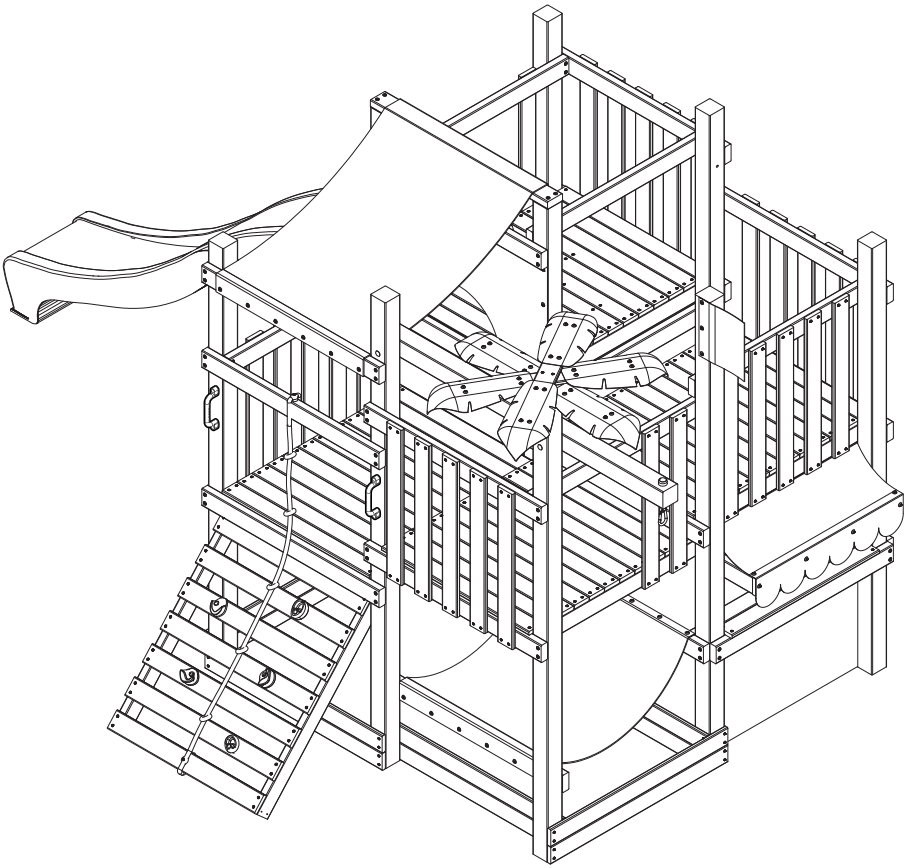

1 Tarp cutting plan

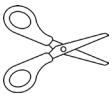

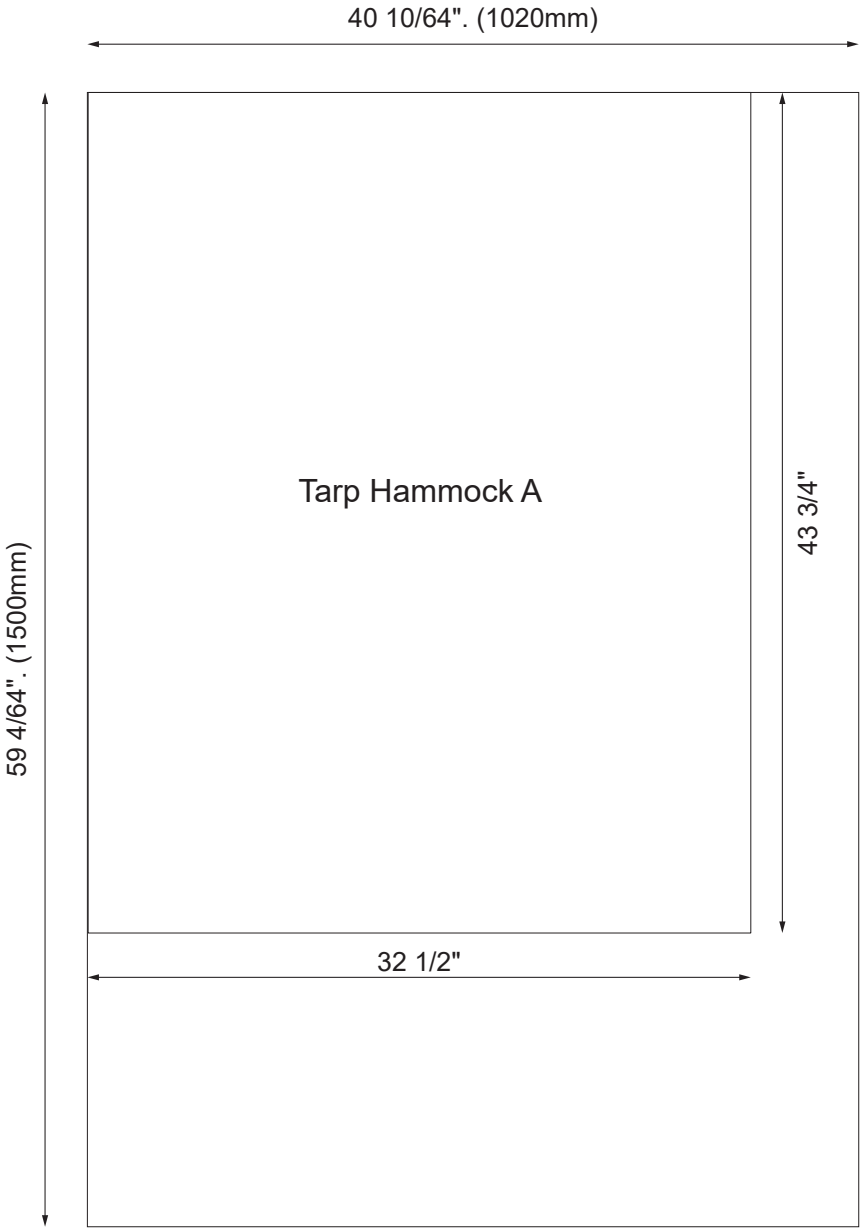

2 Tarp cutting plan

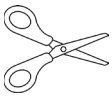

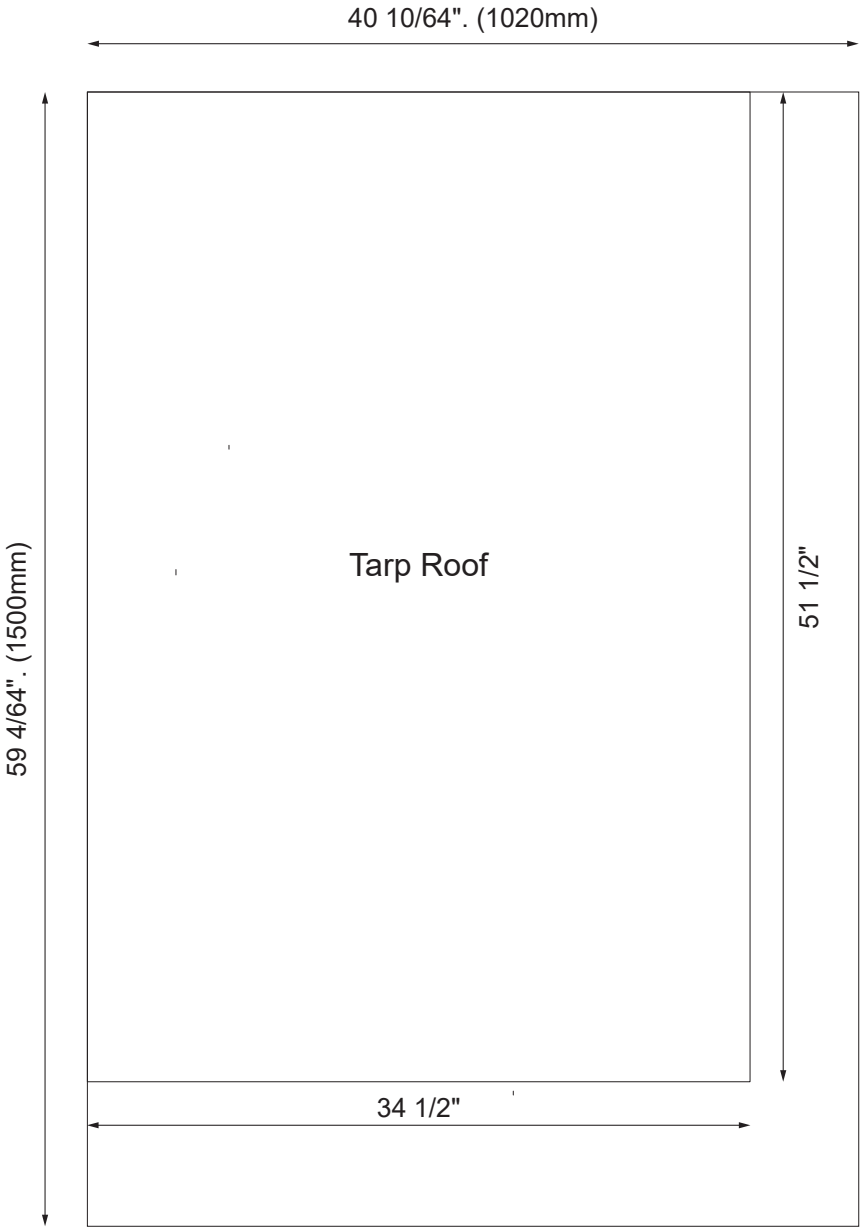

3 Tarp cutting plan

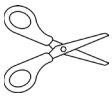

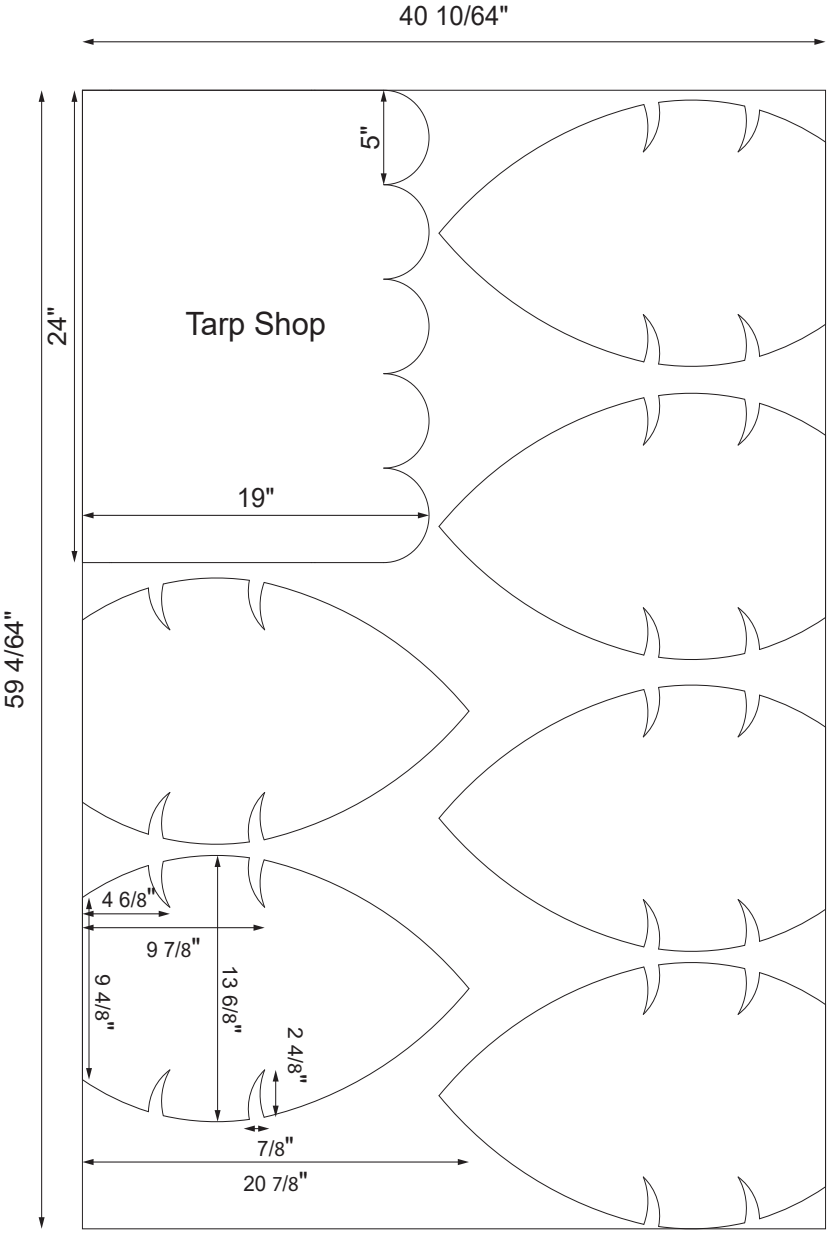

4 Tarp cutting plan

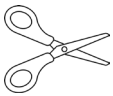

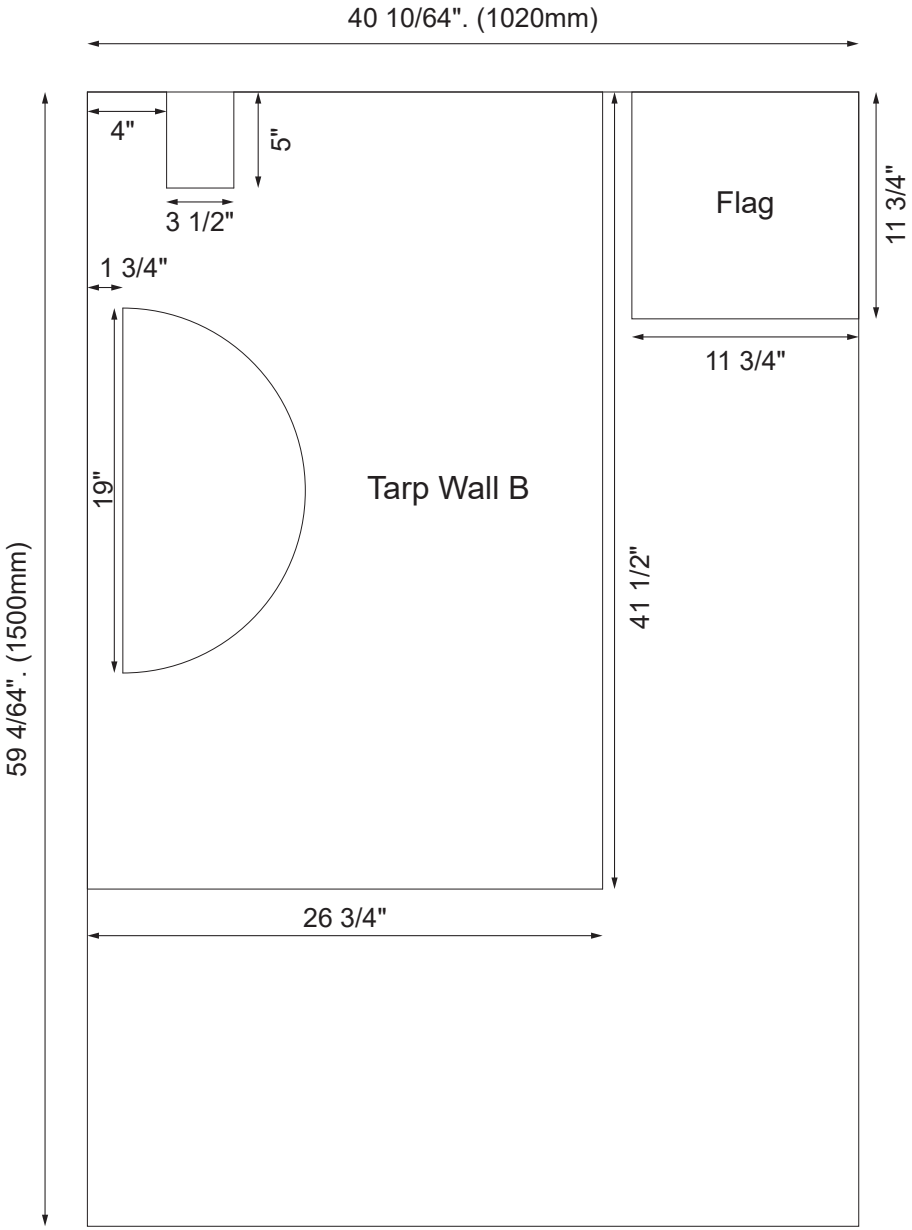

5 Tarp cutting plan

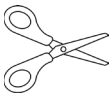

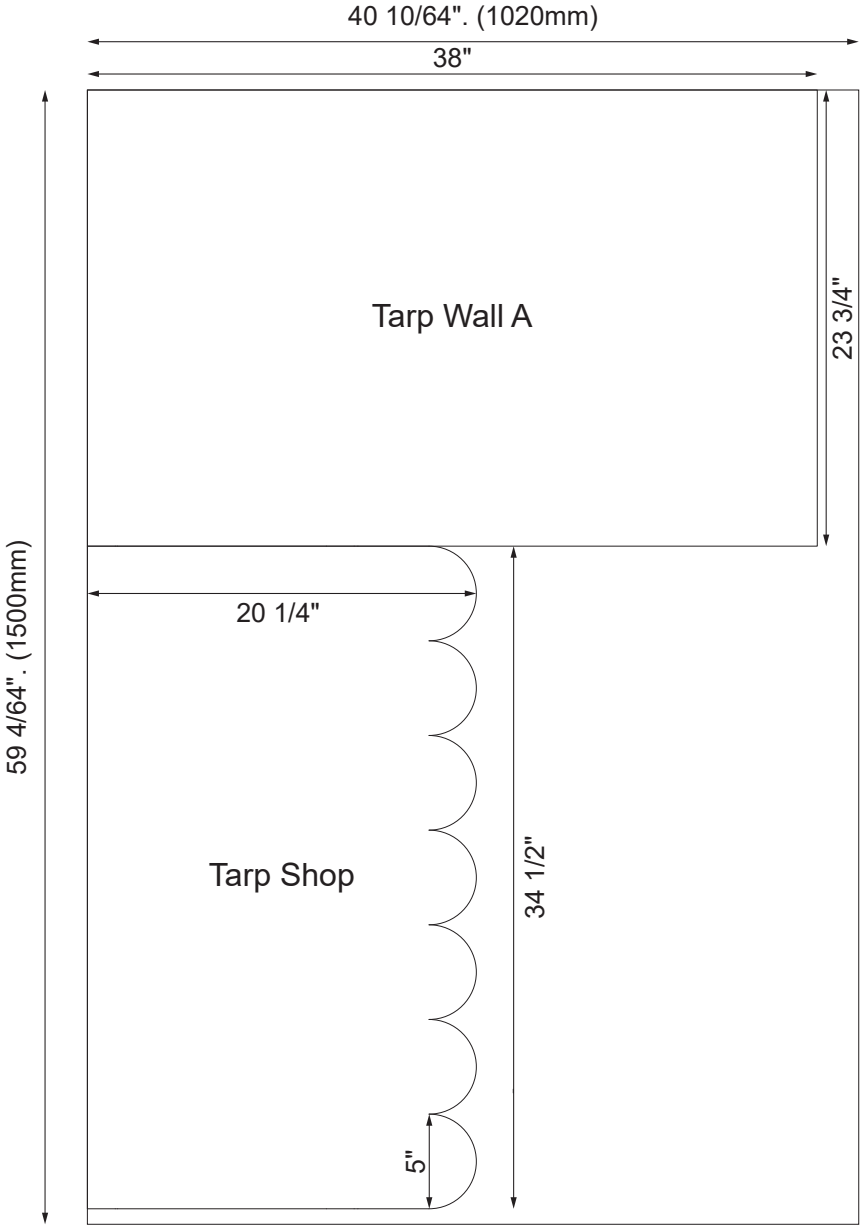

P Partlist

O32A 0.75 x 3.5 x 31.5” **29x**	**O35A** 0.75 x 3.5 x 34.5” **58x**	**O42A** 0.75 x 3.5 x 41.5” **19x**	**T10** 1.5 x 3.5 x 9.5” **4x**	**T32A** 1.5 x 3.5 x 31.5” **9x**	**T42A** 1.5 x 3.5 x 41.5” **37x**	**F65A** 3.5 x 3.5 x 65” **1x**
F87 3.5 x 3.5 x 86.5” **2x**	**F95** 3.5 x 3.5 x 94.5” **8x**	**F95A** 3.5 x 3.5 x 94.5” **3x**	**F95B** 3.5 x 3.5 x 94.5” **1x**	**5x20** PZ 2 **150x**	**4,5x50** T20 **416x**	**6x70** T30 **187x**
Washer **150x**	**Washer M10** **11x**	**Cap** **11x**	**Nut M10** **10x**	**10x80** Hexagone Wood Screw **1x**	**Ground Anchor** **4x**	**Swing Hook** **5x**
M10X190 Carriage Bolt **3x**	**55x45** Mounting Bracket **1x**	**M10X40** Carriage Bolt **2x**	**Special Cap** **4x**	**Tarp** **5x**	**Belt** **2x**	**Climbingstone** **2x**
Swing frame connector **2x**	**Rope** **1x**	**Rope Ladder** **1x**	**Grips** **5x**	**Wheel** **2x**	**Ships Wheel** **1x**	**Swing Seat** **2x**
Slide Rocli **1x**	**Telescope** **2x**	**Sticker** **1x**				

T95	F95A	F87	T42A	6x70
1.5 x 3.5 x 94.5"	3.5 x 3.5 x 94.5"	3.5 x 3.5 x 86.5"	1.5 x 3.5 x 41.5"	T30
		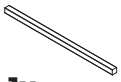		
1x	1x	1x	5x	20x

1 Frame 1

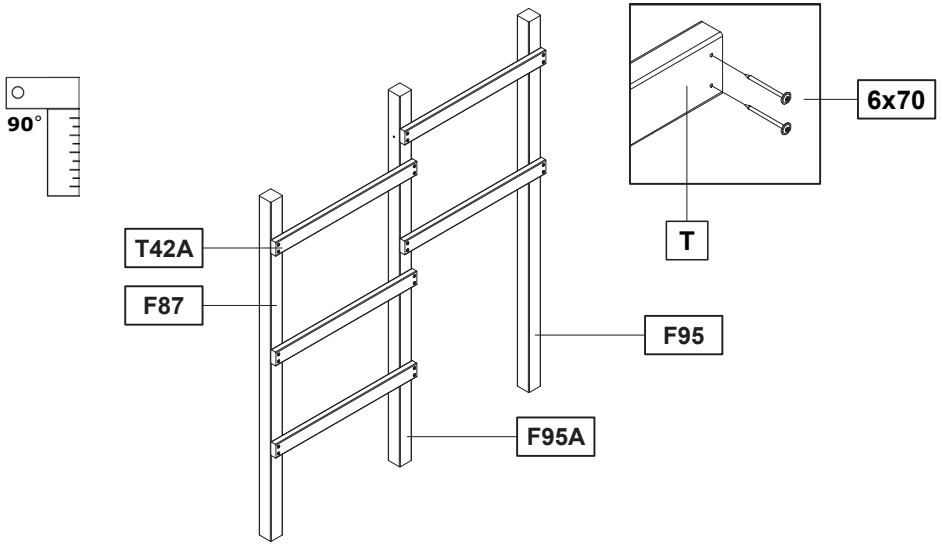

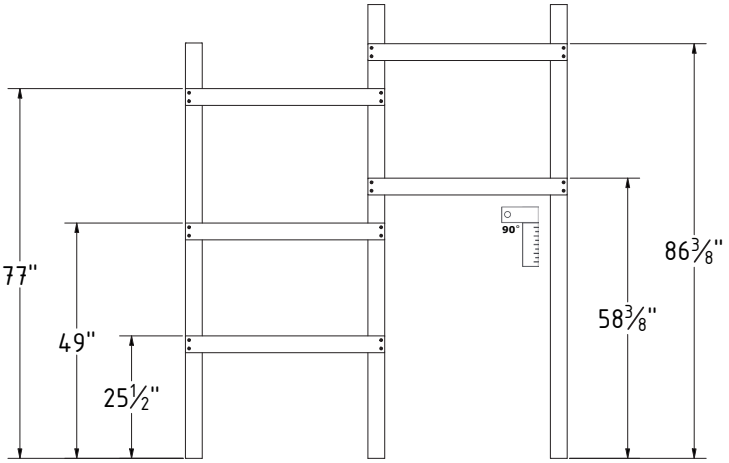

T95	T42A	O42A	6x70	#8x2”
1.5 x 3.5 x 94.5”	1.5 x 3.5 x 41.5”	0.75 x 3.5 x 41.5”	T30	T20
2x	2x	1x	4x	8x

2 Frame 2

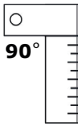

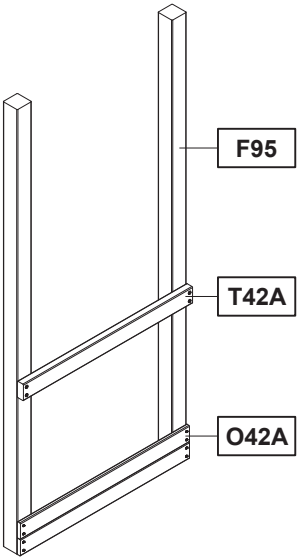

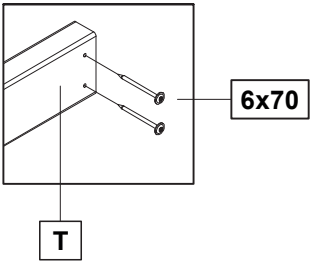

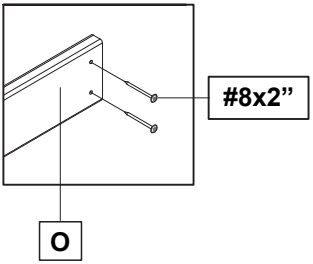

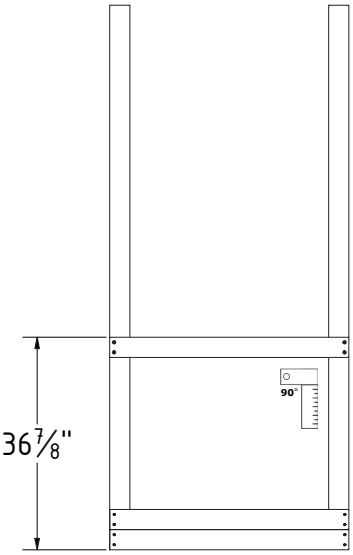

T95	O42A	4,5x50
1.5 x 3.5 x 94.5”	0.75 x 3.5 x 41.5”	T20
1x	2x	2x

3 Frame 2 (rear)

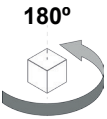

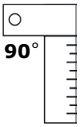

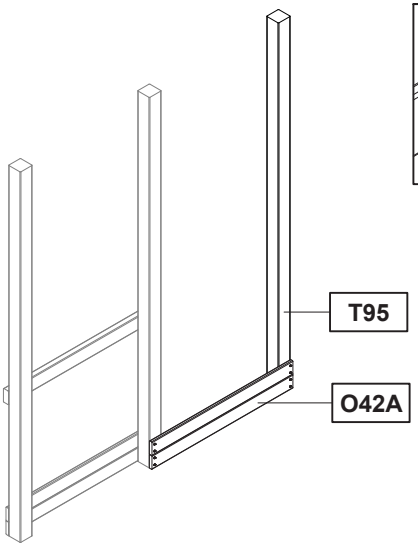

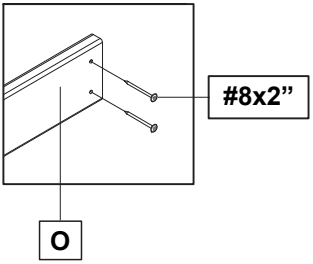

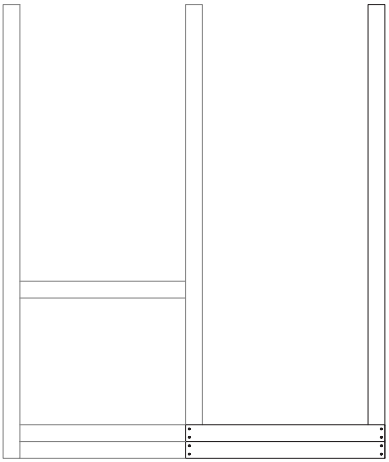

4

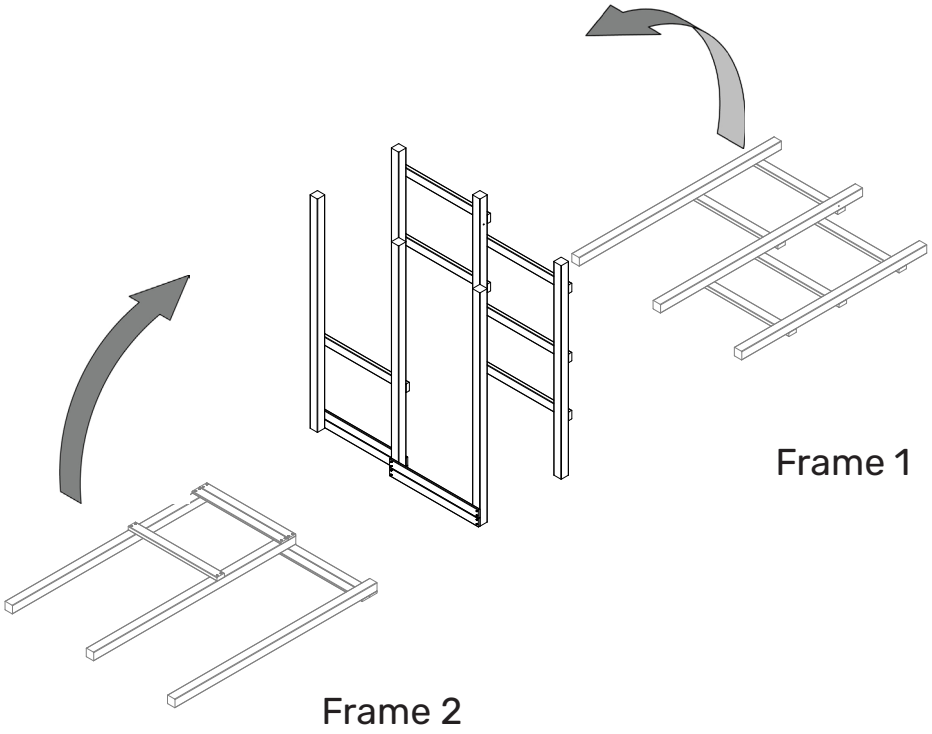

T42A	6x70
1.5 x 3.5 x 41.5"	T30
2x	8x

5

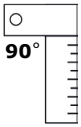

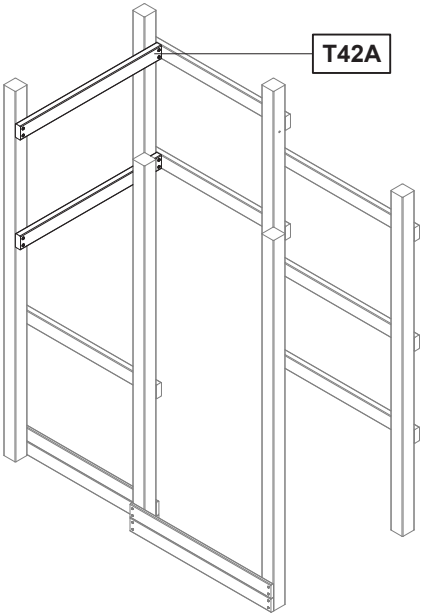

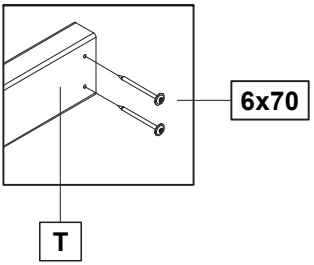

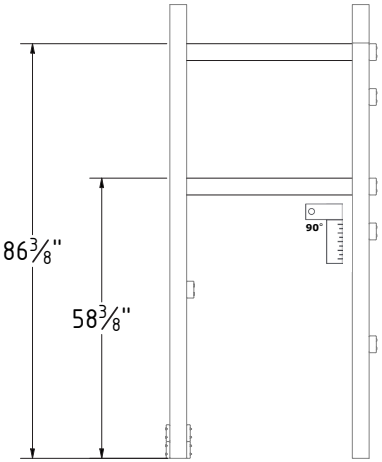

T42A	6x70
1.5 x 3.5 x 41.5"	T30
4x	16x

6

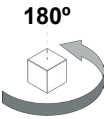

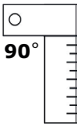

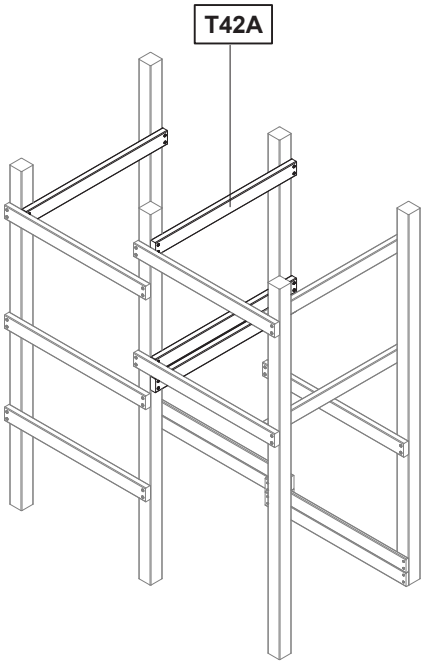

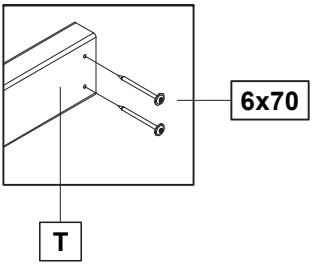

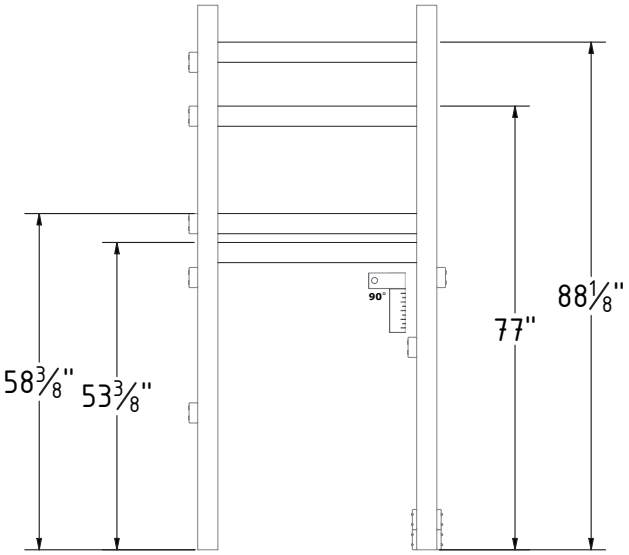

F95A	T87	T42A	O42A	6x70	4,5x50
3.5 x 3.5 x 94.5”	1.5 x 3.5 x 86.5”	1.5 x 3.5 x 41.5”	0.75 x 3.5 x 41.5”	T30	T20
2x	**1x**	**4x**	**2x**	**16x**	**8x**

7 Frame 3

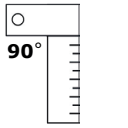

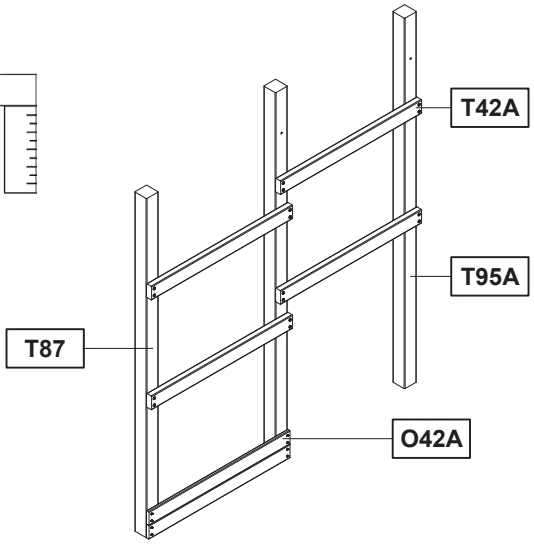

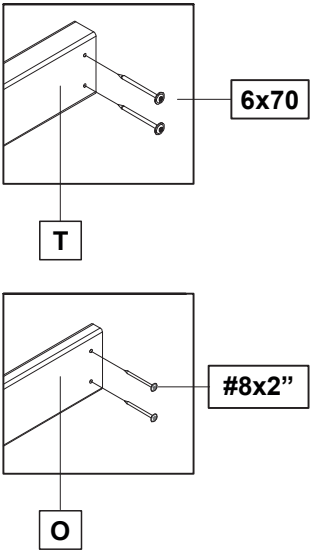

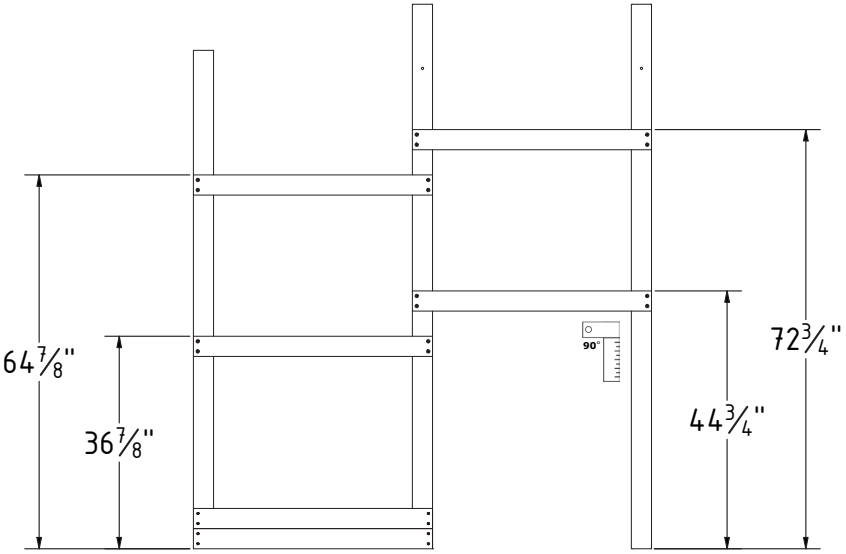

O42A	4,5x50
0.75 x 3.5 x 41.5”	T20
2x	8x

8 Frame 3 (rotated)

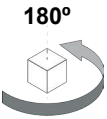

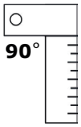

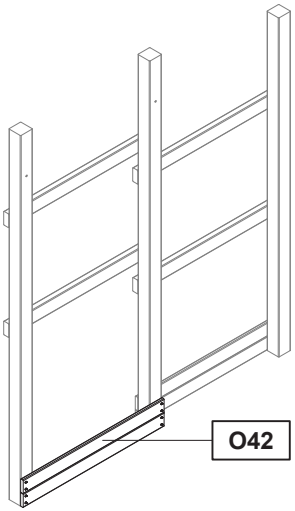

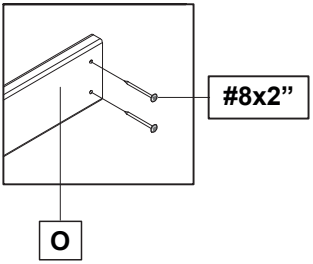

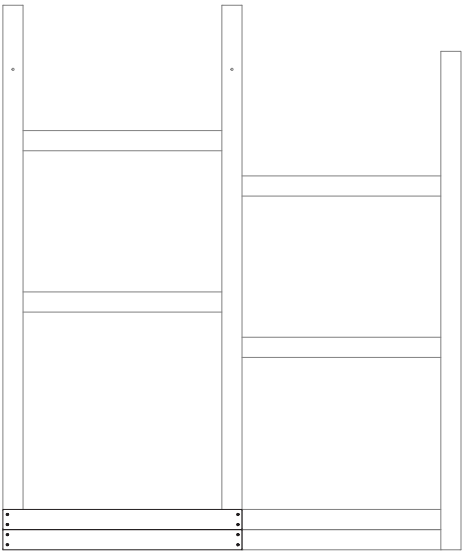

9

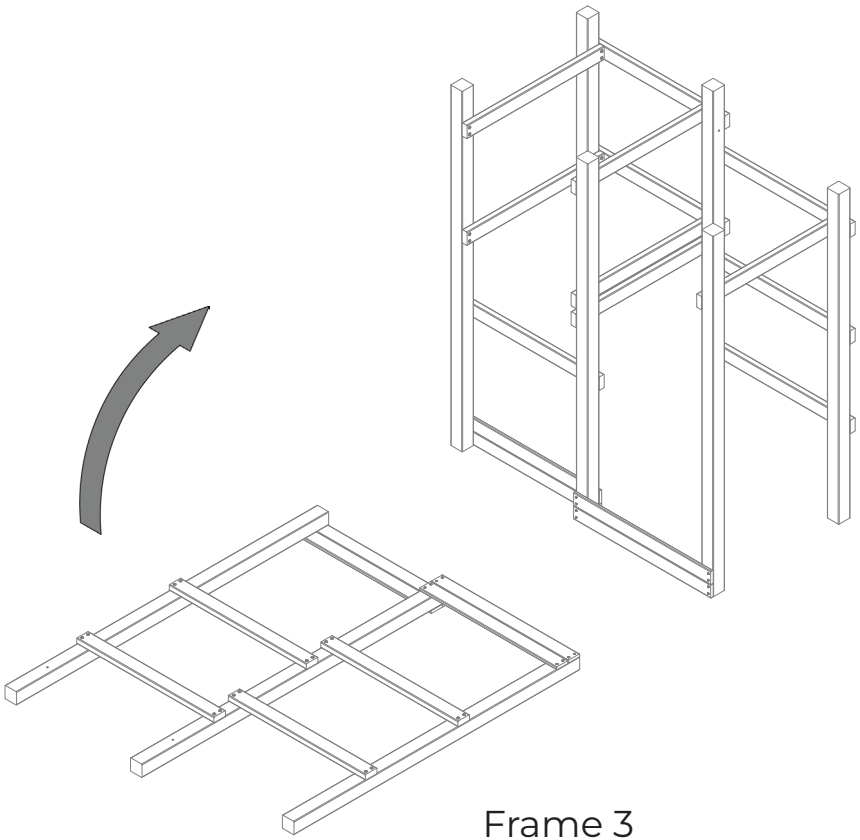

Frame 3

T42A	6x70
1.5 x 3.5 x 41.5"	T30
3x	12x

10

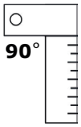

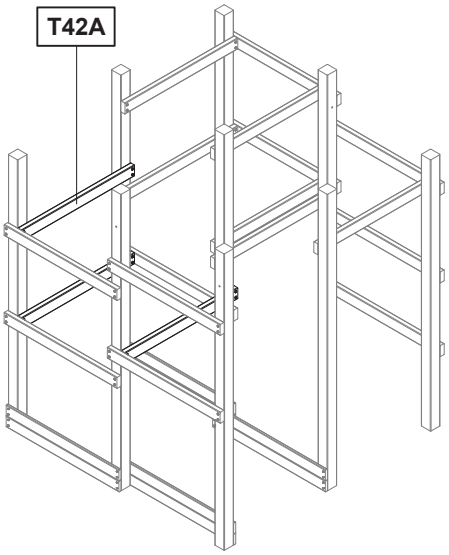

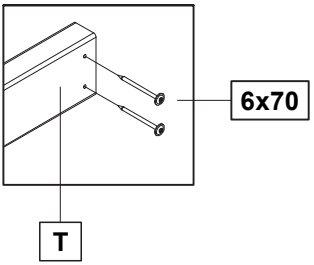

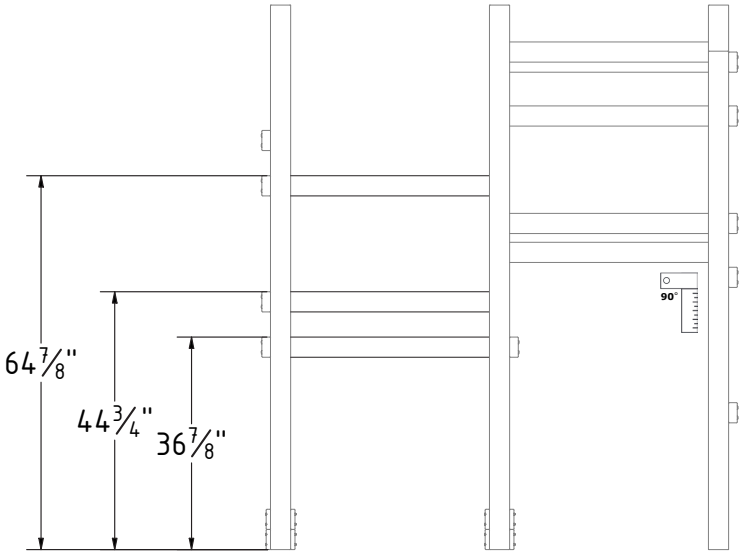

T42A 1.5 x 3.5 x 41.5"	6x70 T30
 4x	 **16x**

11

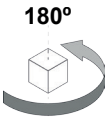

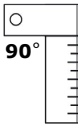

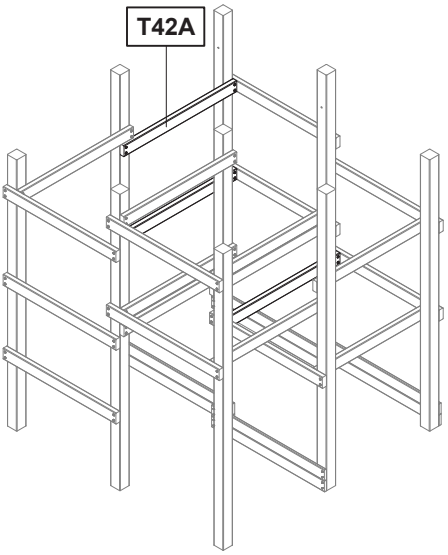

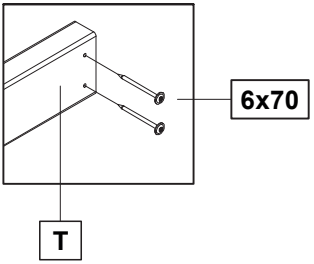

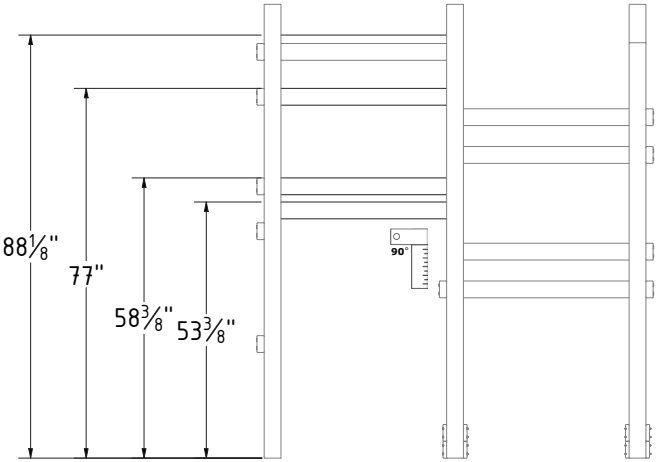

O42A 0.75 x 3.5 x 41.5”	4,5x50 T20
 4x	 **16x**

12

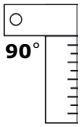

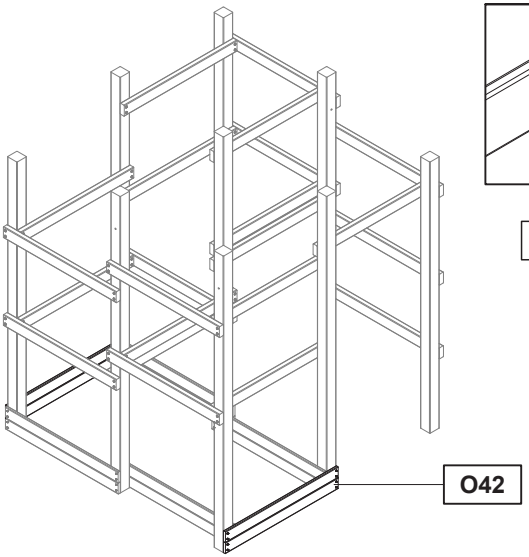

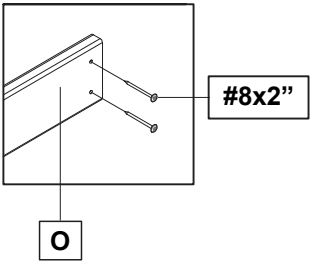

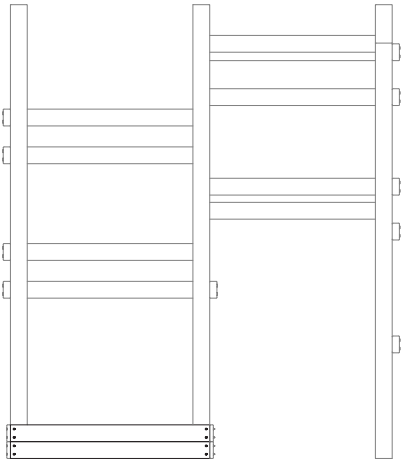

O35A	4,5x50
0.75 x 3.5 x 34.5”	T20
12x	48x

13

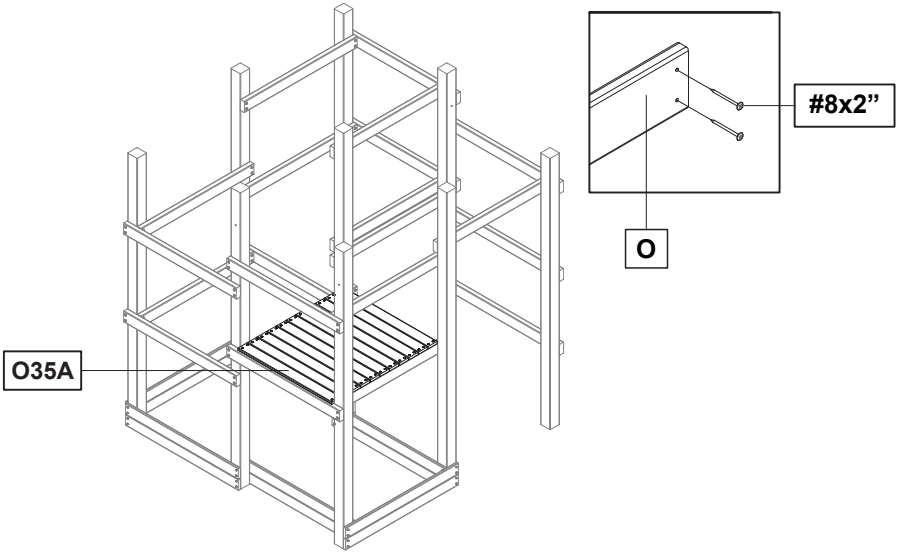

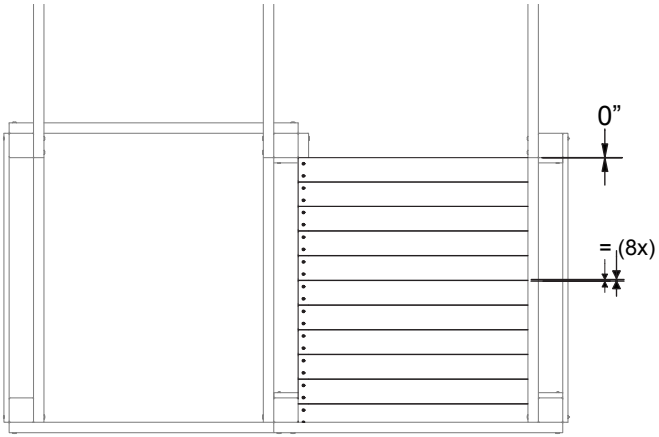

T42A	6x70
1.5 x 3.5 x 41.5"	T30
1x	4x

14

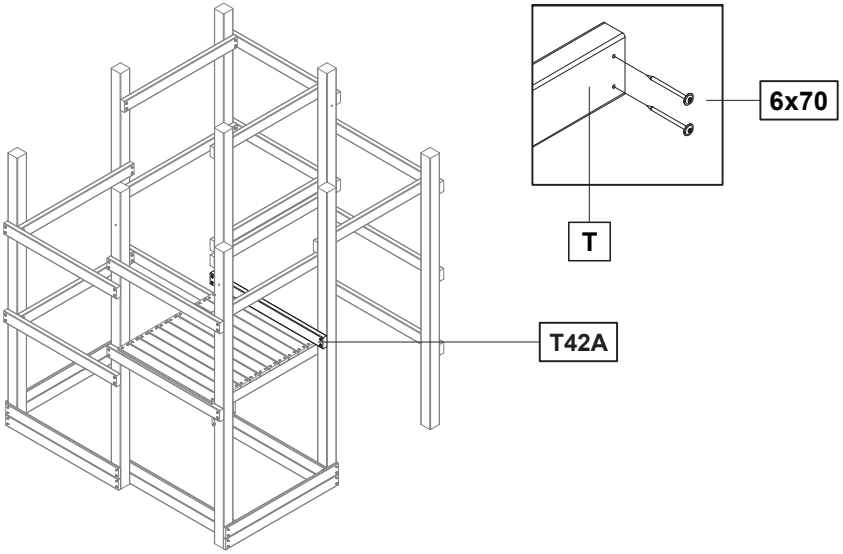

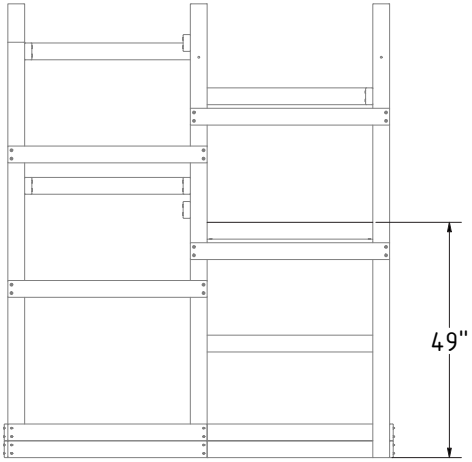

T42A	6x70
1.5 x 3.5 x 41.5"	T30
1x	4x

15

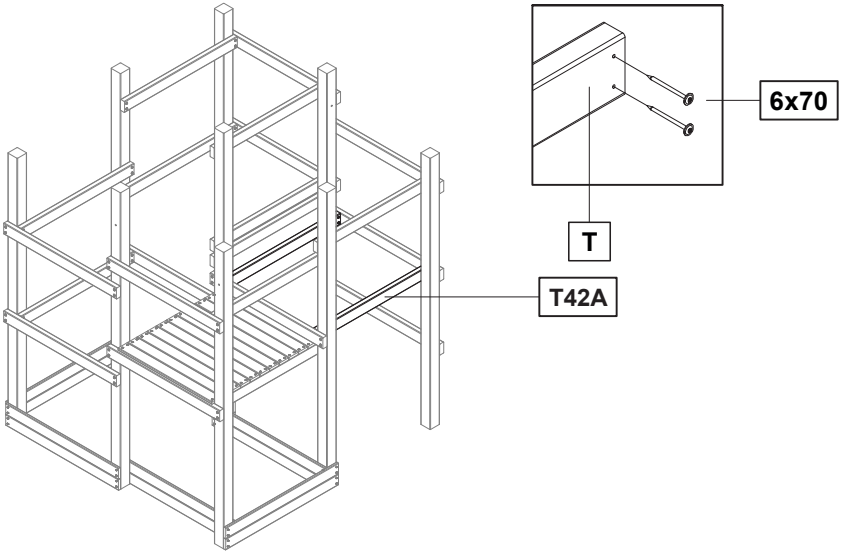

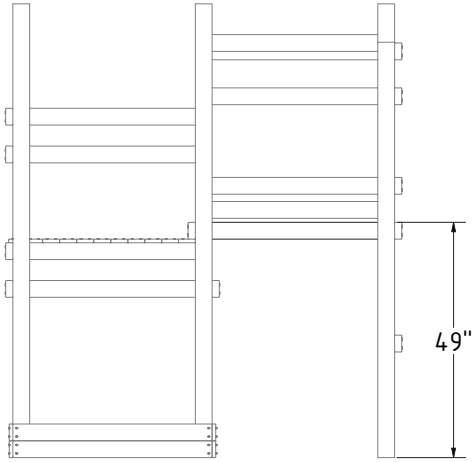

O35A	4,5x50
0.75 x 3.5 x 34.5”	T20
12x	48x

1

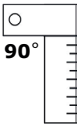

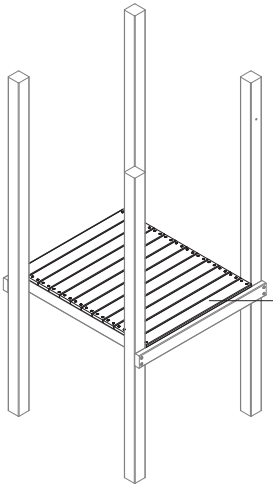

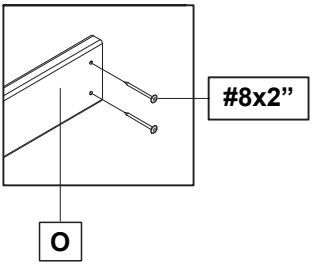

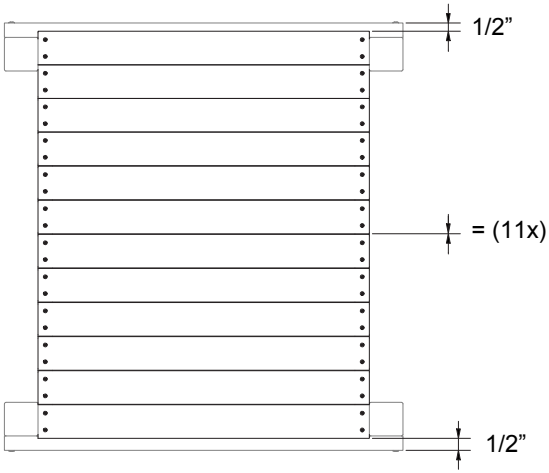

2

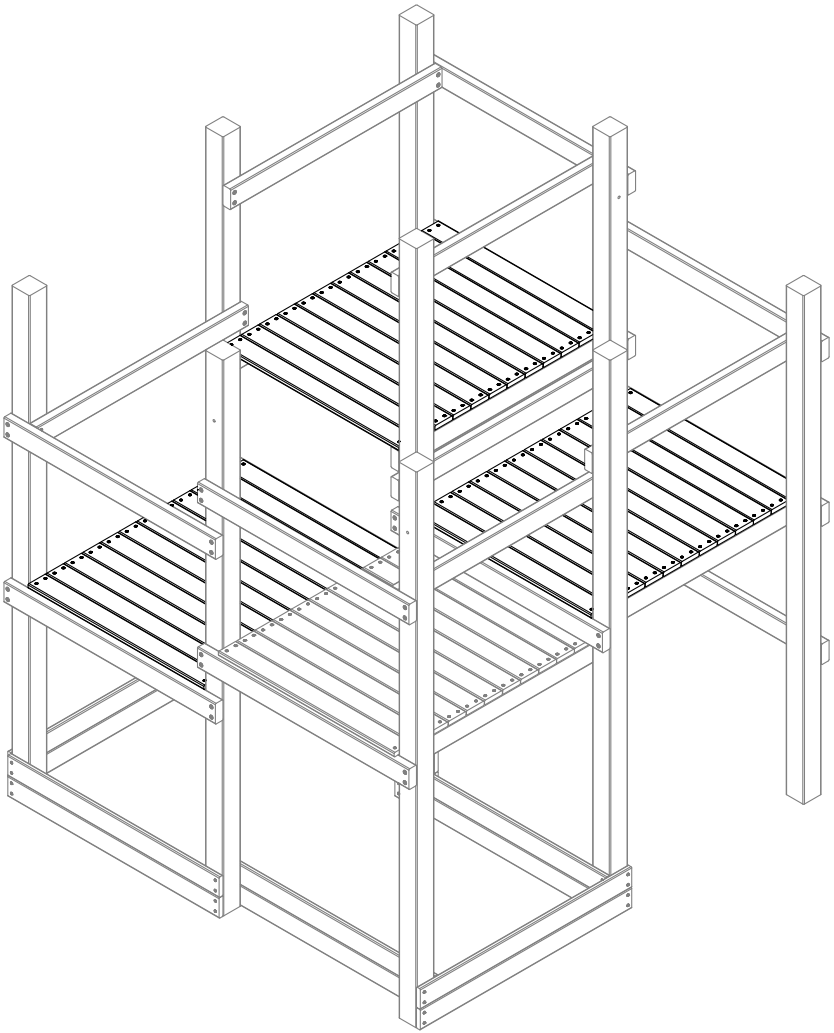

O32A	4,5x50
0.75 x 3.5 x 31.5"	T20
25x	**100x**

1 Wall

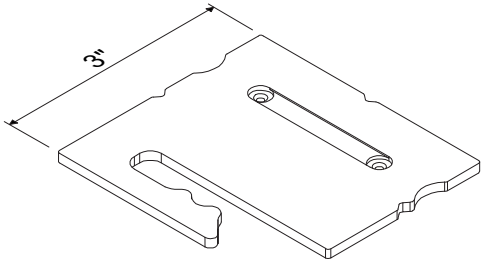

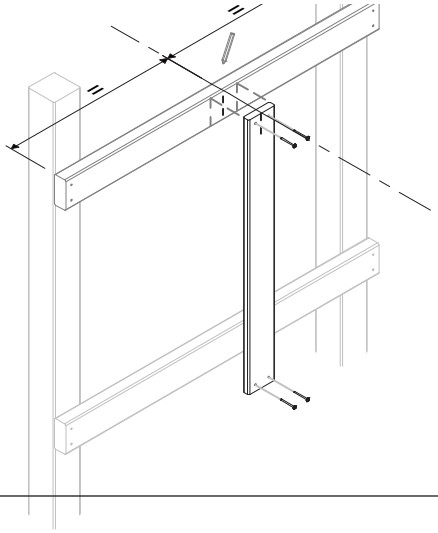

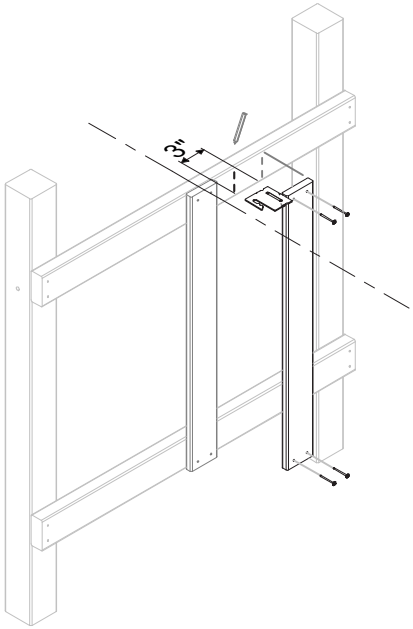

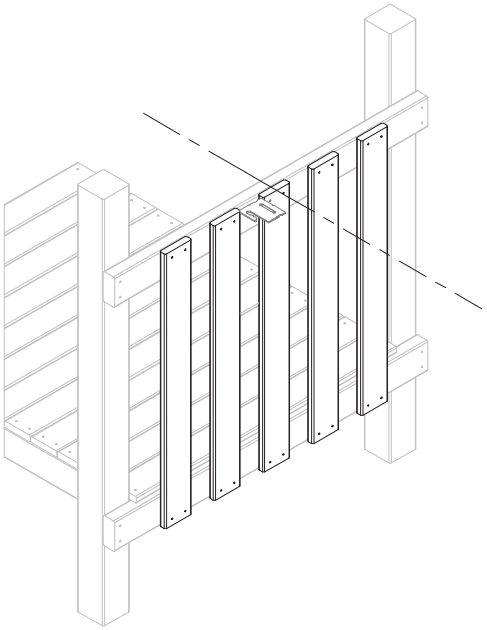

2

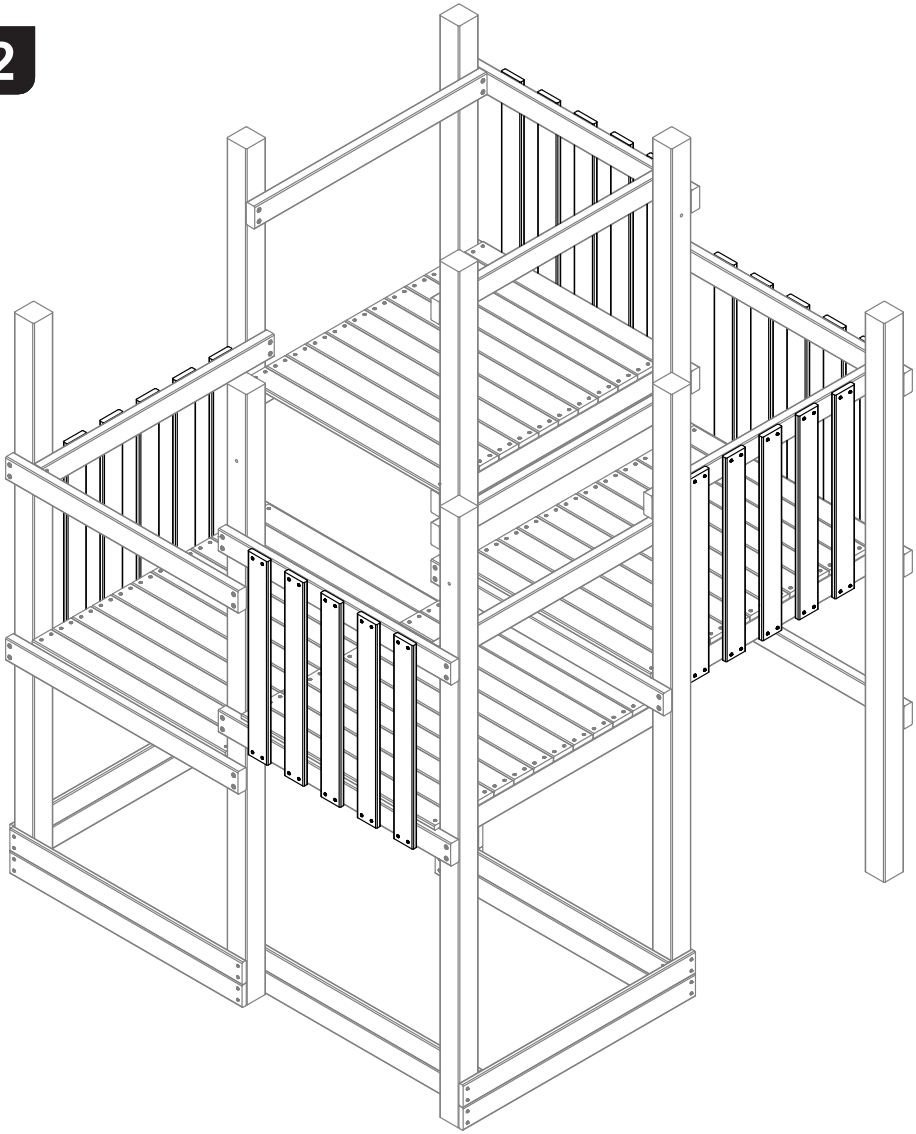

O32A	4,5x50
0.75 x 3.5 x 31.5”	T20
2x	8x

1

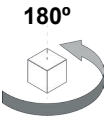

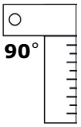

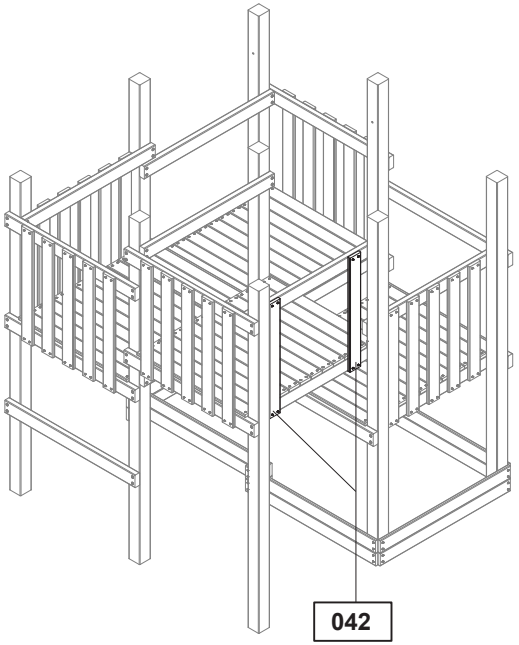

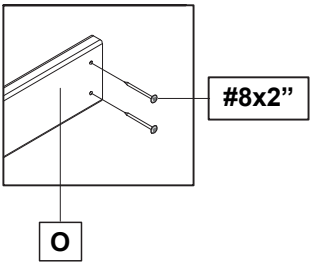

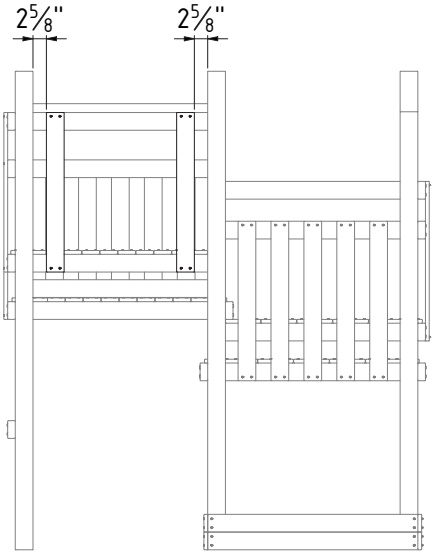

© Wickey Corporation | F21 | Version 100

T95	T87	T32A	O32A	6x70	4,5x50
1.5 x 3.5 x 94.5”	1.5 x 3.5 x 86.5”	1.5 x 3.5 x 31.5”	0.75 x 3.5 x 31.5”	T30	T20
1x	2x	3x	1x	12x	4x

2

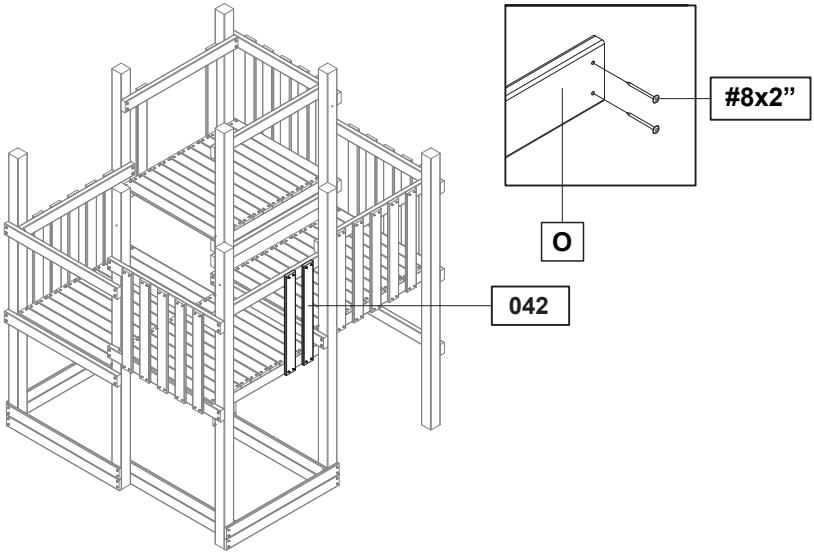

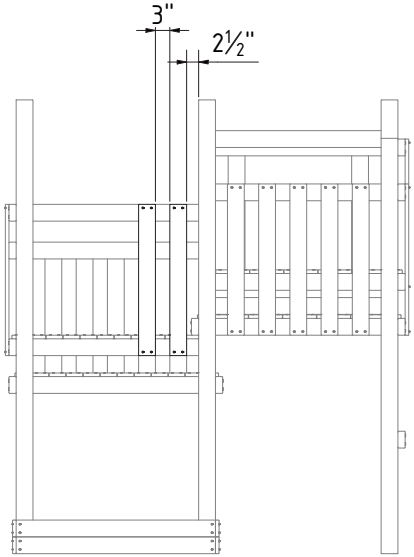

O42A 0.75 x 3.5 x 41.5”	4,5x50 T20
 4x	 **16x**

1 Climbing 90

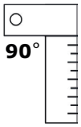

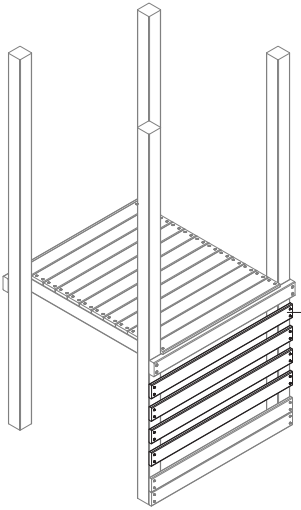

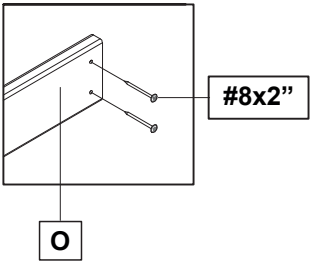

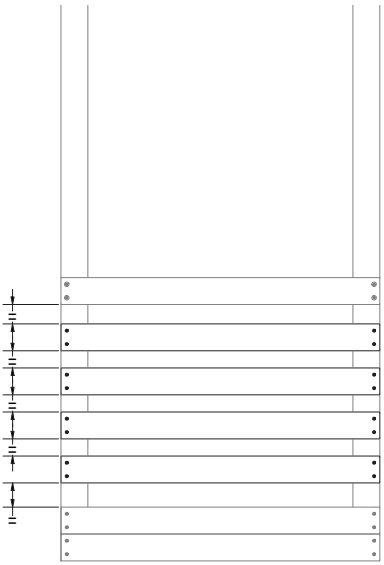

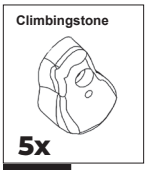

2 Climbing 90

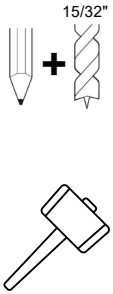

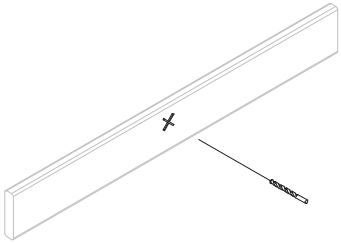

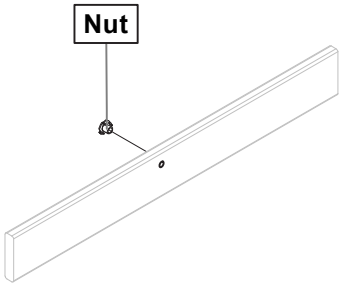

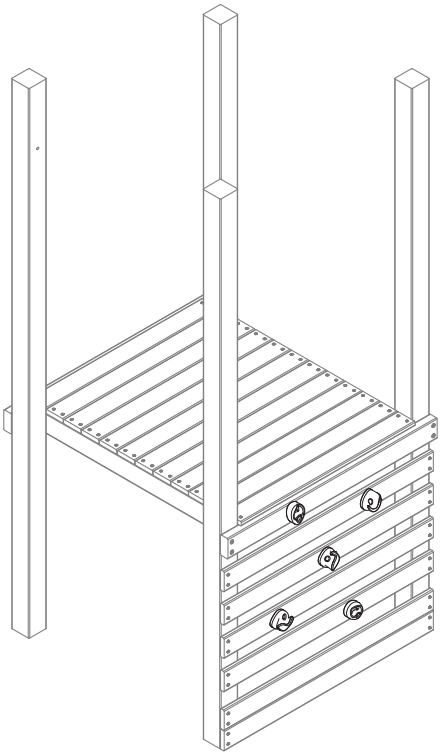

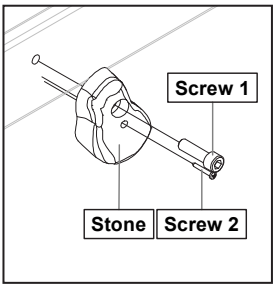

T42A 1.5 x 3.5 x 41.5”	Tarp	5x20 PZ 2	Washer
	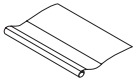		
1x	**1x**	**6x**	**6x**

1 Wall Tarp

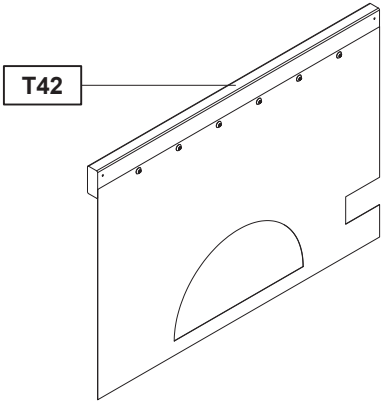

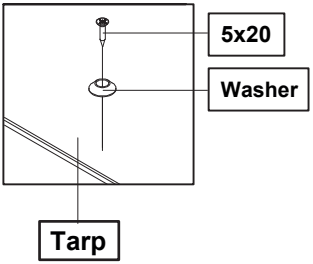

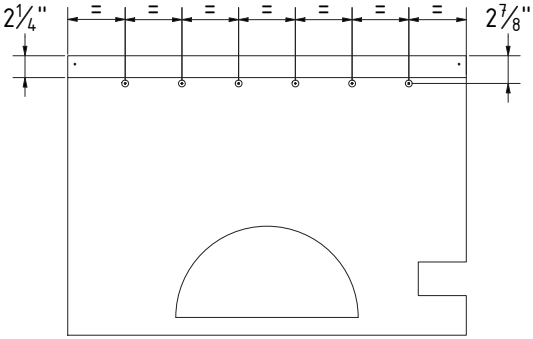

6x70	5x20	Washer
T30	PZ 2	
4x	8x	8x

2 Wall Tarp

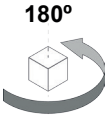

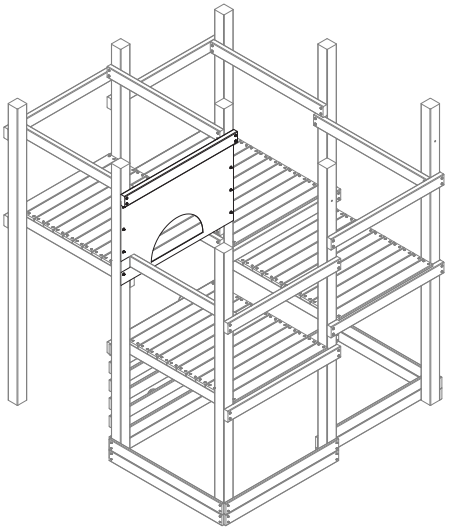

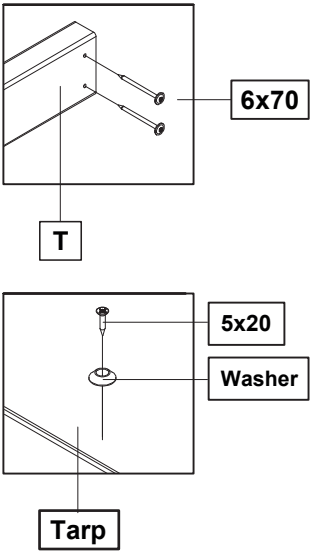

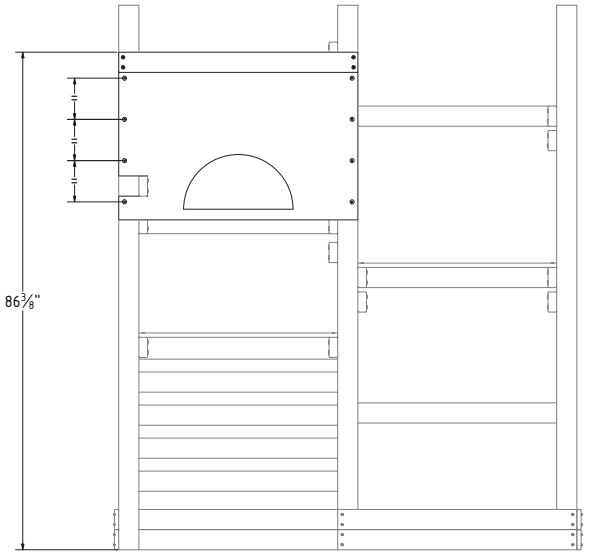

T42A	6x70
1.5 x 3.5 x 41.5"	T30
1x	4x

3 Wall Tarp

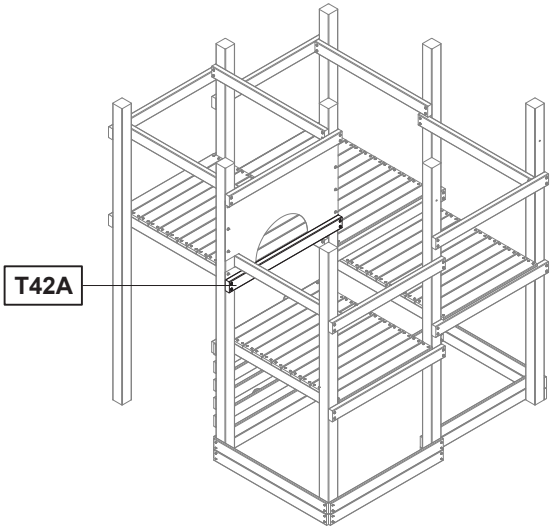

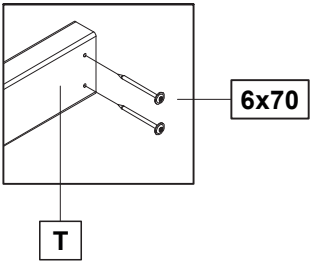

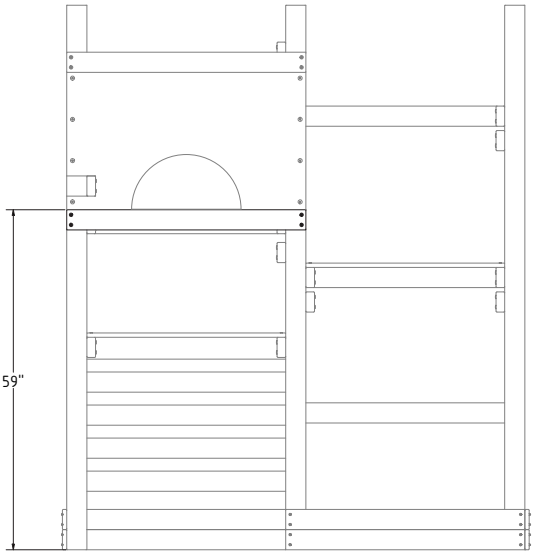

T42A	6x70
1.5 x 3.5 x 41.5"	T30
2x	8x

2 Roof Tarp

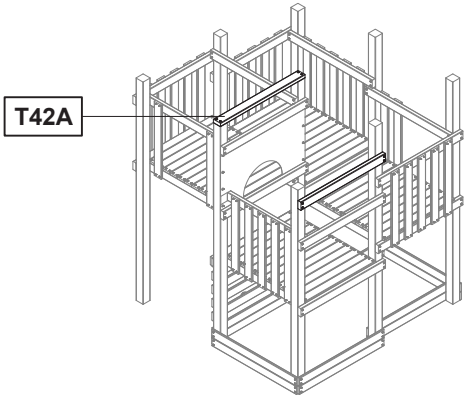

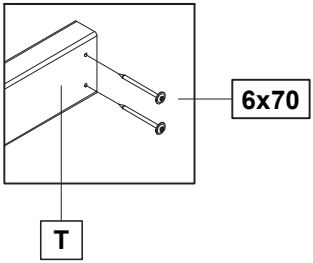

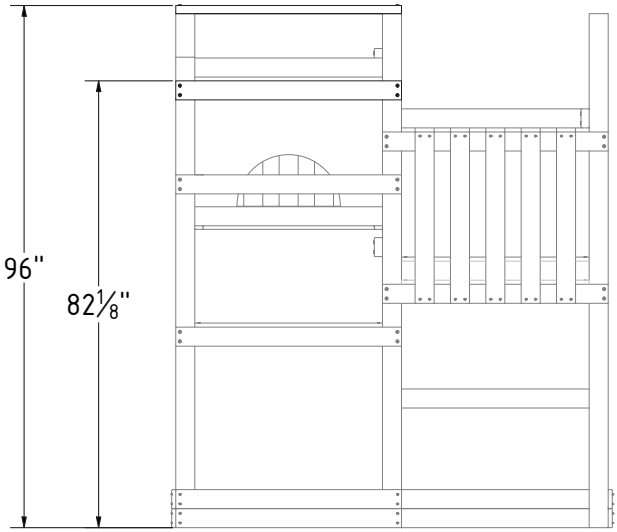

Tarp	5x20 PZ 2	Washer
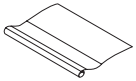		
1x	**12x**	**12x**

1 Roof Tarp

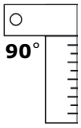

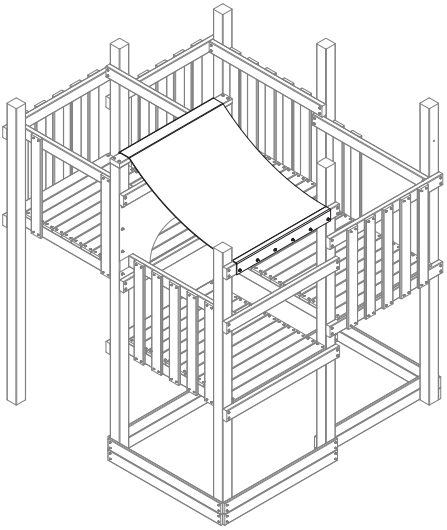

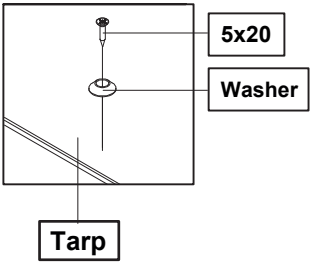

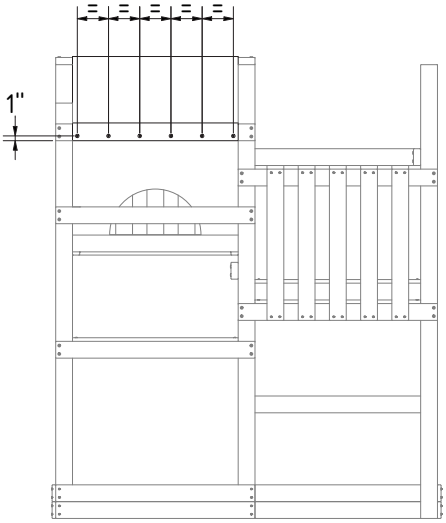

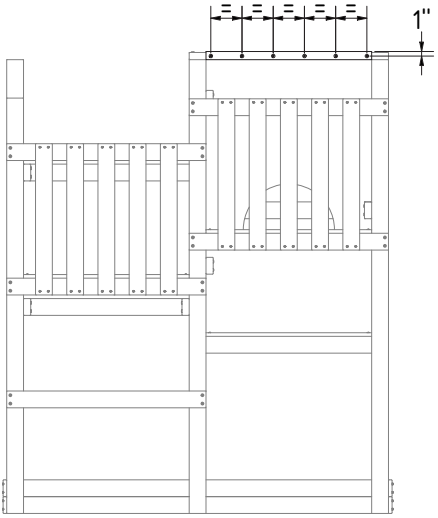

T32A	6x70
1.5 x 3.5 x 31.5”	T30
1x	2x

1 Palm

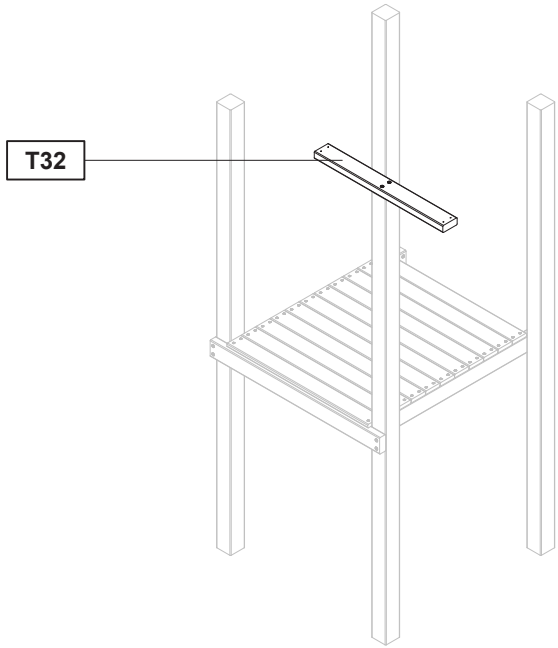

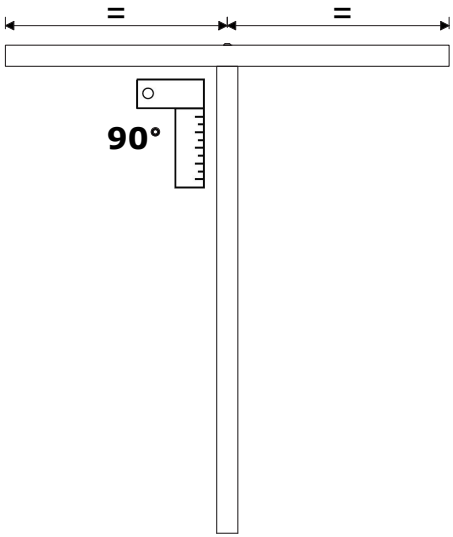

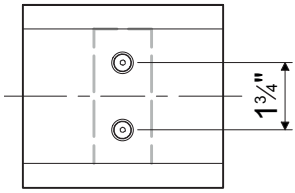

O32A
0.75 x 3.5 x 31.5"

2x

2 Palm

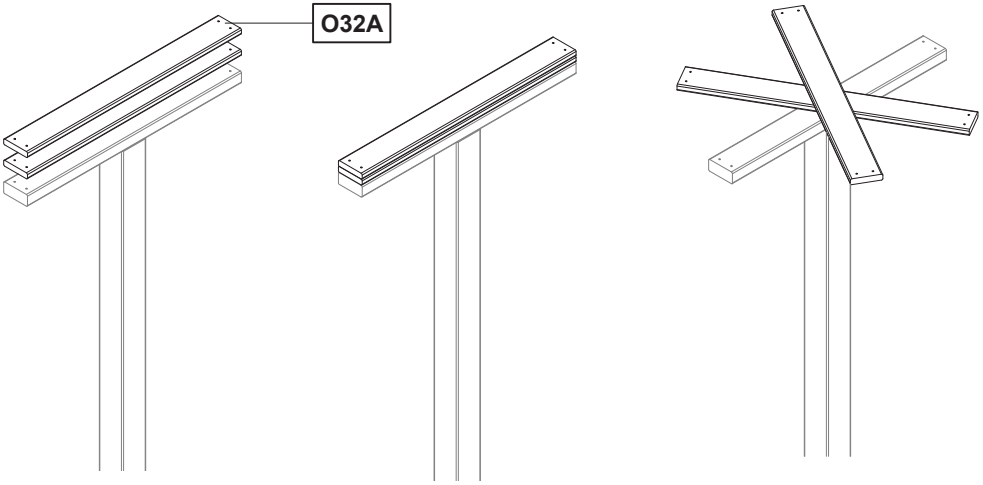

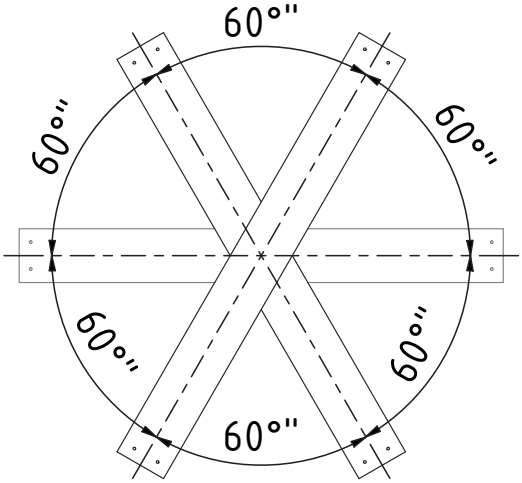

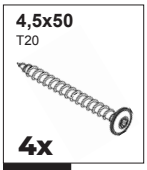

3 Palm

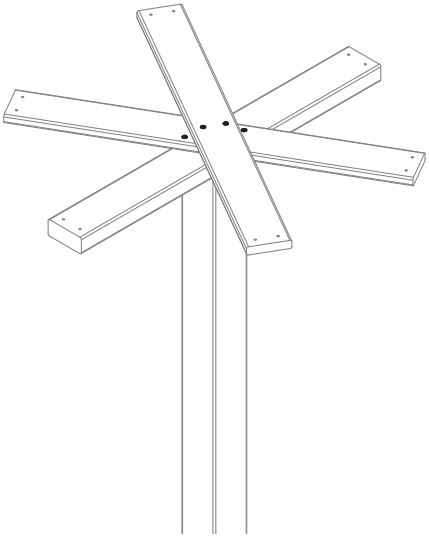

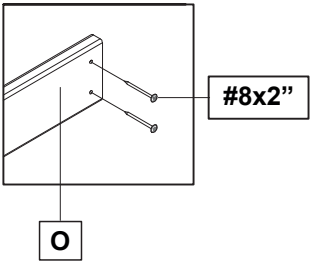

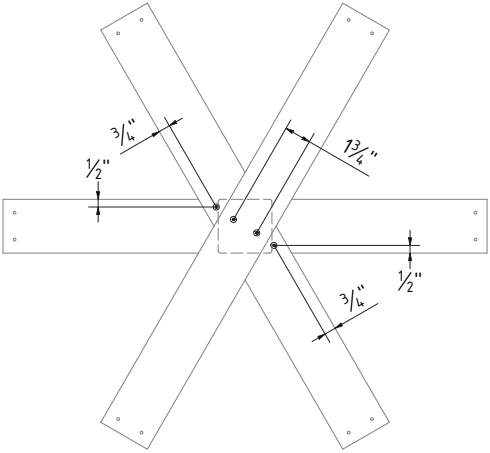

Tarp	5x20 PZ 2	Washer
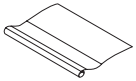		
6x	**24x**	**24x**

4 Palm

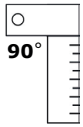

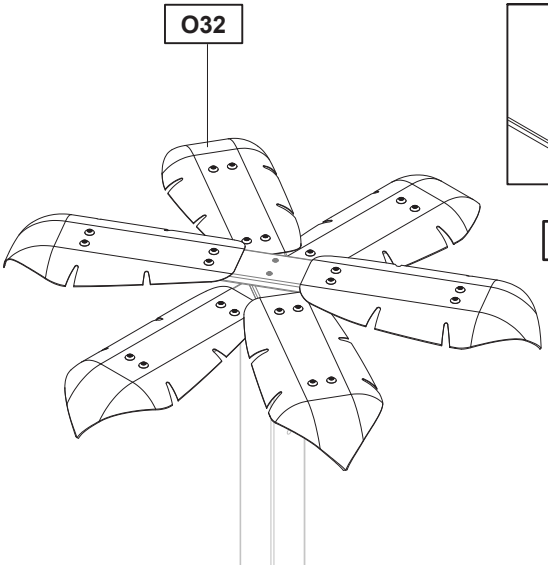

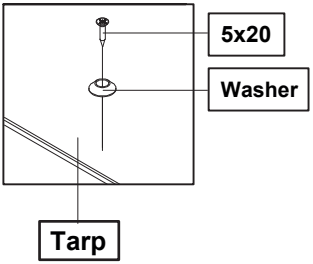

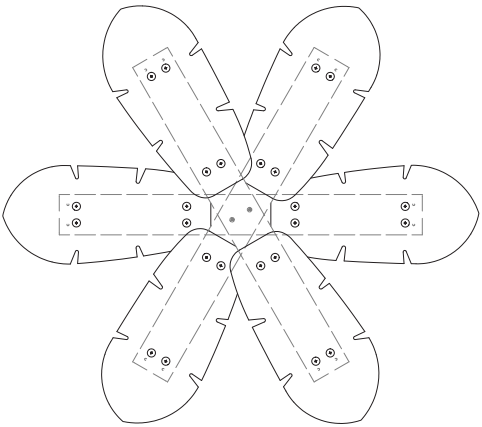

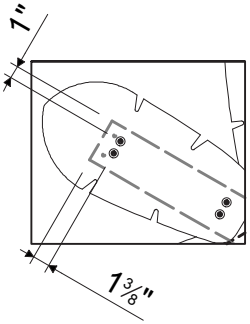

T42A	O35A	4,5x50
1.5 x 3.5 x 41.5”	0.75 x 3.5 x 34.5”	T20
2x	**7x**	**14x**

1 Ladder 90

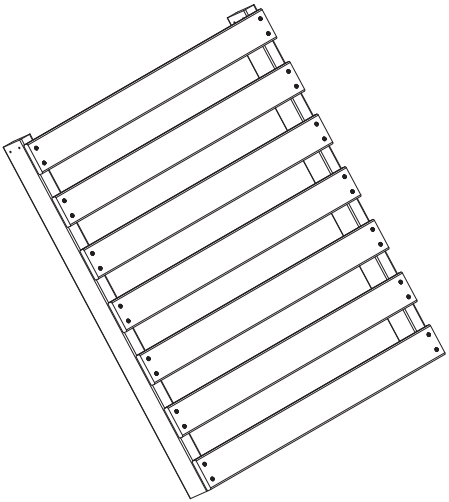

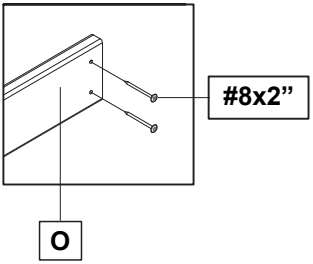

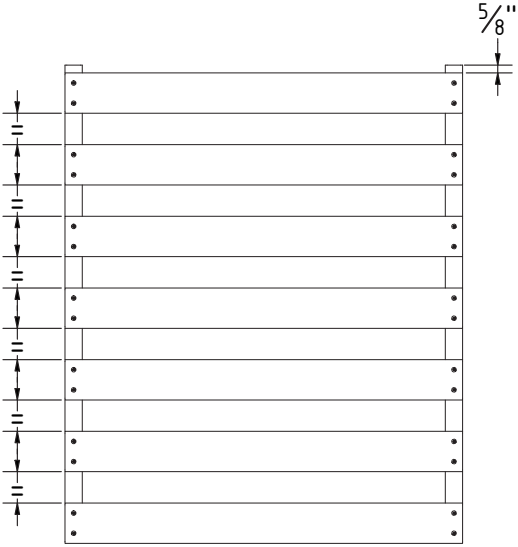

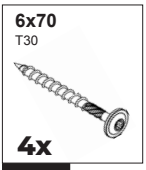

2 Ladder 90

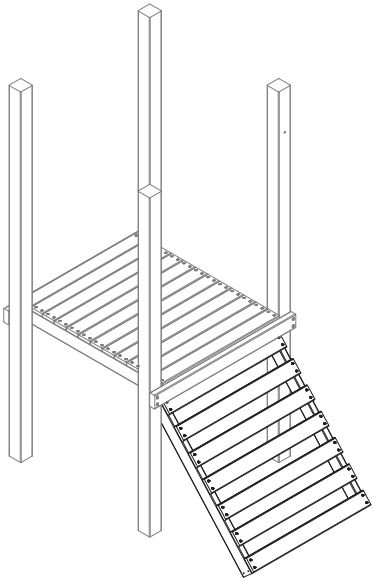

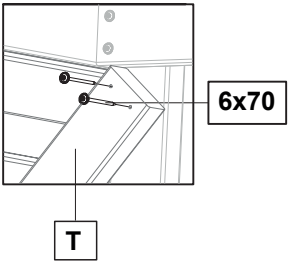

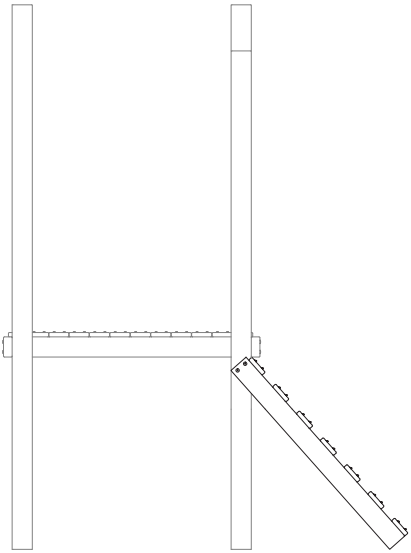

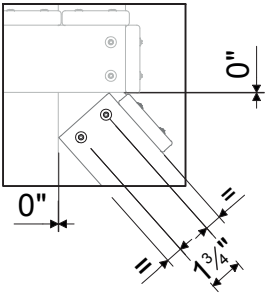

Rope	4,5x50 T20	Special Cap
1x	2x	2x

3 Ladder 90

5x

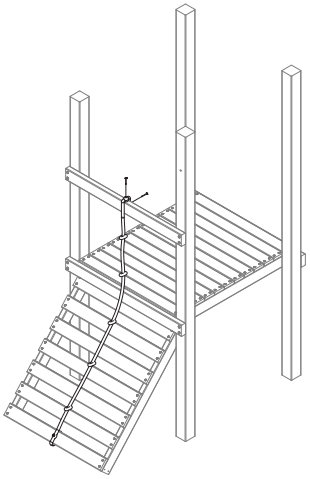

Special Cap

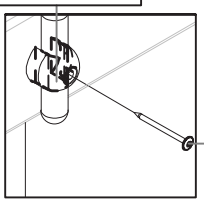

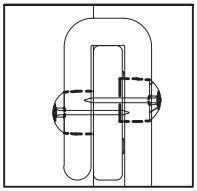

Option 1

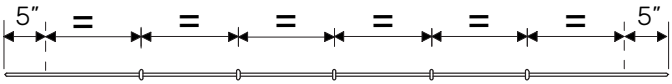

Option 2

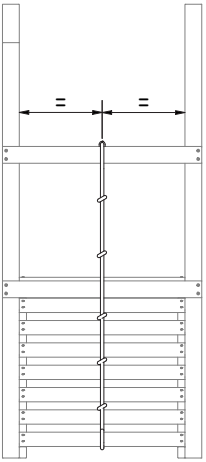

4,5x50 T20	Special Cap
2x	2x

4 Ladder 90

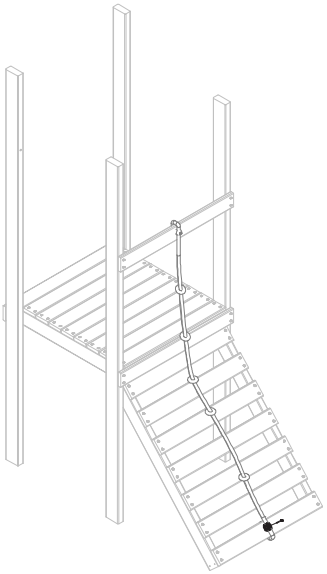

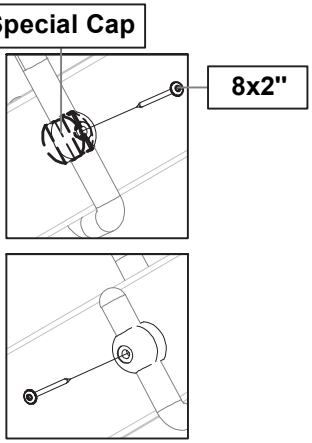

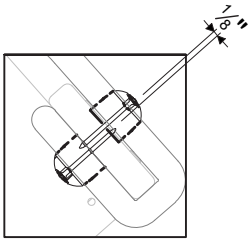

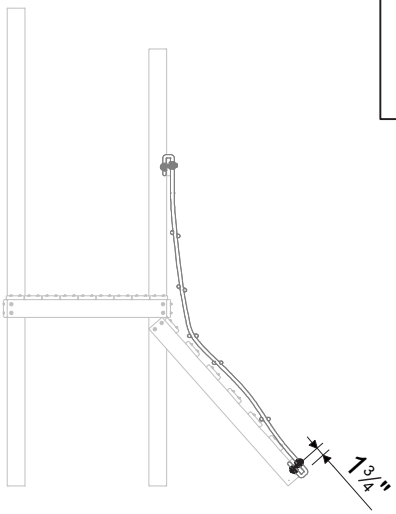

T10	6x70
1.5 x 3.5 x 9.5”	T30
2x	**4x**

1 Shop

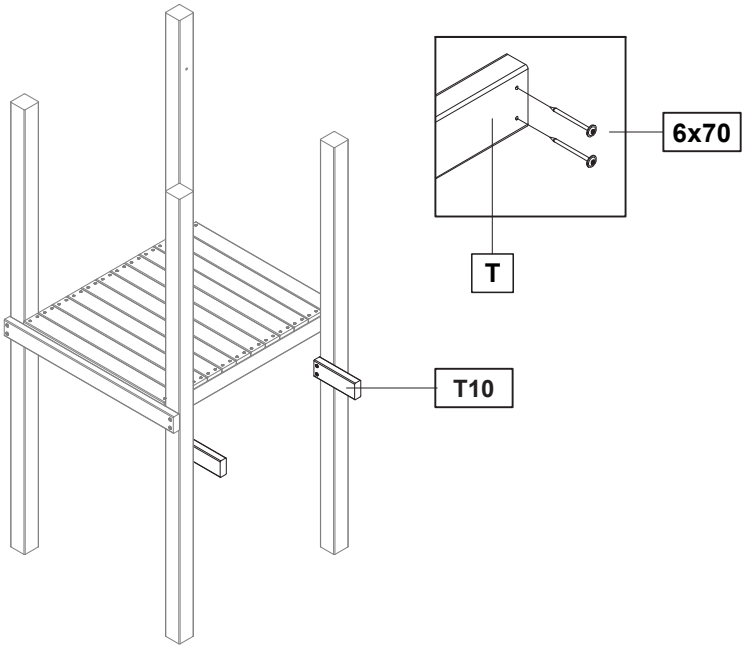

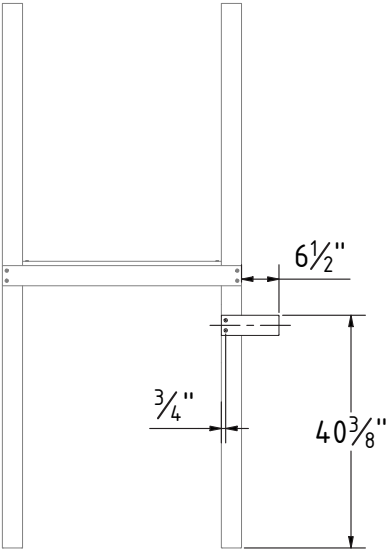

O35	4,5x50
0.75 x 3.5 x 34.5"	T20
1x	4x

2 Shop

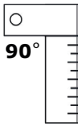

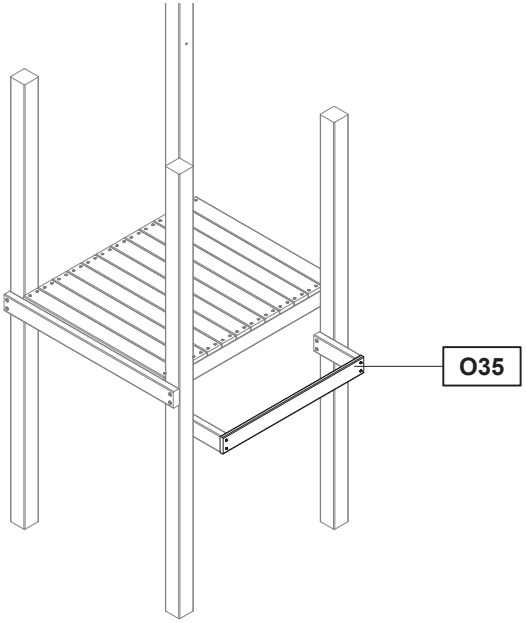

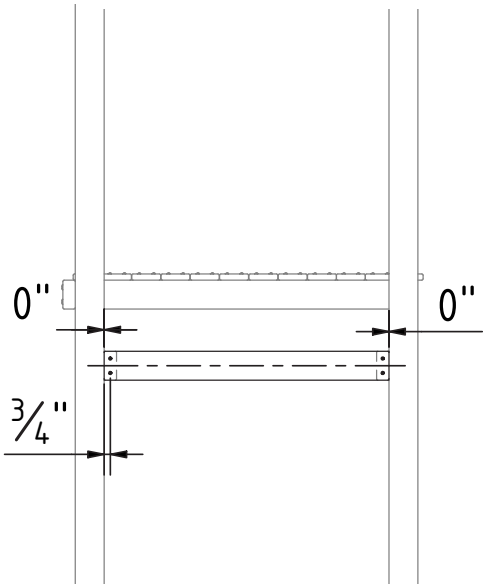

Tarp	5x20 PZ 2	Washer
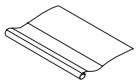		
1x	6x	6x

3 Shop

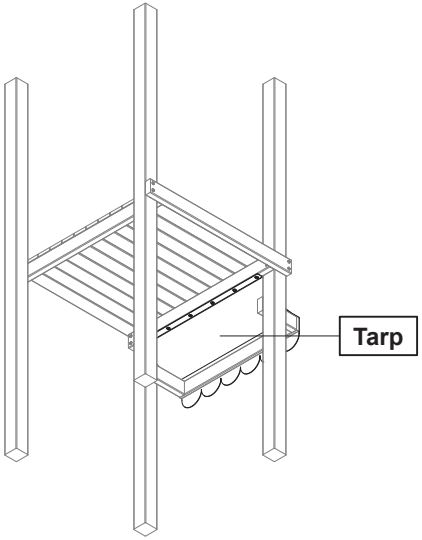

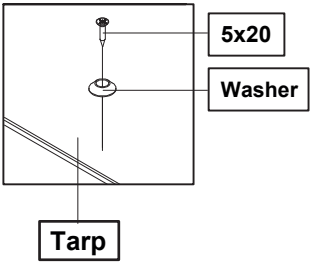

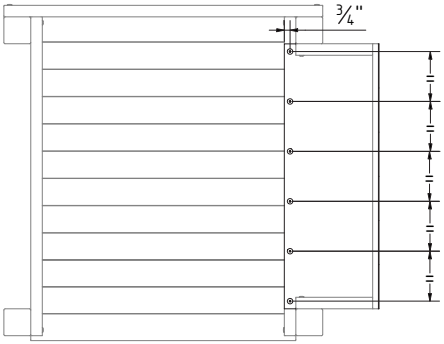

5x20 PZ 2	Washer
8x	**8x**

4 Shop

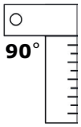

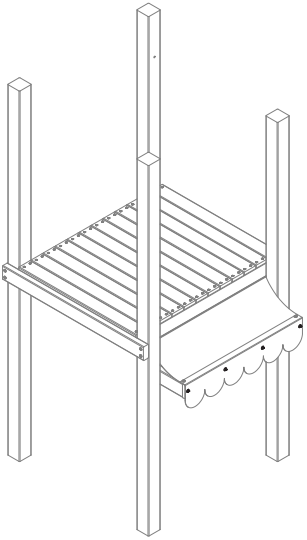

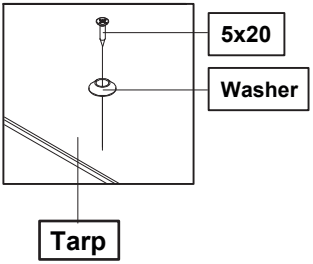

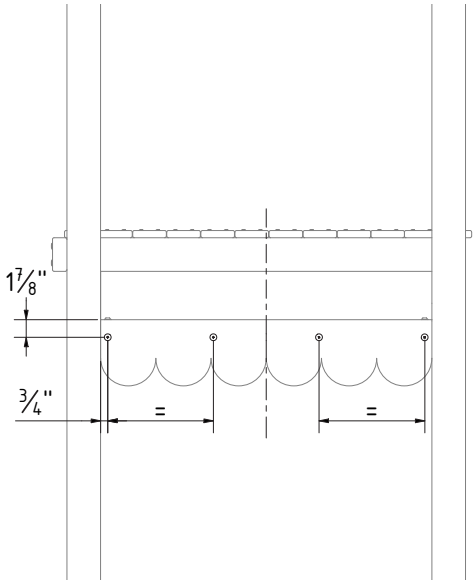

T42A 1.5 x 3.5 x 41.5"	5x20 PZ 2	Washer
1x	**2x**	**4x**

1 Shop Wall

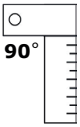

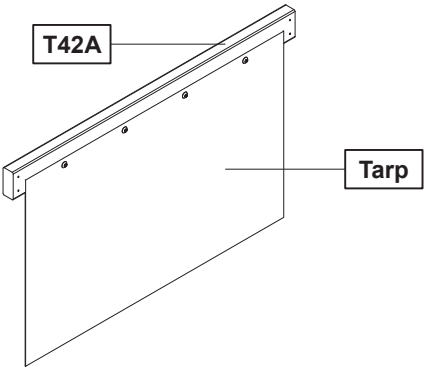

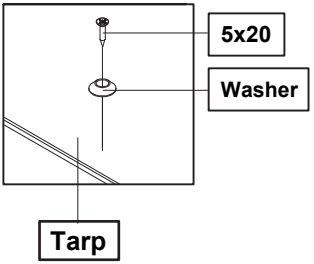

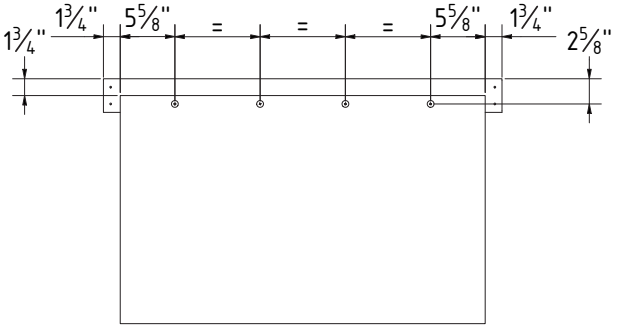

6x70	5x20	Washer
T30	PZ 2	
4x	6x	6x

2 Shop Wall

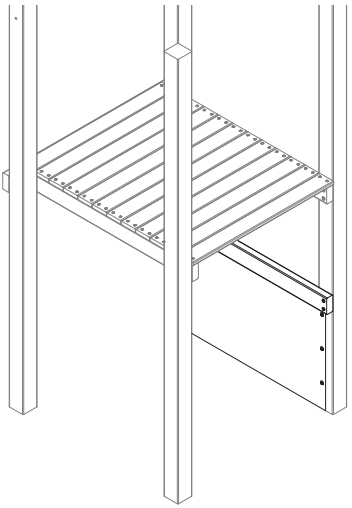

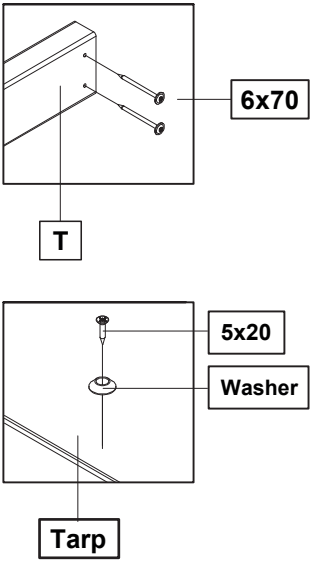

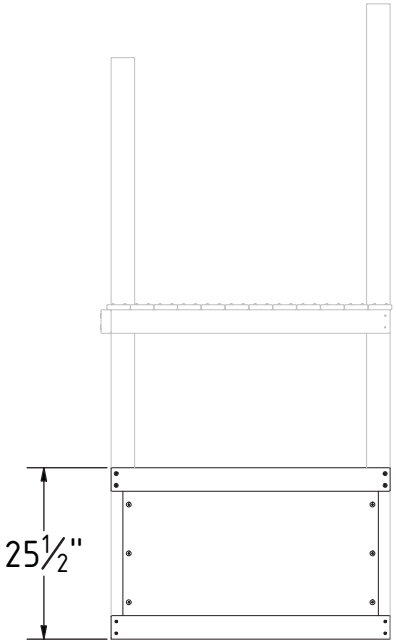

O35A	4,5x50
0.75 x 3.5 x 34.5”	T20
2x	8x

3 Shop Wall

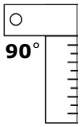

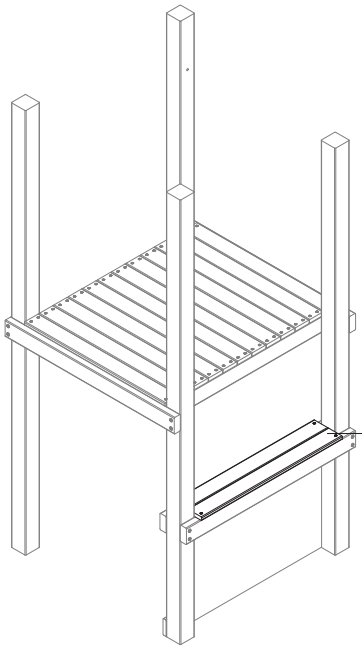

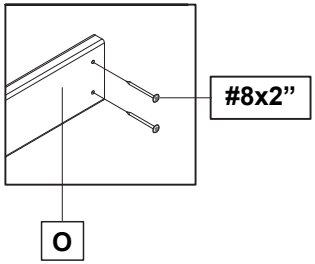

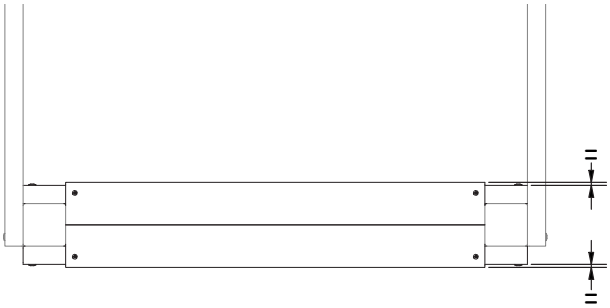

T42A	6x70
1.5 x 3.5 x 41.5"	T30
2x	8x

1 Hammock

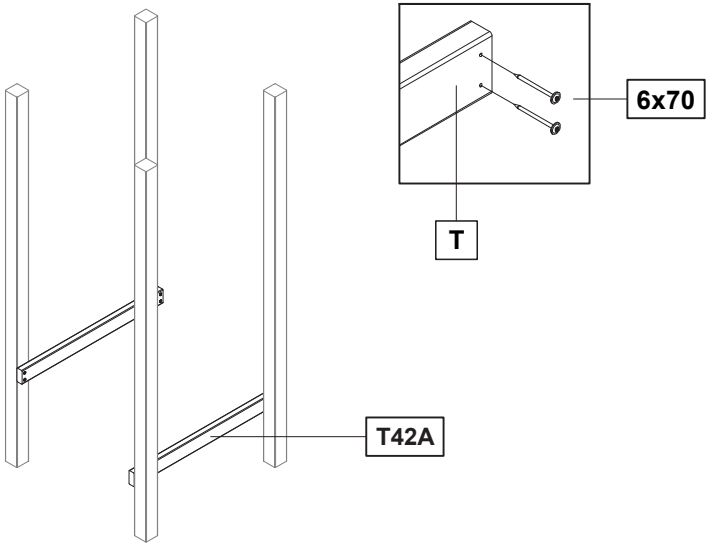

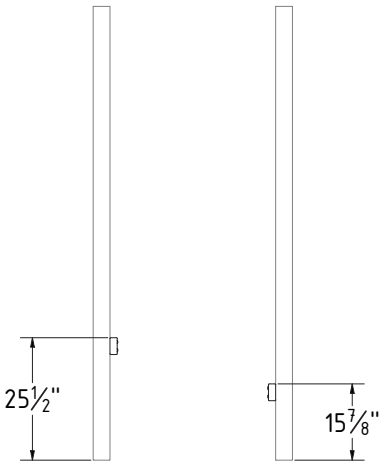

Tarp	5x20 PZ 2	Washer
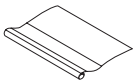		
1x	**12x**	**12x**

2 Hammock

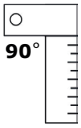

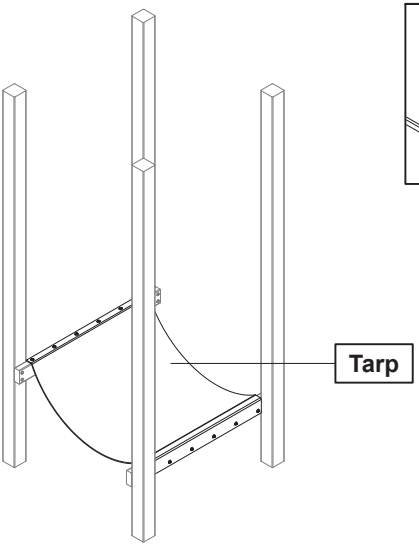

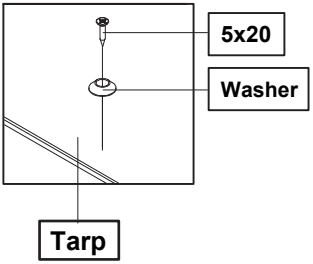

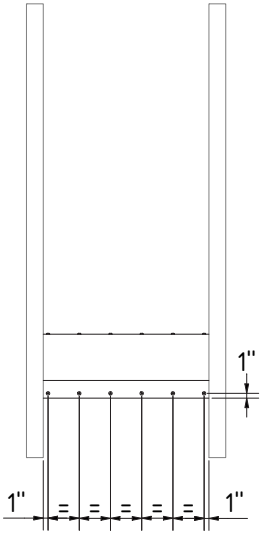

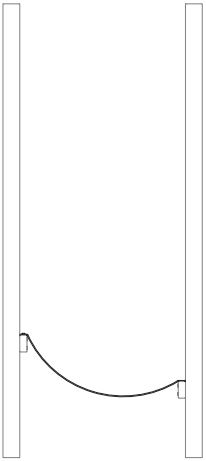

T10	Grips
1.5 x 3.5 x 9.5”	
4x	4x

1 Monkeygrips

4x

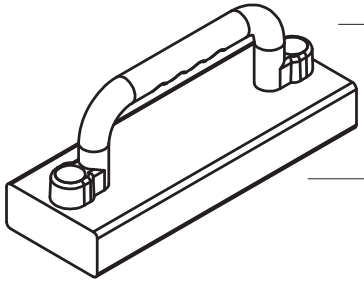

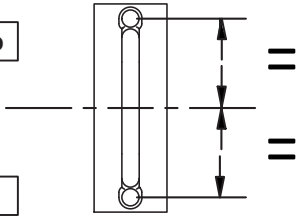

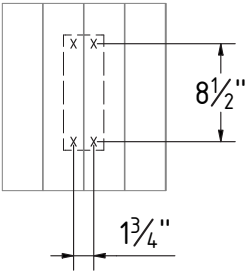

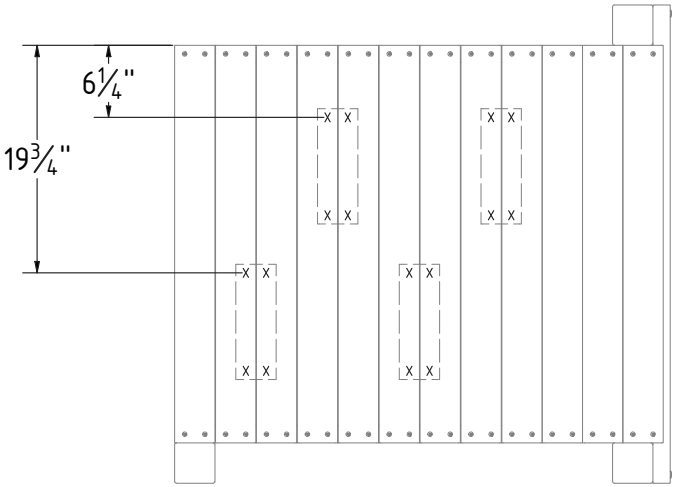

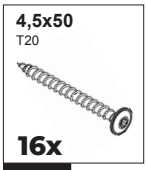

2 Monkeygrips

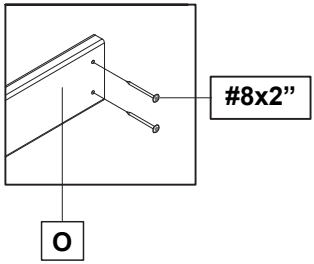

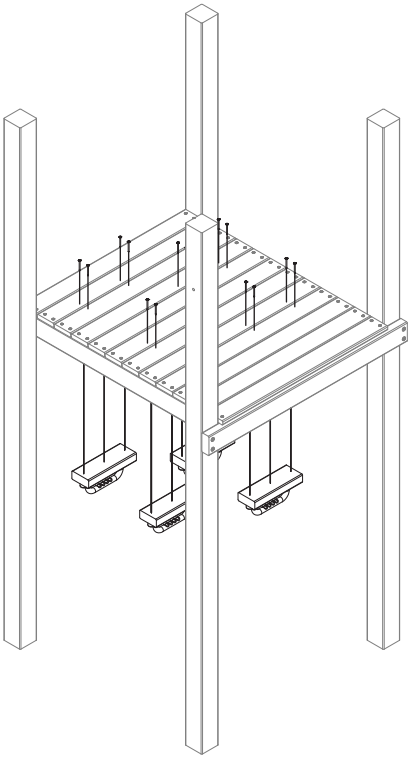

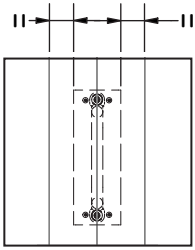

F65A
3.5 x 3.5 x 65"

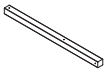

1x

2 Ropeladder

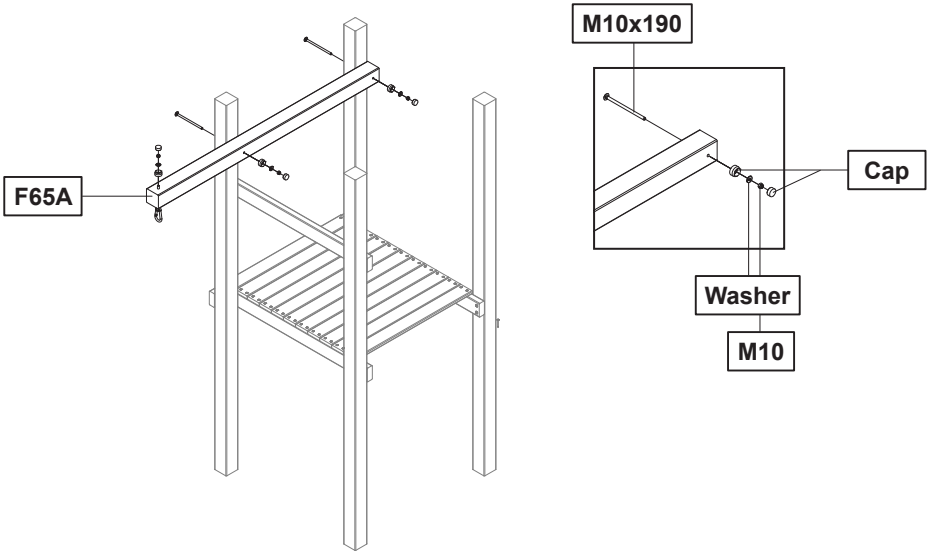

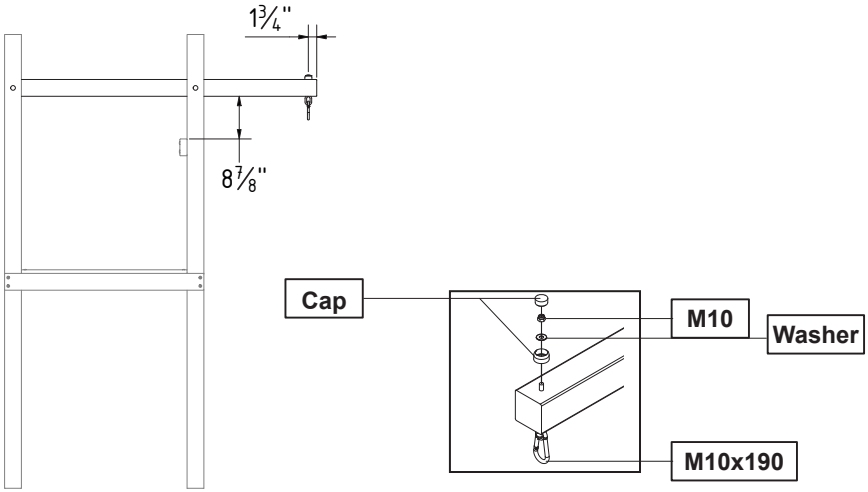

1 Slide

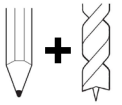

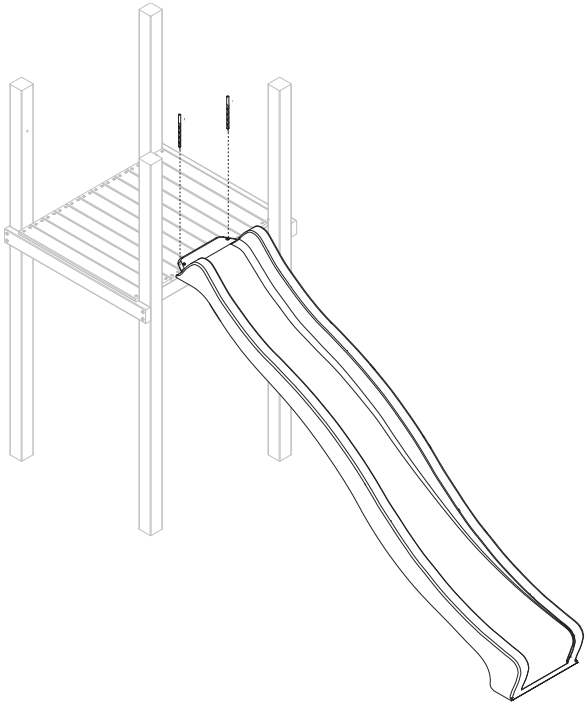

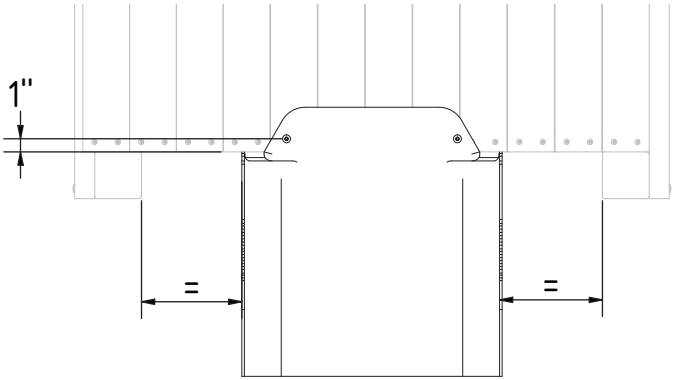

2 Slide

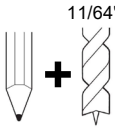

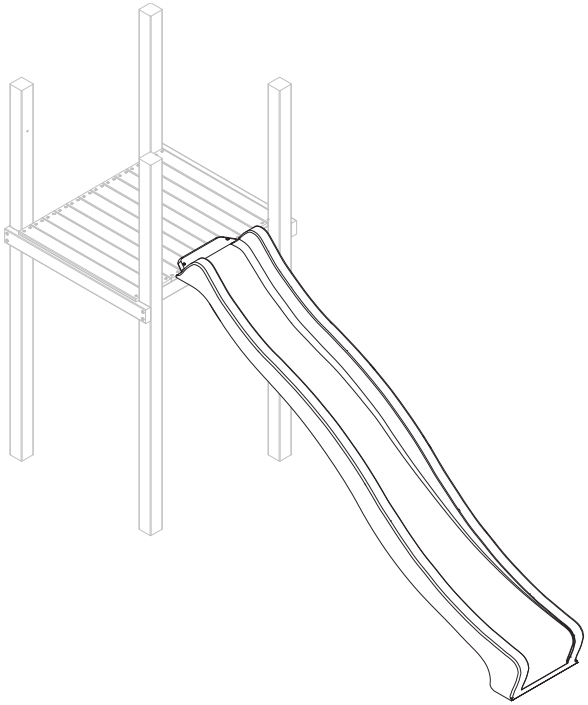

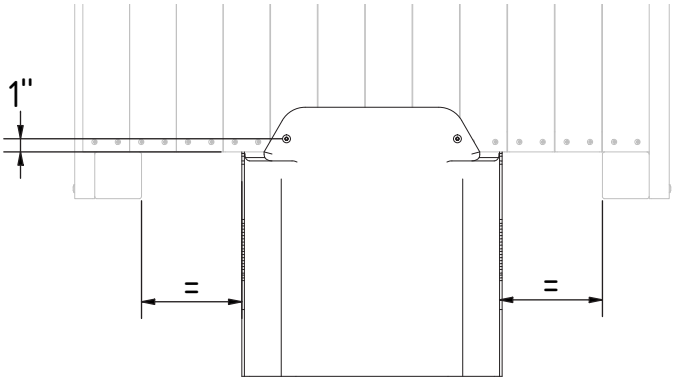

Tarp	5x20 PZ 2	Washer
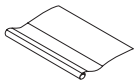		
1x	3x	3x
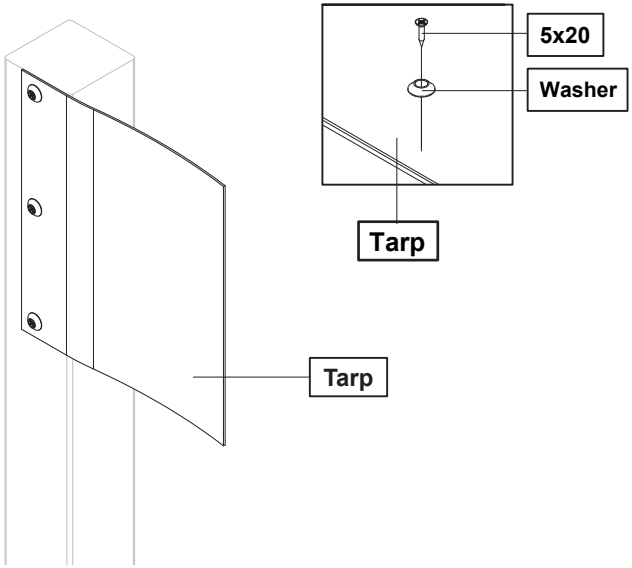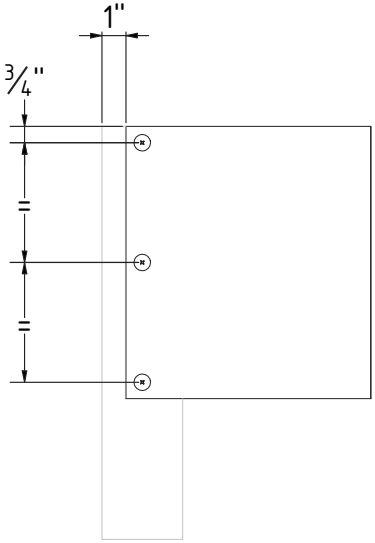
1 Flag