Residential Use Only

THIS PRODUCT IS INTENDED FOR USE BY CHILDREN FROM AGES 3 TO 14

SAVE THESE INSTRUCTIONS

CrazyCoconut

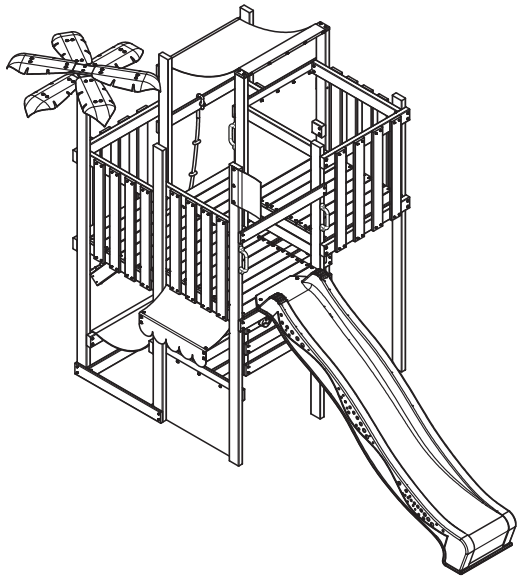

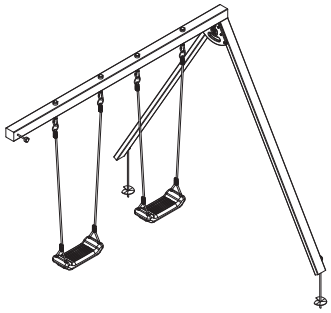

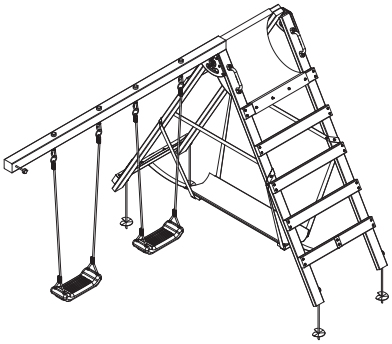

Warning! Choking Hazard - Small parts! Only for domestic use. For outdoor use only. Product must be assembled by an adult. Customer must keep this information

0-3 **Ages 3-14**

max. **100 kg**

© Wickey Corporation . Copyrighted material. Do not reproduce under penalty of law.

202501 V100

Page intended to be empty

PRODUCT REGISTRATION

3 EASY WAYS TO REGISTER

OPTION 1	OPTION 2
Scan the QR Code:	Make a photo of the completed registration card and sent it by e-mail to: **info@wickey.com**
	OPTION 3
	Mail the completed form to: **Wickey Corporation 4001 Calhoun Ave, Chattanooga TN 37407**

Where did you buy this product?

_____

Date of Purchase Store Store City Store State

Your registration information:

Name: _____ Email: _____

Address: _____

Street City State Zip

Please select your age: ☐ 18-30 ☐ 41-50 ☐ 31-40 ☐ 51+

How old are your children? ☐ 2-3 ☐ 6-7 ☐ 4-5 ☐ 8+

Number of children ☐

How would you rate the quality of this product?

☐ ★★★★★ Excellent
☐ ★★★★ Above Average
☐ ★★★ Average
☐ ★★ Below Average
☐ ★ Poor

Would you recommend this product to friends & family? ☐ Yes ☐ No

May we add you to our mailing list? ☐ Yes ☐ No

May we use your comments on websites or other marketing materials? ☐ Yes ☐ No

Comments: _____

_____

_____

_____

SAFETY CHECKS AND MAINTAINENCE INSTRUCTIONS

OBSERVING THE FOLLOWING STATEMENTS AND WARNINGS REDUCES THE LIKELIHOOD OF SERIOUS OR FATAL INJURY

WARNING

ADULT SUPERVISION REQUIRE. On-site supervision is required anytime a play set is being used.

WARNING

ADULT ASSEMBLY REQUIRED. KEEP AWAY FROM CHILDREN UNTIL ASSEMBLED AND ANCHORED. Product prior to assembly contains sharp points, sharp edges and small parts.

WARNING

FOLLOW ASSEMBLY INSTRUCTIONS. Product must be assembled an anchored on a suitable level surface as instructed (see section X for Assembly Instructions).

WARNING

ENSURE SAFE DISTANCES. Choose a location that allows for minimum safe distances from objects like trees, large rocks, fences, as instructed (see section X for Assembly Instructions for safe distances).

WARNING

WEIGHT CAPACITY. Adhere to all recommendations for number of users and equipment weight limits.
Max 9 occupants (xxx lbs) on the elevated fort platform.
Max 2 occupants (xxx lbs) on the swings.
Total capacity: 11 occupants (xxx lbs)

WARNING

DO NOT MODIFY EQUIPMENT. Never add extra length to chain or rope. The chains or ropes provided are the maximum length designed for the swinging element(s).

WARNING

Ensure suspended climbing ropes, chains, and cables are securely fastened at both ends and cannot be looped back onto themselves.

WARNING

Playground equipment and/or surfacing in direct sunlight may reach temperatures high enough to cause serious burn injuries within seconds. Check for hot play surfaces and surfacing before letting children play.

WARNING

Children must be taught safe use practices, including:

- Do not use equipment in a manner other than intended.
- Do not get off equipment while it is in motion.
- Do not walk close to, in front of, behind, or between moving items.
- Do not attach items to the playground equipment that are not specifically designed for use with the equipment, such as, but not limited to jump ropes, clothesline, pet leashes, cables and chain as they may cause a strangulation hazard.

SWING SAFETY WARNING

Failure to follow the below safe practices can result in serious injury.

Children must be taught to:

- Seat themselves safely, children must sit with full weight in the swing seat center.
- Not to stand on swings.
- Not to jump from moving swings.
- Not push empty swings - they can cause injury to themselves or others.
- Not to twist or loop chains/ropes over beams - this weakens them.
- Never wrap arms or legs around swing chains.
- Never slide down a swing chain.

SLIDE SAFETY WARNING

Failure to follow the below safe practices can result in serious injury.

Children must be taught to:

- Always go down slide feet first, never headfirst.
- Look before sliding to ensure no one is at the bottom.
- Never run up a slide—this increases fall risk.

FORT AND CLIMBING WARNING

Failure to follow the below safe practices can result in serious injury.

Children must be taught to:

- Not climb when the equipment is wet.
- Never jump from a fort deck—always use the ladder, ramp, or slide.
- Never crawl or walk across the top of equipment.
- Never crawl on top of a fort roof.
- Never look at the sun through accessories like telescopes, periscopes, or binoculars.

PROPER DRESS WARNING

Failure to follow the below safe practices can result in serious injury.

- Children must wear well-fitting shoes that completely enclose feet; no clogs, flip-flops, or sandals.

- DO NOT allow children to wear inappropriate items, such as but not limited to, loose fitting clothing, hood and neck drawstrings, scarves, cord-connected items, capes and ponchos. These items can cause death by strangulation.

- Teach children to remove bike or sports helmets before playing on the playground. These items can cause death by strangulation.

SAFETY CHECKS AND MAINTAINENCE INSTRUCTIONS

Before each play session

- Tighten all hardware but avoid over-tightening to prevent wood from cracking.
- Lubricate all metallic moving parts as needed (See “2.2 Lubrication of Moving Components”).
- Inspect protective coverings on bolts, pipes, edges, and corners. Replace any that are loose, cracked, or missing.
- Check all moving parts—swing seats, ropes, cables, and chains-for wear, rust, or damage. Replace as needed. Replace any swing seat with cracks.
- Inspect metal parts for rust. If found, sand and repaint with a non-lead-based paint.
- Examine wood components for deterioration and splinters. Sand down splinters and replace deteriorated wood. Apply a protective sealant once or twice a year, as required by the warranty (See “2.3 Applying Protective Sealant”).
- Reinstall plastic parts, such as swing seats, that were removed for winter storage.
- Rake and check the depth of loose-fill protective surfacing to prevent compaction and maintain proper cushioning. Replenish as needed.
- Ensure the playset remains level. As children play, the set may shift into the soil-adjust as necessary to keep it stable.
- Ensure legibility of safety warnings.
- Ensure suspended climbing ropes, chains, and cables are securely fastened at both ends and cannot be looped back onto themselves.
- Ensure equipment has not been modified in anyway.
- On sunny and or hot days, skin contacting plastic surfaces (e.g., slides and swing seats) very hot plastic surfaces can cause burns. If needed cool with water prior to use.

After each play session:

- Check for any damaged components, splinters, or cracks.
- Ensure all protective coverings are still in place.
- Ensure all moving components function as intended.

SAFETY CHECKS AND MAINTAINENCE INSTRUCTIONS

Twice a month during play session:

- Tighten all hardware but avoid over-tightening to prevent wood from cracking.
- Check all moving parts—swing seats, ropes, cables, and chains - for wear, rust, or damage.
- Replace as needed. Replace any swing seat with cracks.
- Rake and check the depth of loose-fill protective surfacing to prevent compaction and maintain proper cushioning. Replenish as needed.

Once a month during play session:

- Lubricate all metallic moving parts as needed (See “1.2 Lubrication of Moving Components”).
- Check all moving parts-swing seats, ropes, cables, and chains - for wear, rust, or damage. Replace as needed. Replace any swing seat with cracks.

When temperature drops below 32 degrees Fahrenheit:

- Remove plastic swing seats and other specified items per the manufacturer’s instruction. Store indoors or discontinue use.

At the end of each play season:

- Remove plastic swing seats and other specified items per the manufacturer’s instructions. Store indoors or discontinue use.
- Rake and check the depth of loose-fill protective surfacing to prevent compaction and maintain proper cushioning. Replenish as needed.
- Ensure warning labels remain legible and replace them if they become worn or unreadable.

Lubrication of Moving Components

- Use a metal-safe lubricant like WD-40 on all metallic moving parts.
- Avoid using WD-40 on non-metal components, as it may cause damage.
- For non-metal parts (e.g., plastic), use a plastic-compatible lubricant such as silicone lubricant.
- Follow the lubricant manufacturer’s application instructions.
- Apply lubricant sparingly to prevent buildup.
- Wipe off excess lubricant to avoid attracting dirt and debris.

SAFETY CHECKS AND MAINTAINENCE INSTRUCTIONS

Applying Protective Sealant

- Pressure-treated wood must be fully dry before applying a sealer. Depending on the climate, this drying process can take anywhere from a few weeks to several months.

- A simple way to check if the wood is ready for sealing is the “bead test.” Pour a small amount of water onto a horizontal surface. If the water beads up, the wood still contains moisture. If the wood absorbs the water, it is dry enough to be sealed.

- Before sealing, ensure all surfaces are clean, dry, dust-free, and free from any contaminants that could interfere with adhesion.

- Use a sealant specifically recommended for pressure-treated wood and suited to your climate conditions.

Safe Deconstruction and Disposal Instructions

- Keep Children Away: Do not let children play on the playground while dissembling

- Disassemble Safely: Wear proper personal protective equipment (PPE) and start from the top and work downward, removing non-structural components first (e.g., swings, climbing rope, ladder). Identify and support load-bearing components before removing them to prevent collapse, especially on multi-level structures.

- Check for Sharp Points or Edges: Ensure de-construction hasn’t resulted in accessible sharp points and edges, check for and safely dispose of any hardware.
- Do Not Burn Treated Wood: Burning releases harmful chemicals into the air and environment.

- Check Local Disposal Rules: Contact local waste management to determine proper disposal options for treated wood.

- Avoid Composting or Chipping: Do not compost or chip treated wood, as it can release chemicals into the soil.

SAFETY CHECKS AND MAINTAINENCE INSTRUCTIONS

WARNING
CONTINUOUS ADULT SUPERVISION REQUIRED!
STRANGULATION HAZARD

Never allow children to wear bike or sport helmets when using this playset.
Never allow children to play with ropes, clotheslines, pet leashes, cable, chains, or cord-like items when using the playset or to attach these items to the playset.
Never allow children to wear loose-fitting clothing, ponchos, hoods, scarves, capes, necklaces, flip-flops, sandals, or items with drawstrings, cords, or ties when using this playset.

Failure to prohibit these items increases the risk of serious injury and death to children from entanglement and strangulation.

SERIOUS HEAD INJURY HAZARD

- Installation over hard surfaces creates a risk of serious injury or death from falls to the ground. Maintain shock-absorbing material under and around the playset as recommended in the Installation and Operating instructions.

SERIOUS BURN HAZARD

- Playground equipment and/or surfacing in direct sunlight may reach temperatures high enough to cause serious burn injuries within seconds. Check for hot play surfaces and surfacing before letting children play.

- Refer to the instructions for the maximum number of users, installation, and operating instructions.

SAFETY CHECKS AND MAINTAINENCE INSTRUCTIONS

PLAYGROUND SITE SELECTION AND PROTECTIVE SURFACING

WARNING: PROPER SITE SELECTION AND INSTALL PROTECTIVE SURFACING DOES NOT ELIMINATE THE NEED FOR ADULT SUPERVISION AND TEACHING CHILDREN SAFE PLAY PRACTICES.

- Site Selection: Place the equipment on level ground, not less than 6 ft (1.8 m) from any structure or obstruction such as a fence, garage, house, overhanging branches, laundry lines, or electrical wires (see “Playground Site Diagram”).
- Remove any objects from areas where users might run into, trip, or land when falling or exiting the equipment.
- If site is not level, professional grading may be needed.
- Placement of Protective Surfacing:
- NOTE: MAXIMUM FALL HEIGHT = 76.529"

WARNING: INSTALL PROTECTIVE SURFACING

It is critical that all areas where a child may fall onto or exit equipment is covered with adequate protective surfacing to minimize injury (see “Playground Site Diagram”)

- For Stationary Climbing Equipment and Slides: At a minimum install protective surfacing at least 6 feet in every direction from the equipment’s perimeter.

- For Swings: Extend protective surfacing in front and behind the swing to at least twice the height of the swing (measured from the ground to the top of the support structure).

- Depth of Protective Surfacing Material:

- For equipment up to 60 in./1524 mm tall: Use at least 9 in. (229 mm) of sand or pea gravel.
- For taller equipment (up to 96 in./2438 mm): Use at least 9 in. (229 mm) of loose-fill material such as wood mulch/chips, engineered wood fiber (EWF), or shredded/recycled rubber mulch.

SAFETY CHECKS AND MAINTAINENCE INSTRUCTIONS

- For equipment less than 48 in. (1219 mm) tall: Use a minimum of 6 in. (152 mm) of protective surfacing. (Less than 6 in. will be too easily displaced or compacted.)
- Initial Fill and Maintenance:
- Although you might start with a 12 in. (305 mm) layer, it will compress to about 9 in. (229 mm) over time.
- Because the material will naturally compact, settle, and shift, check it periodically and refill as needed to maintain the minimum depth.
- Periodically rake, check and maintain the depth of the loose-fill surfacing material. Marking the correct depth on the play equipment support posts will help you to see when the material has settled and needs to be raked and or replenished. Be sure to rake and evenly redistribute the surfacing in heavily used areas.
- Installation Surface Requirements

WARNING: Do Not Install Over Hard Surfaces
DO NOT place equipment on concrete, asphalt, or similar hard surfaces—these can increase injury risks if a fall occurs.

Use Proper Surfacing Material: Grass and dirt are not acceptable as protective surfacing since environmental wear reduces their shock-absorbing effectiveness. Carpeting and thin mats generally do not provide adequate protection.

- Exception for Ground-Level Equipment: Items such as sandboxes, activity walls, or playhouses that have no elevated play surface do not require protective surfacing.

- Containment and Drainage: Use containment, such as digging out around the perimeter and/or lining the perimeter with landscape edging. Don't forget to account for water drainage.

- Poured-In-Place Surfaces or Pre-Manufactured Rubber Tiles:

- These alternatives generally require professional installation—this is typically not a do-it-yourself project.

Marking predrilling

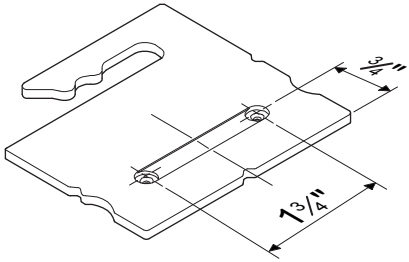

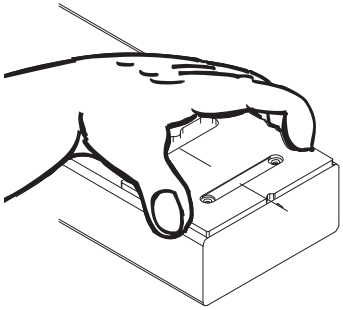

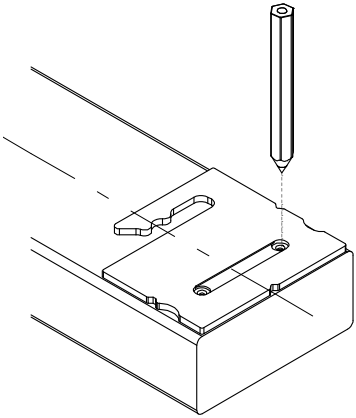

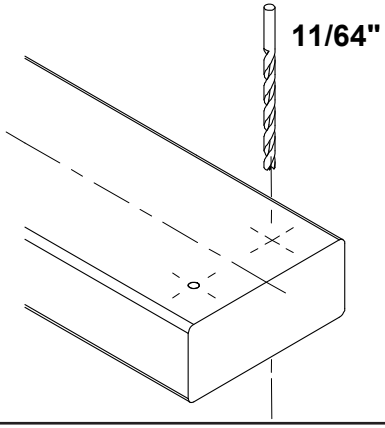

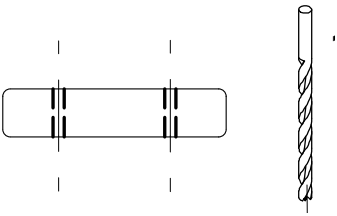

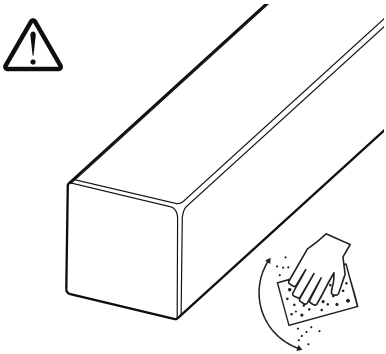

Sand end cut to Radius 1/8”

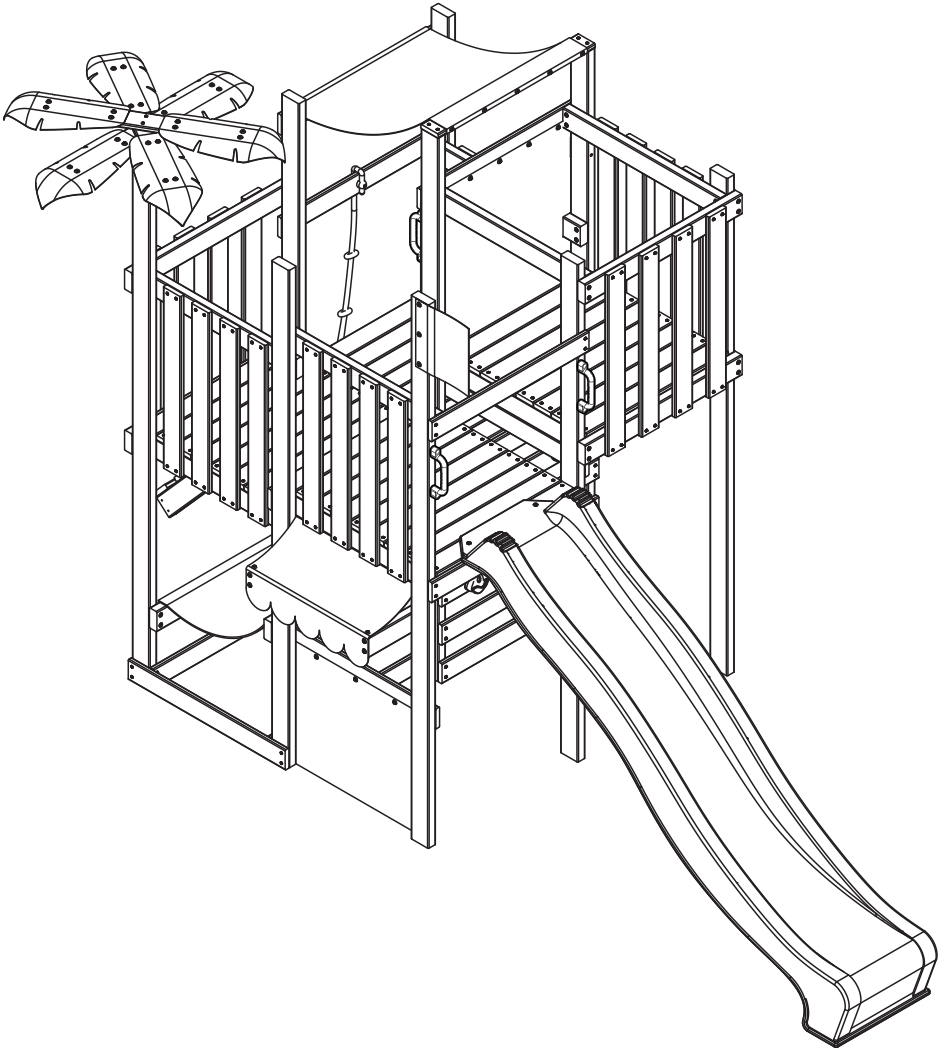

P Partlist

T95A 1.5 x 3.5 x 94.5” **1x**	**T95** 1.5 x 3.5 x 94.5” **3x**	**T87** 1.5 x 3.5 x 86.5” **5x**	**T42A** 1.5 x 3.5 x 41.5” **2x**	**T32A** 1.5 x 3.5 x 31.5” **16x**	**O32A** 0.75 x 3.5 x 31.5” **48x**	**O29A** 0.75 x 3.5 x 28.5” **43x**
T10 1.5 x 3.5 x 9.5” **4x**	**6x70** T30 **84x**	**#8x2”** T20 **288x**	**5x20** PZ 2 **81x**	**Washer** **81x**	**Special Cap** **4x**	**Tarp Hammock** **1x**
Tarp Roof **1x**	**Tarp Wall** **1x**	**Tarp Shop** **1x**	**Tarp Palm** **1x**	**Tarp Flag** **1x**	**Slide 47** **1x**	**Rope** **1x**
Grips **4x**	**Wheel** **1x**	**Telescope** **1x**	**Climbingstone** **5x**	**Sticker** **1x**		

1 Tarp cutting plan

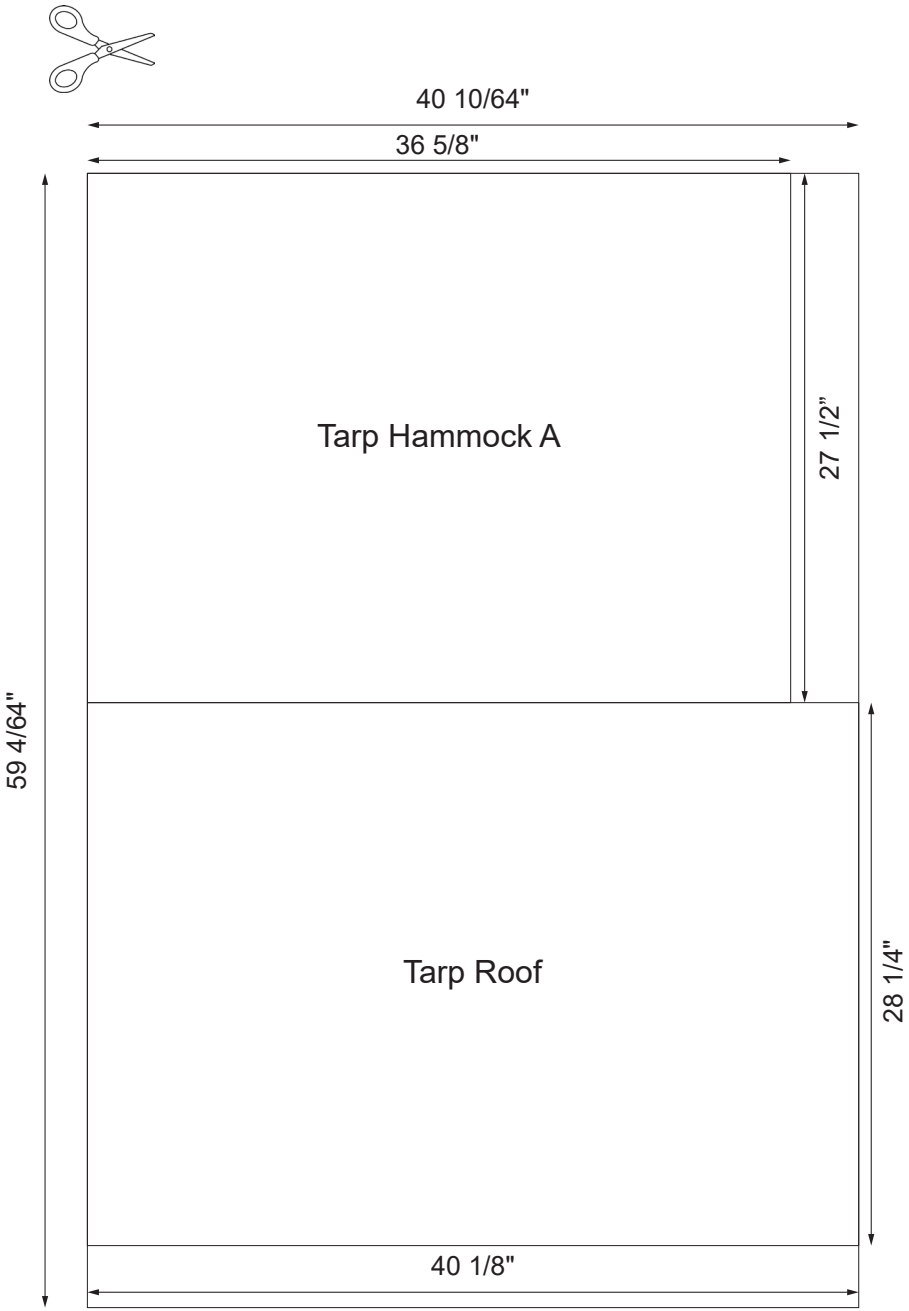

2 Tarp cutting plan

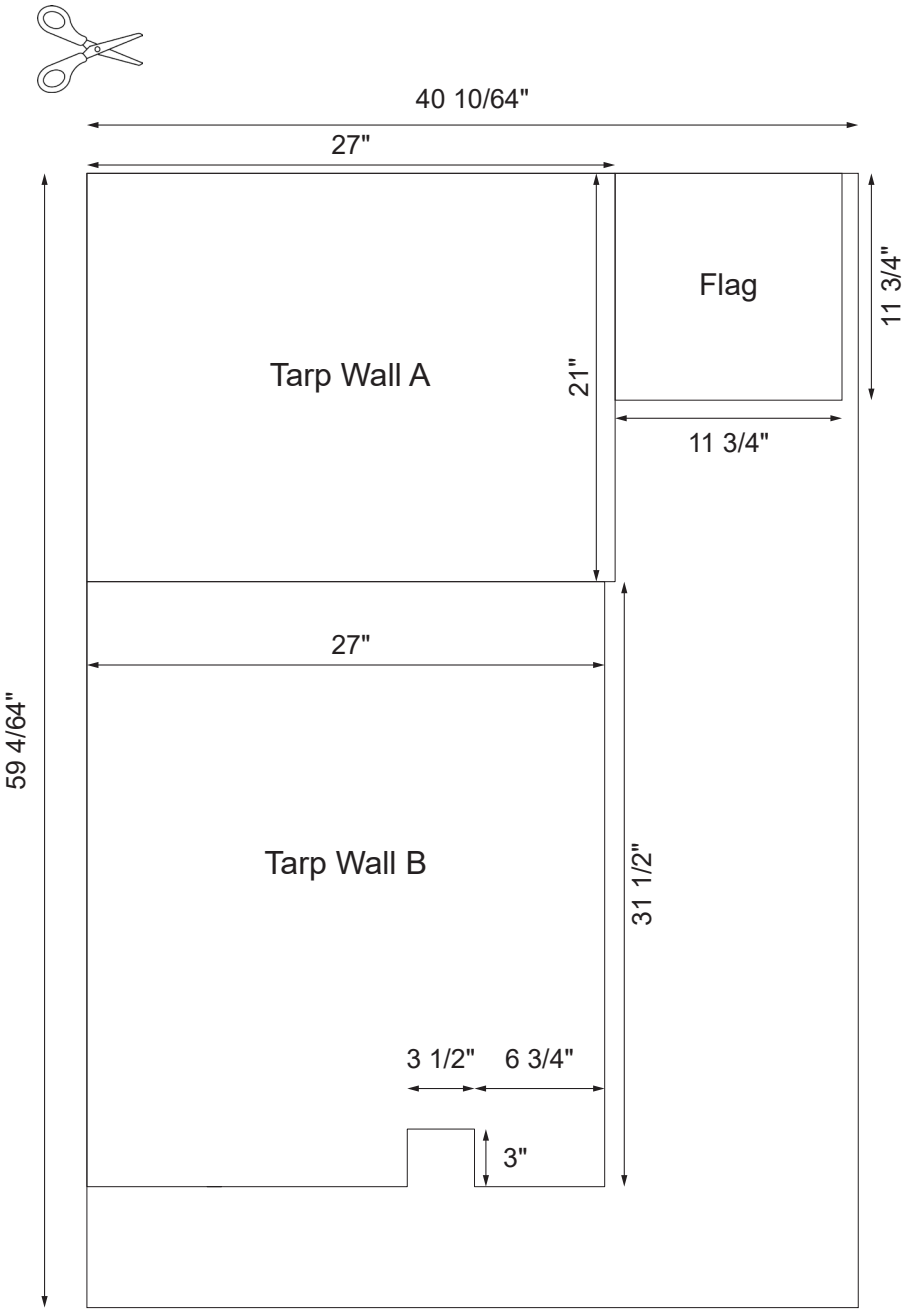

3 Tarp cutting plan

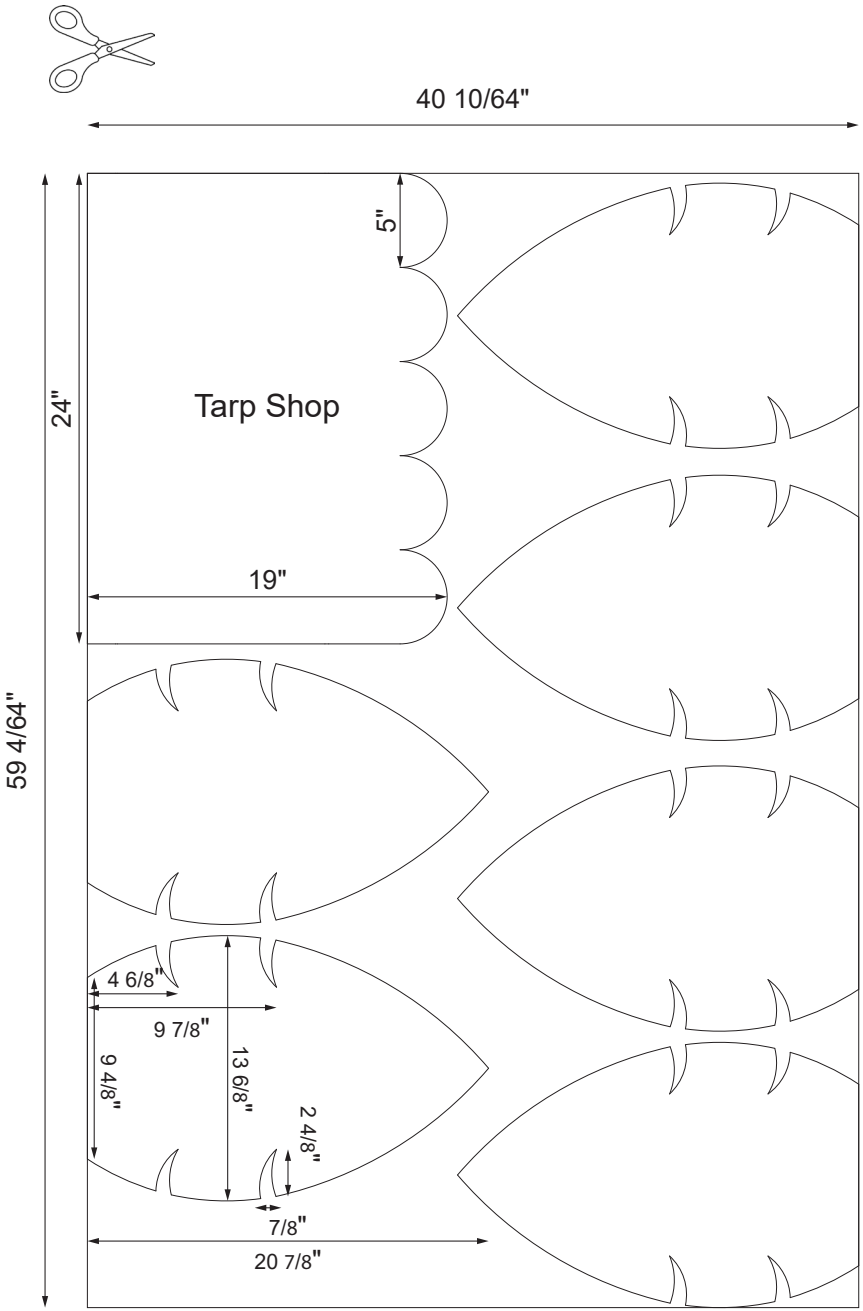

T95	T87	T32A	O32A	6x70	#8x2”
1.5 x 3.5 x 94.5”	1.5 x 3.5 x 86.5”	1.5 x 3.5 x 31.5”	0.75 x 3.5 x 31.5”	T30	T20
1x	**2x**	**4x**	**1x**	**16x**	**4x**

1 Frame 1

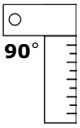

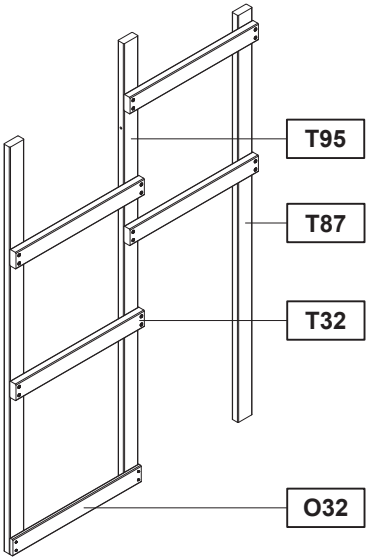

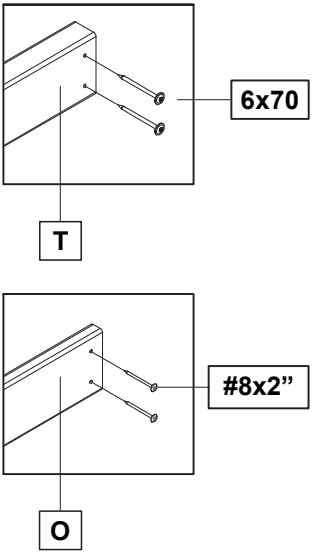

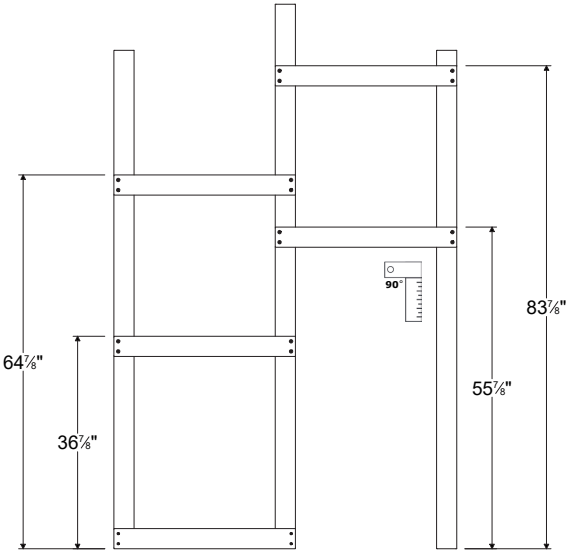

T95	T87	T32A	O32A	6x70	#8x2”
1.5 x 3.5 x 94.5”	1.5 x 3.5 x 86.5”	1.5 x 3.5 x 31.5”	0.75 x 3.5 x 31.5”	T30	T20
1x	2x	3x	1x	12x	4x

2 Frame 2

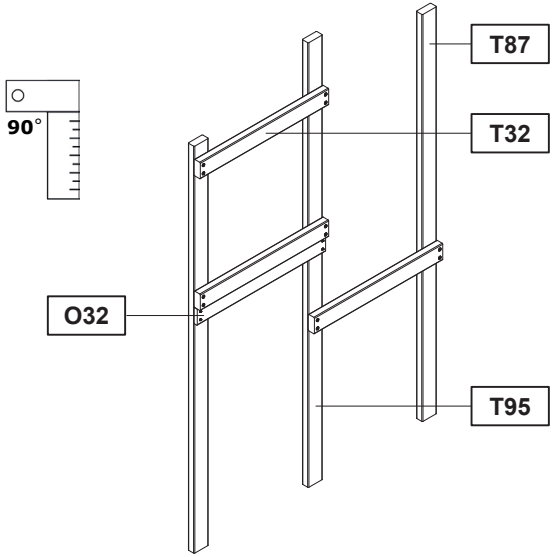

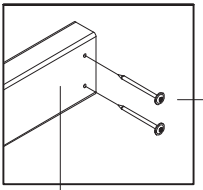

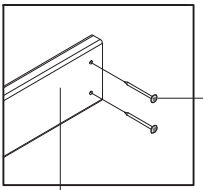

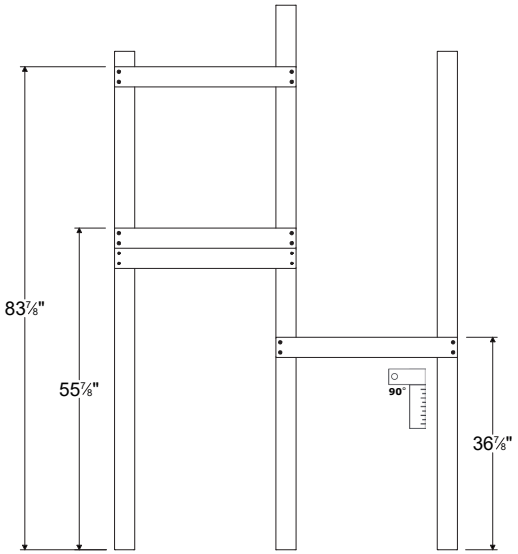

T32A	6x70
1.5 x 3.5 x 31.5"	T30
1x	4x

3 Frame 2 (rotated)

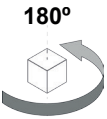

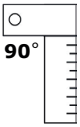

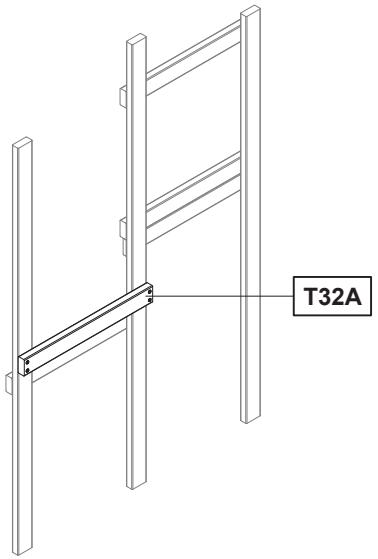

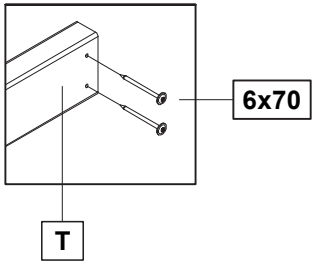

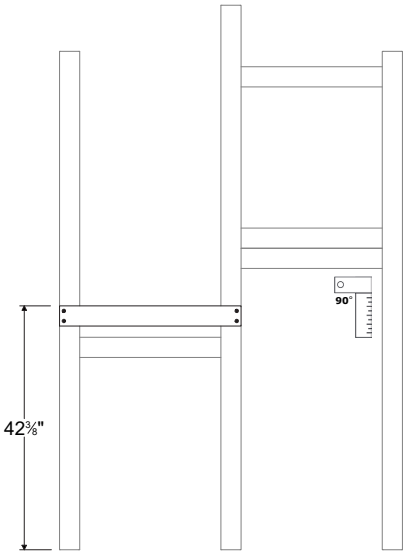

4

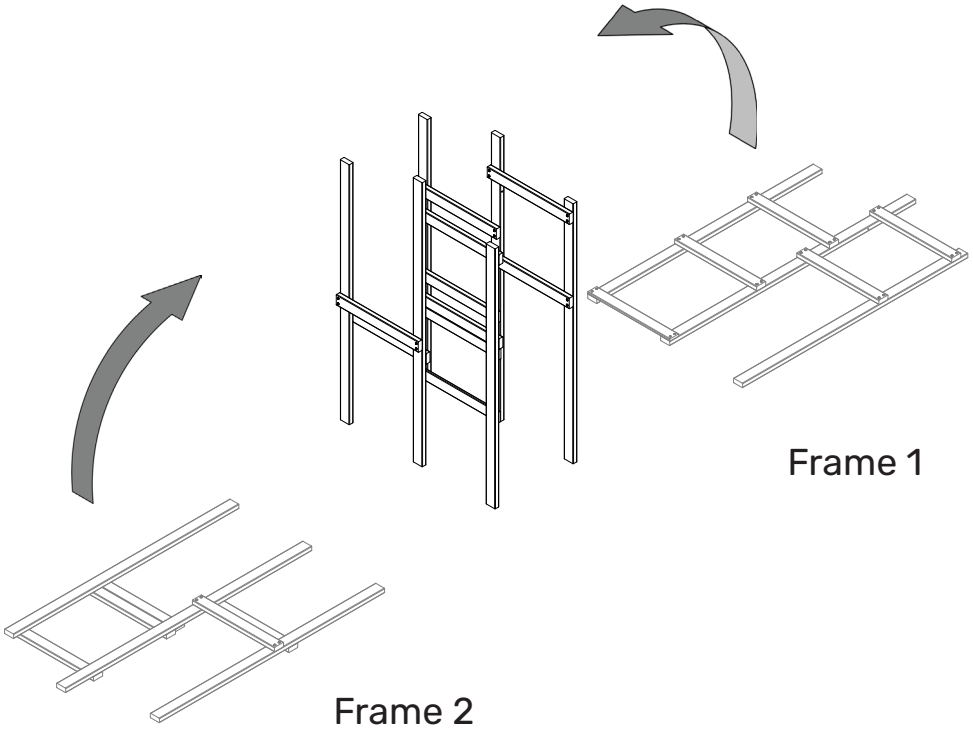

T32A	6x70
1.5 x 3.5 x 31.5"	T30
2x	8x

5

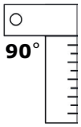

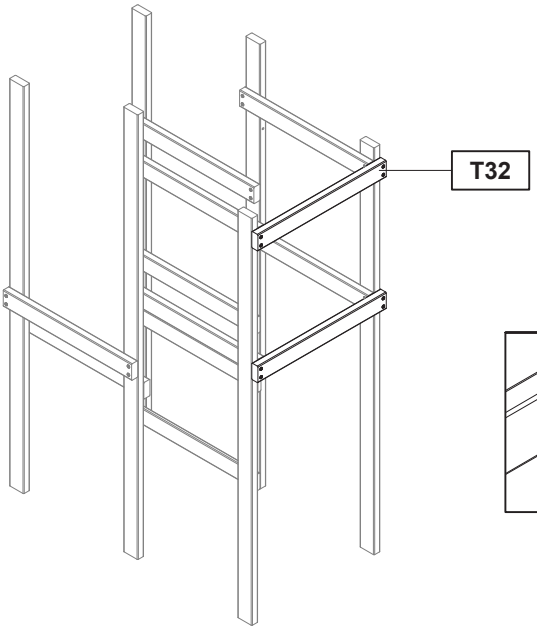

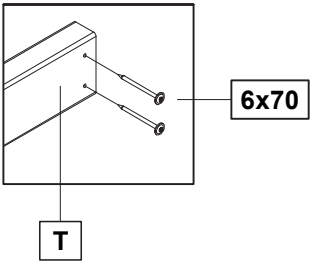

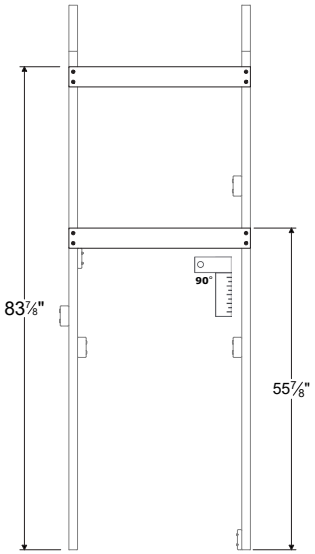

O32A	#8x2”
0.75 x 3.5 x 31.5”	T20
1x	4x

6

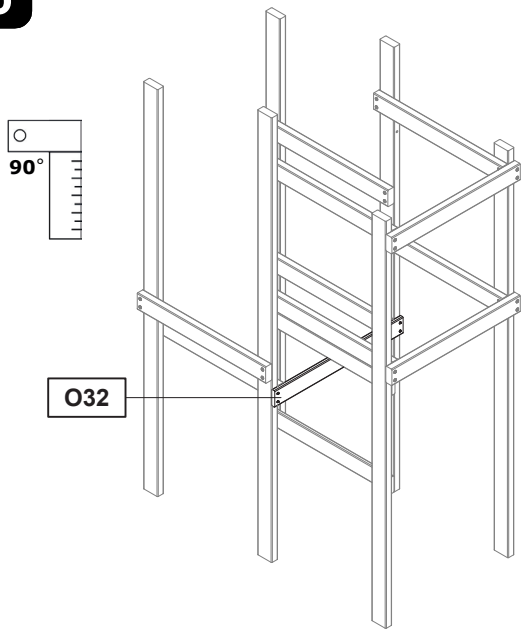

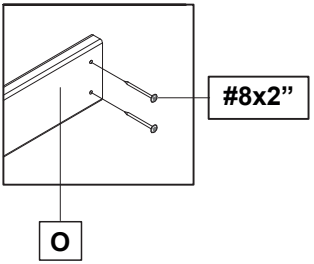

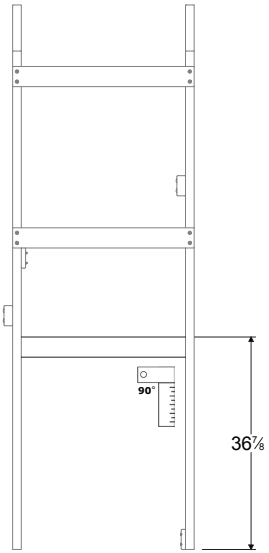

O32A	#8x2”
0.75 x 3.5 x 31.5”	T20
2x	8x

7

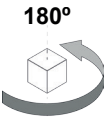

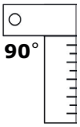

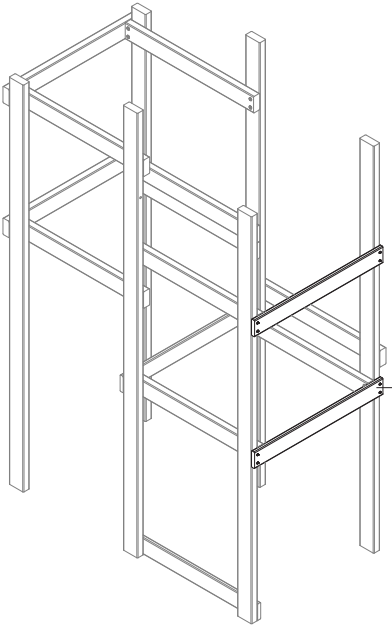

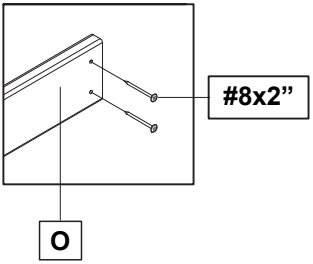

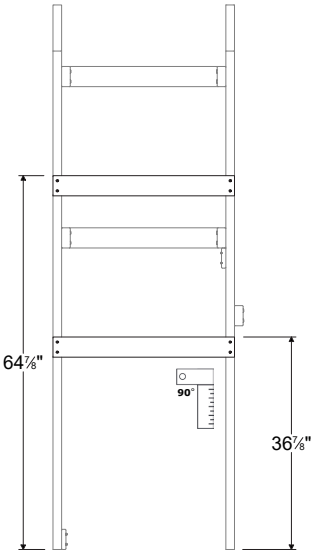

T95A	T87	T32A	6x70
1.5 x 3.5 x 94.5”	1.5 x 3.5 x 86.5”	1.5 x 3.5 x 31.5”	T30
2x	**1x**	**3x**	**12x**

8 Frame 3

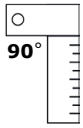

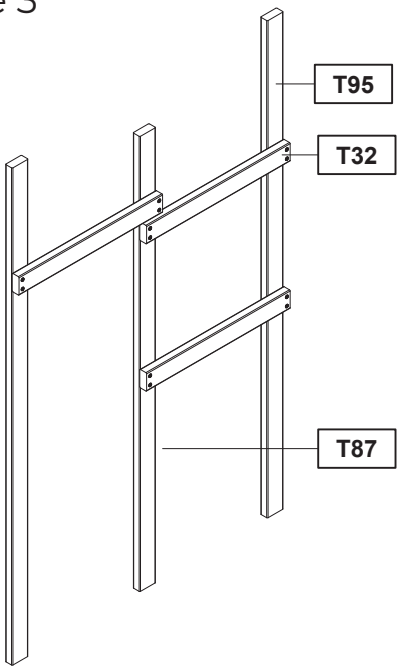

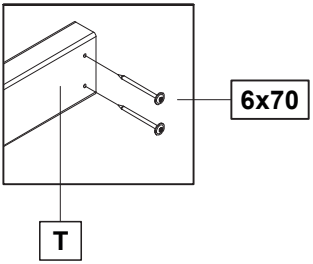

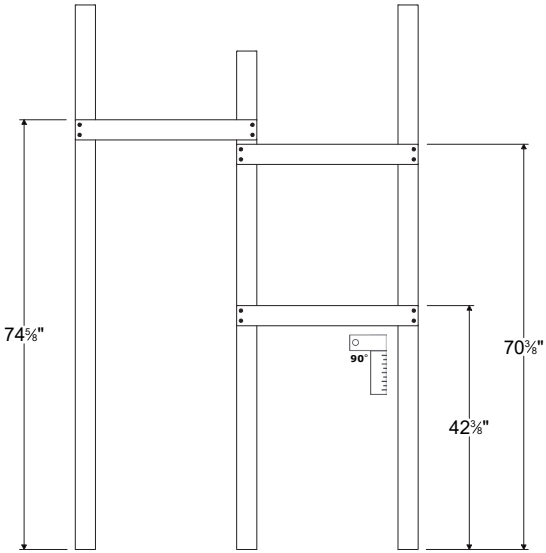

O32A	#8x2”
0.75 x 3.5 x 31.5”	T20
1x	4x

9 Frame 3 (rotated)

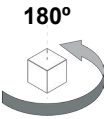

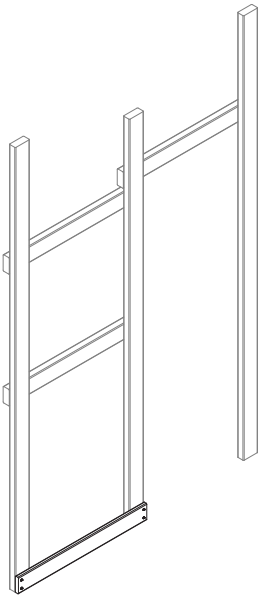

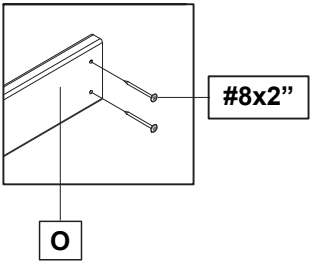

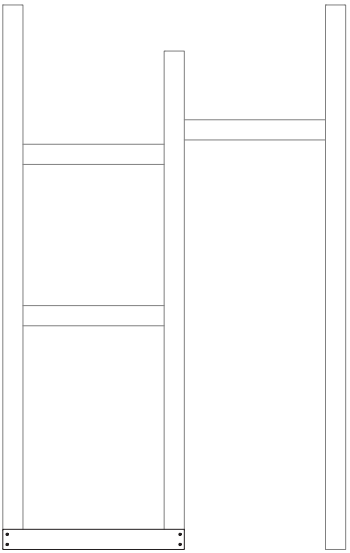

10

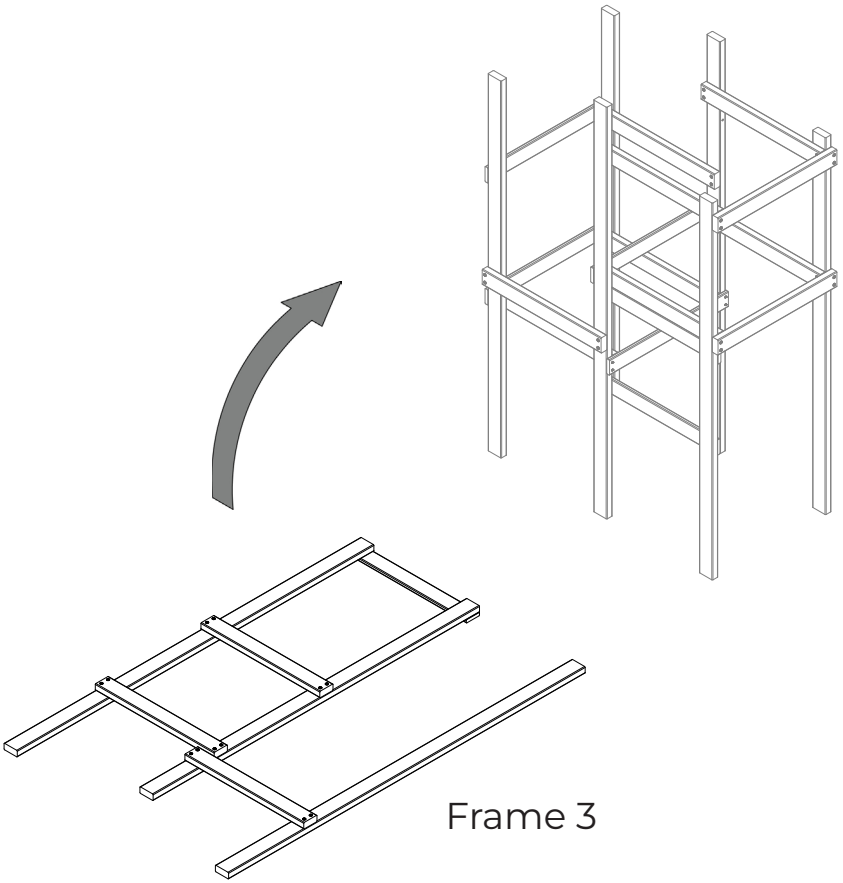

O32A	#8x2”
0.75 x 3.5 x 31.5”	T20
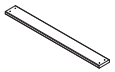	
2x	8x

11

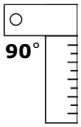

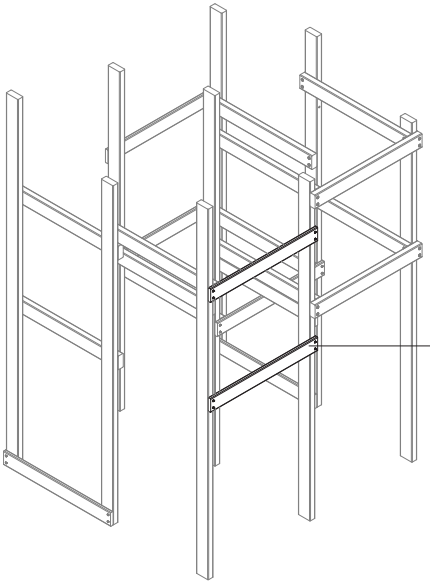

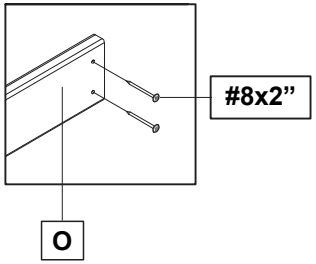

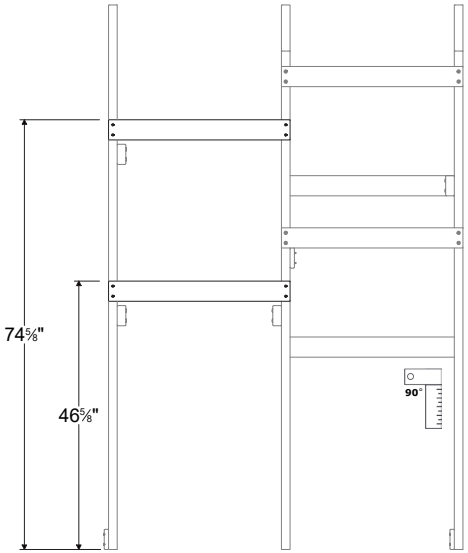

T32A	6x70
1.5 x 3.5 x 31.5"	T30
2x	8x

12

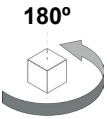

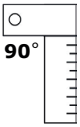

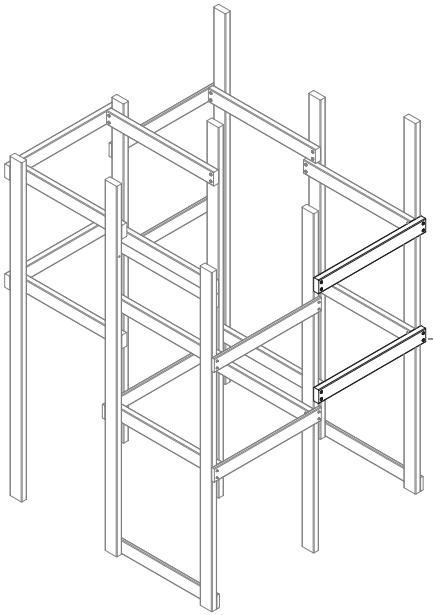

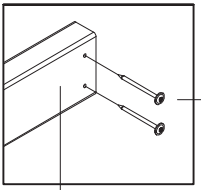

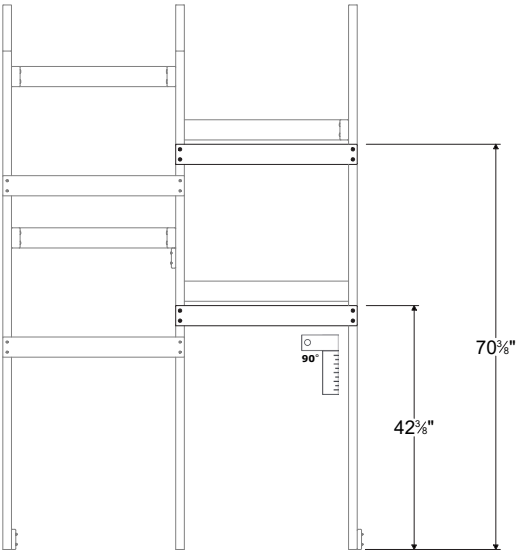

O29A	#8x2”
0.75 x 3.5 x 28.5”	T20
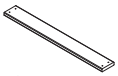	
8x	32x

13

180º

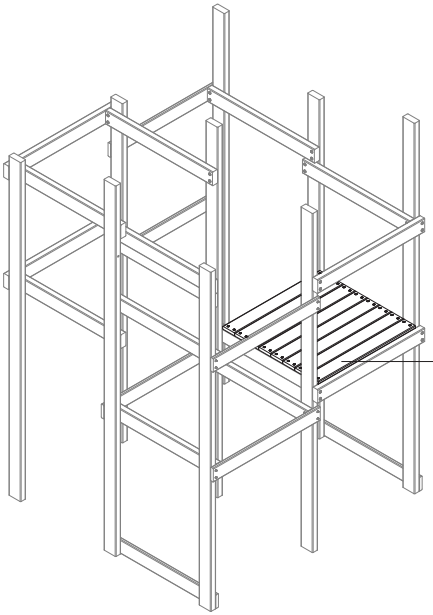

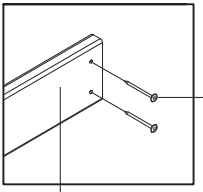

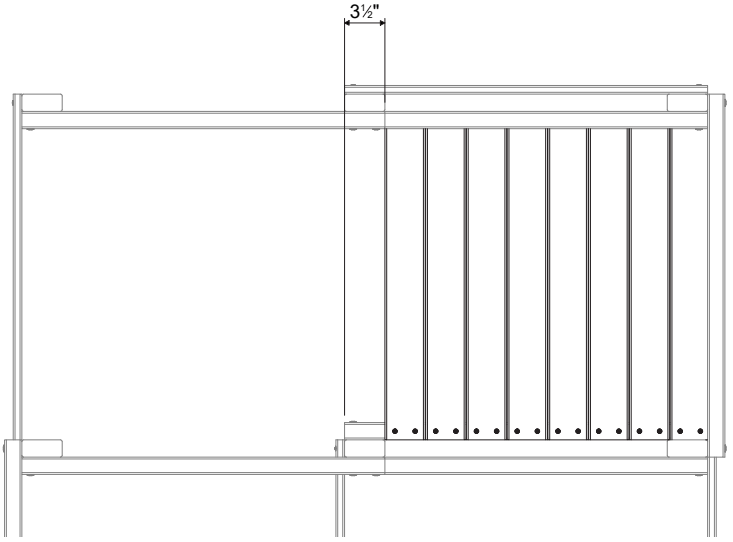

O32A	#8x2”
0.75 x 3.5 x 31.5”	T20
1x	4x

14

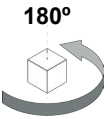

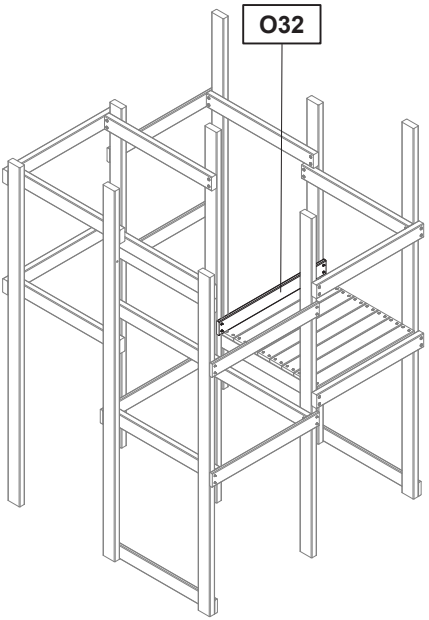

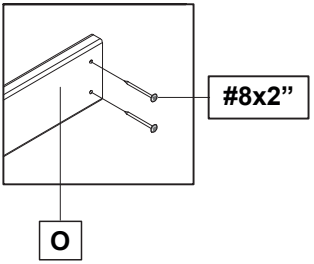

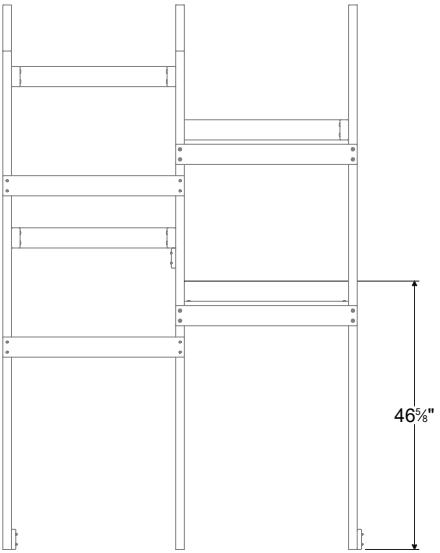

© Wickey Corporation | T21 | Version 100

T32A	6x70
1.5 x 3.5 x 31.5"	T30
2x	8x

15

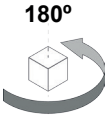

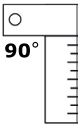

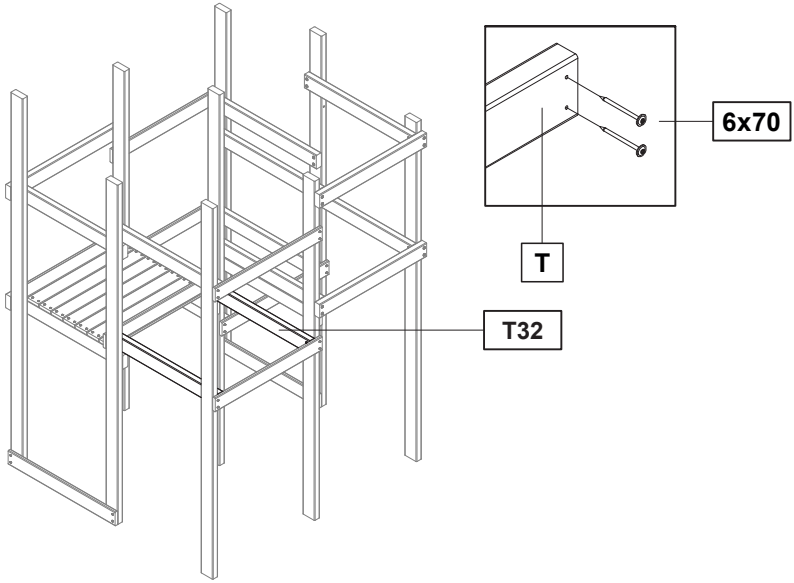

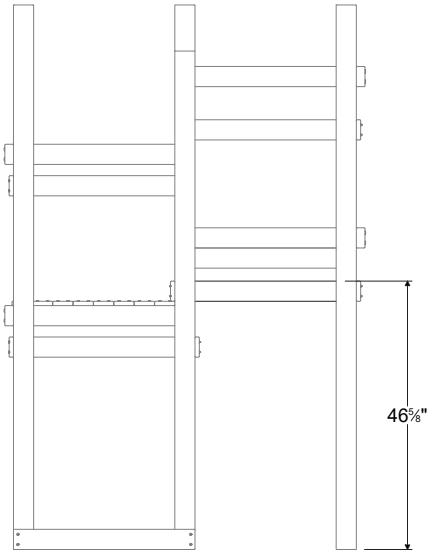

O29A	#8x2”
0.75 x 3.5 x 28.5”	T20
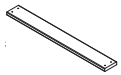	
9x	36x

16

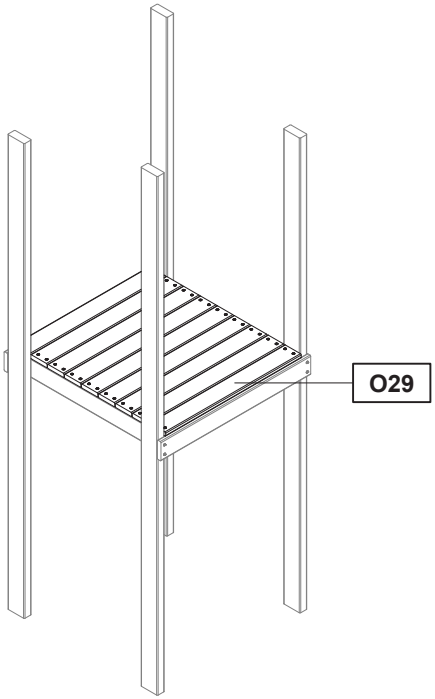

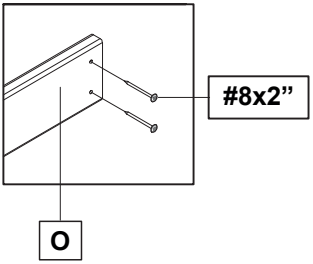

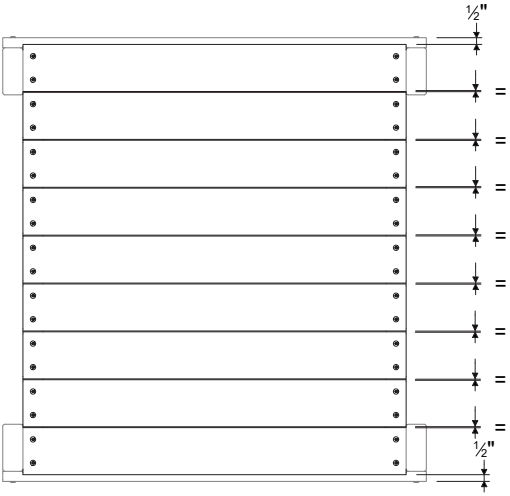

17

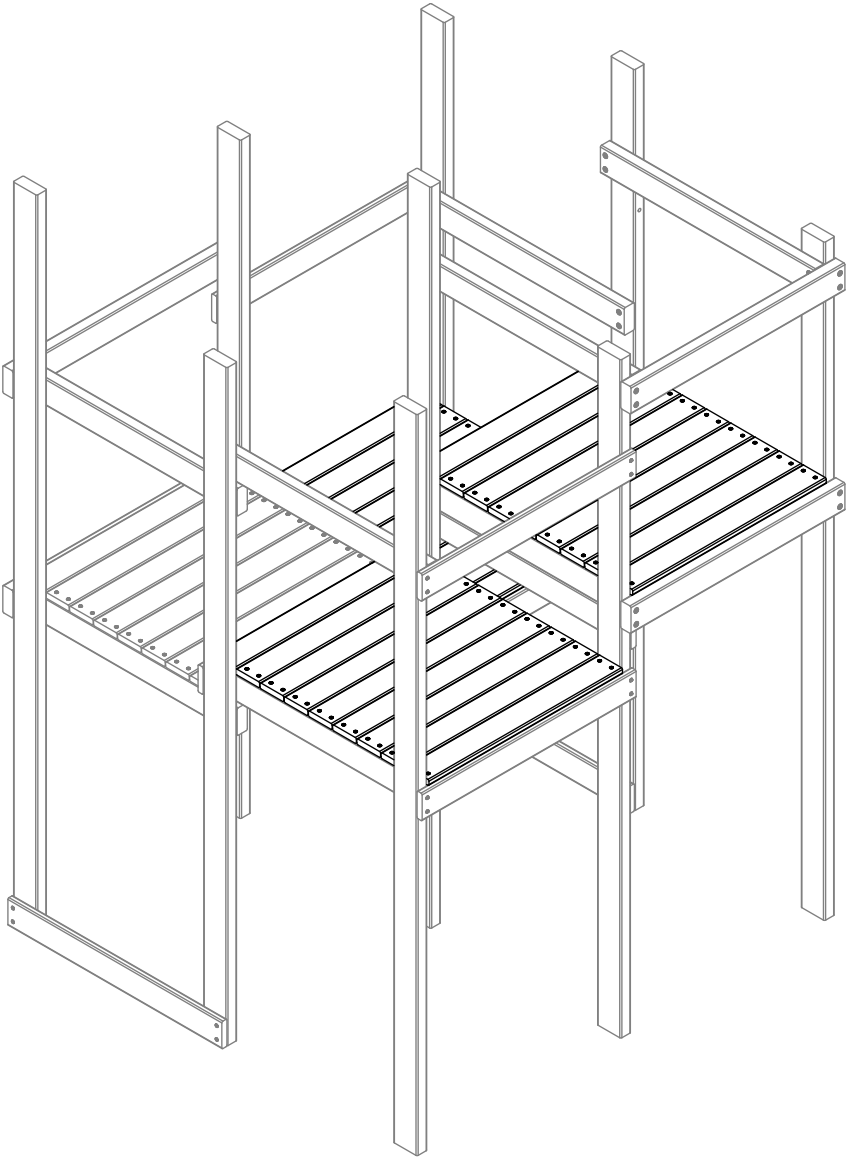

O32A	#8x2”
0.75 x 3.5 x 31.5”	T20
4x	16x

18

180º

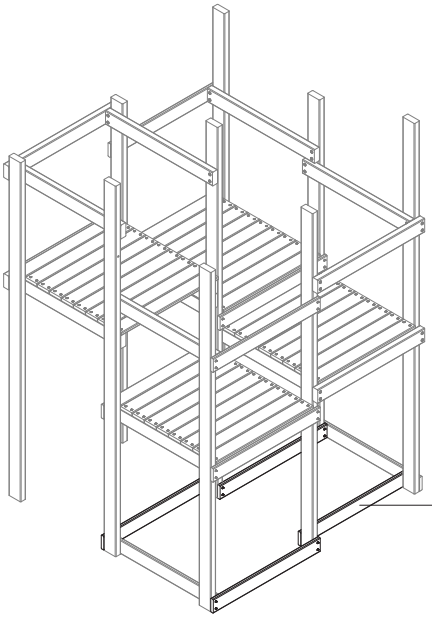

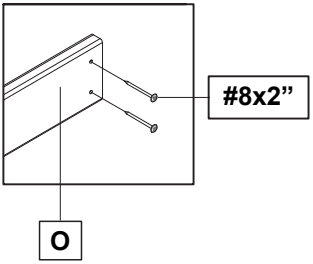

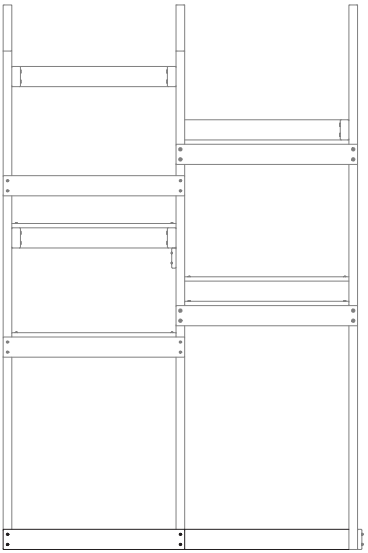

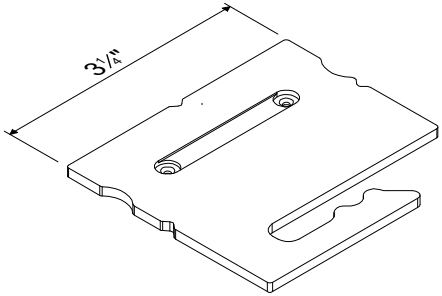
3 1/4"

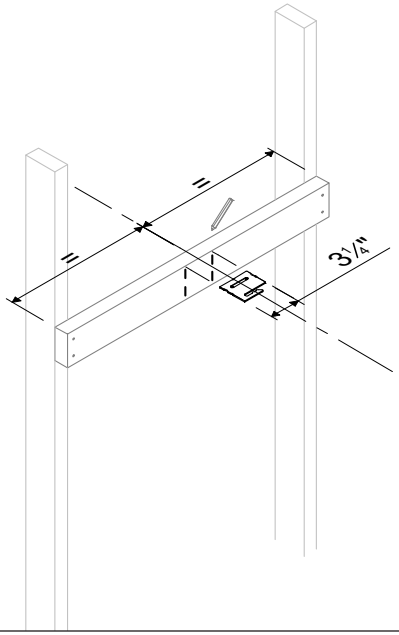
=
=
3 1/4"

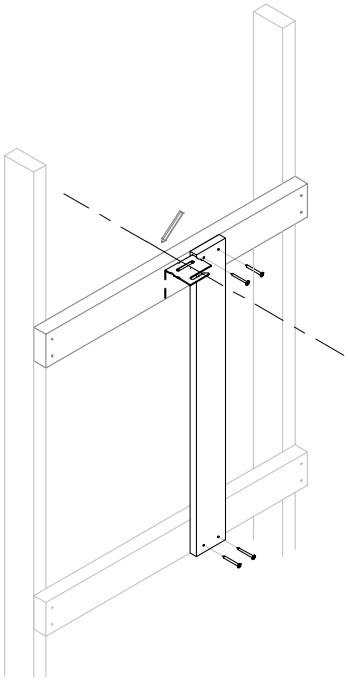

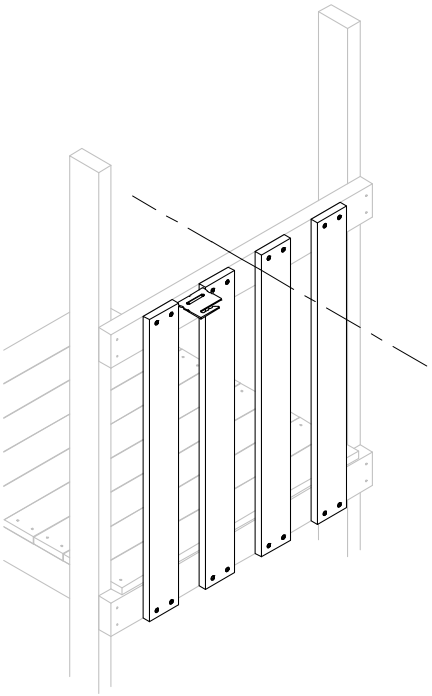

O32A	#8x2”
0.75 x 3.5 x 31.5”	T20
8x	32x

1 Wall outside

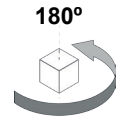

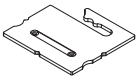

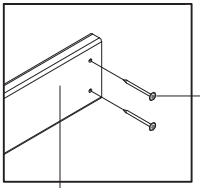

#8x2”

O

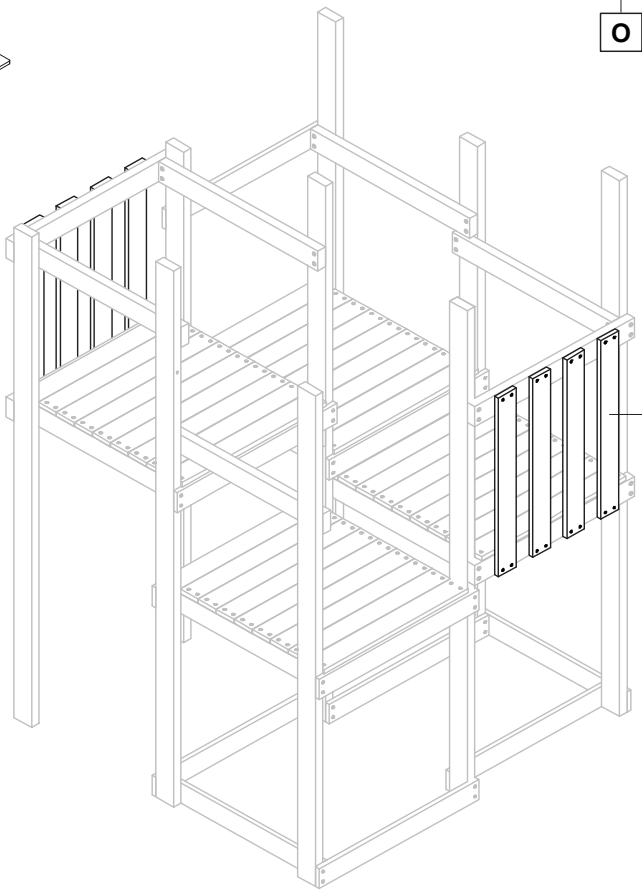

O32

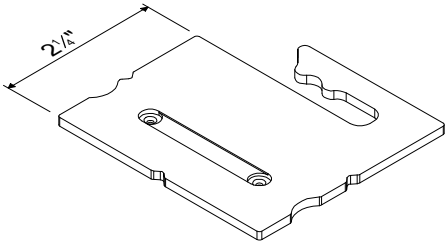
2 1/4"

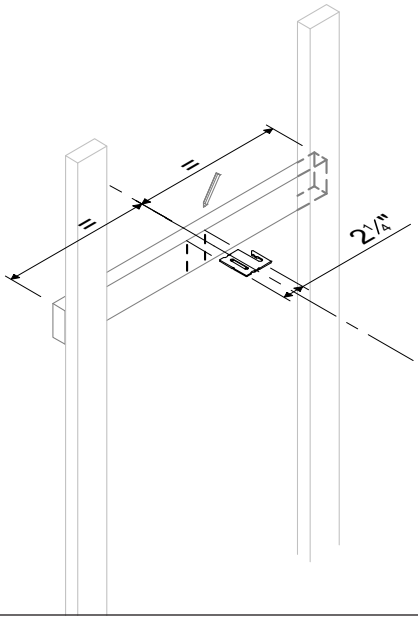
=
=
2 1/4"

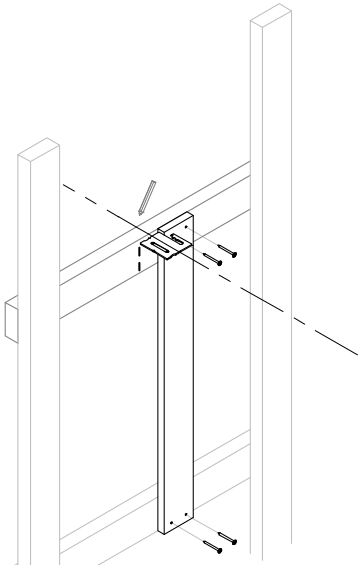

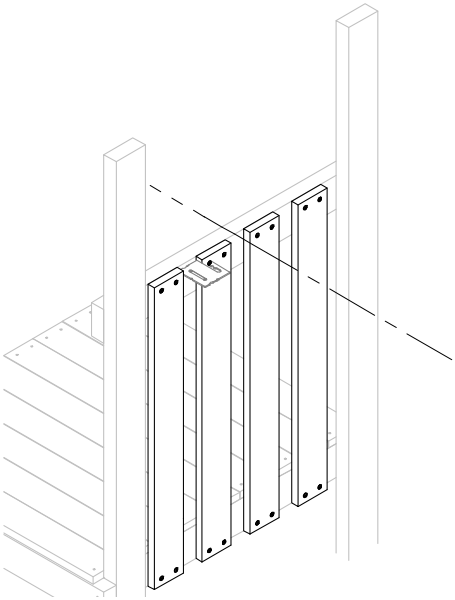

O32A	4,5x50
0.75 x 3.5 x 31.5”	T20
16x	**64x**

1 Wall inside

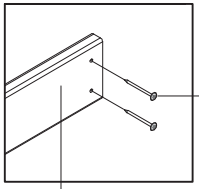

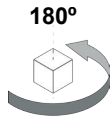

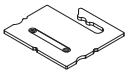

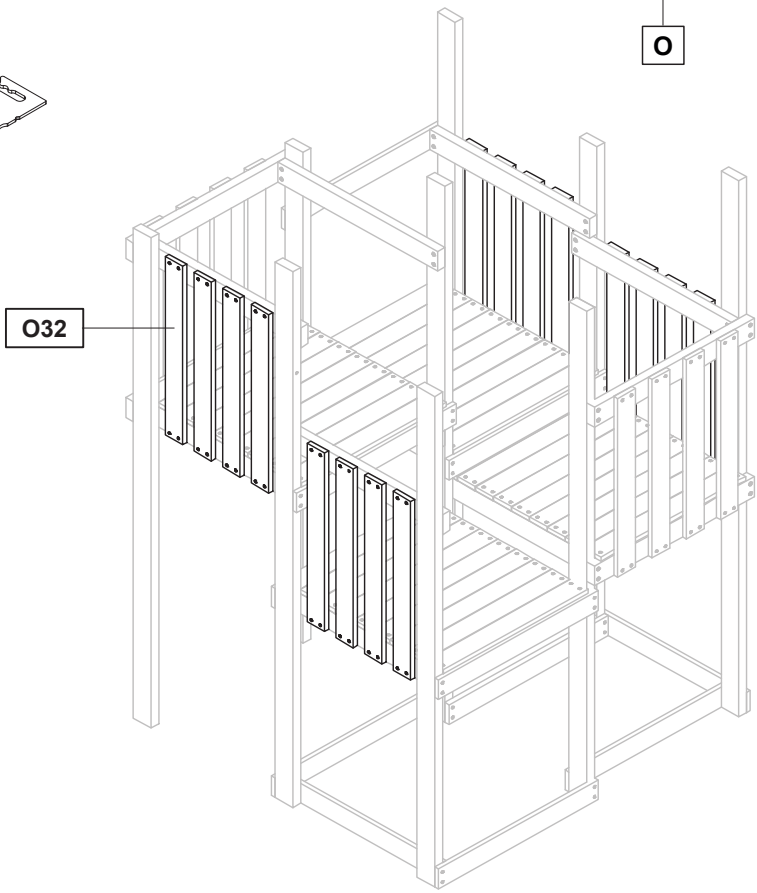

O32A 0.75 x 3.5 x 31.5”	Tarp Wall	5x20 PZ 2	Washer
	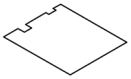		
1x	**1x**	**5x**	**5x**

1 Wall tarp

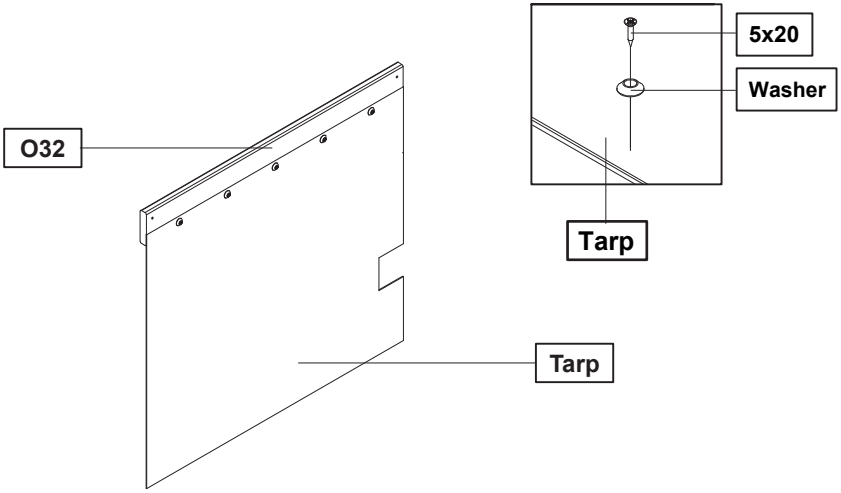

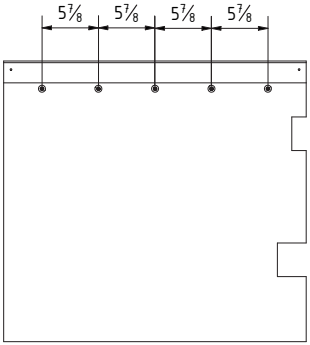

#8x2”	5x20	Washer
T20	PZ 2	
4x	**10x**	**10x**

2 Wall tarp

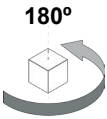

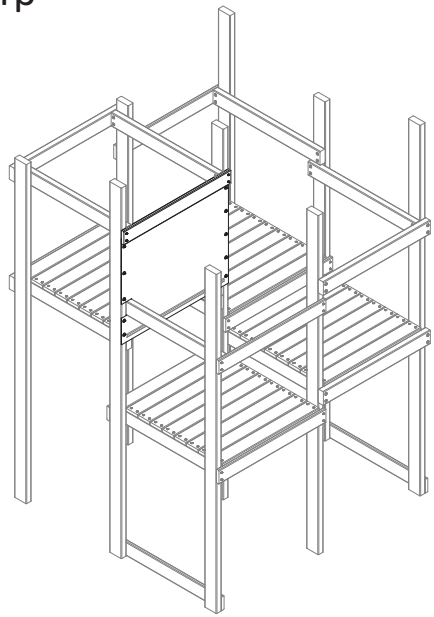

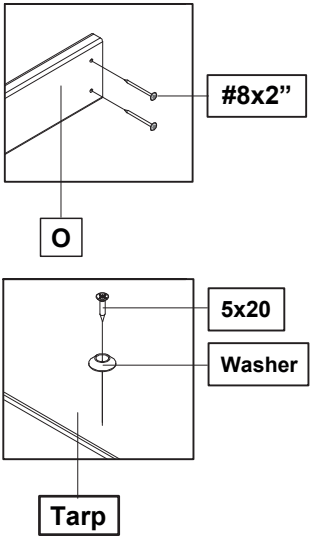

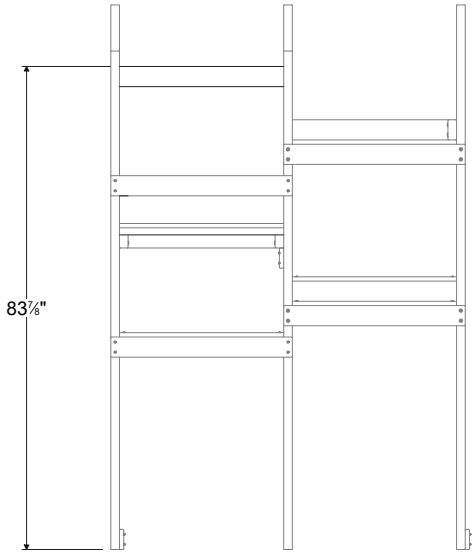

O32A	#8x2”
0.75 x 3.5 x 31.5”	T20
1x	4x

3 Wall tarp

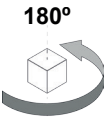

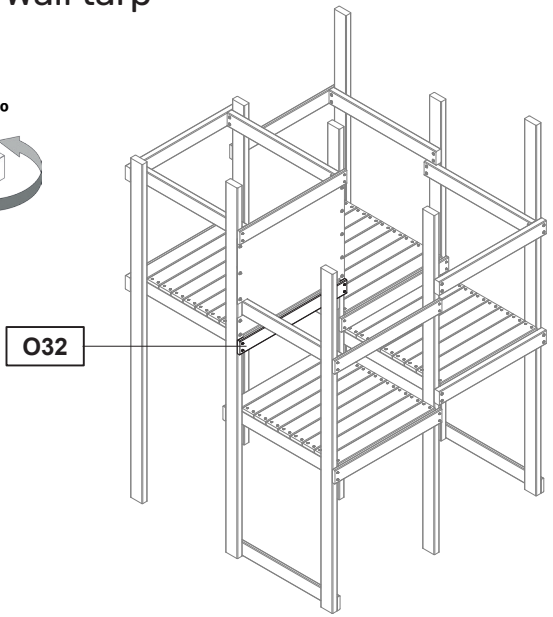

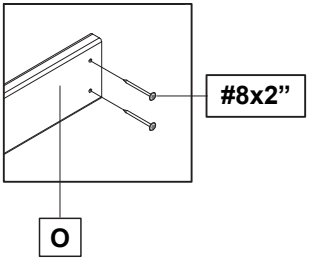

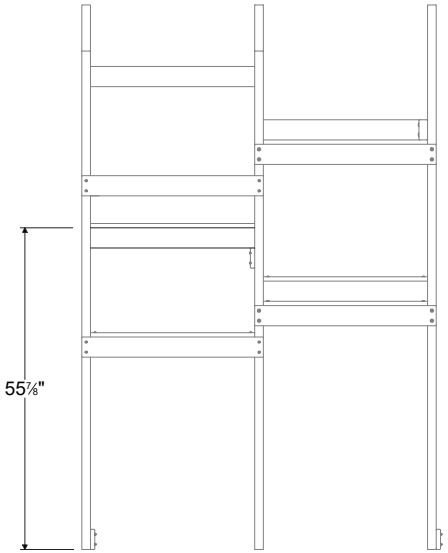

O32A	#8x2”
0.75 x 3.5 x 31.5”	T20
2x	**8x**

1 Roof tarp

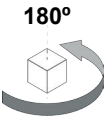

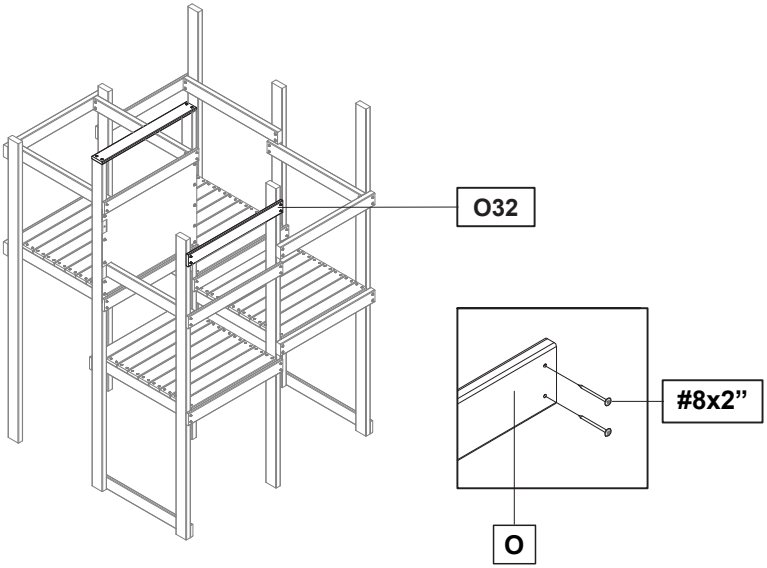

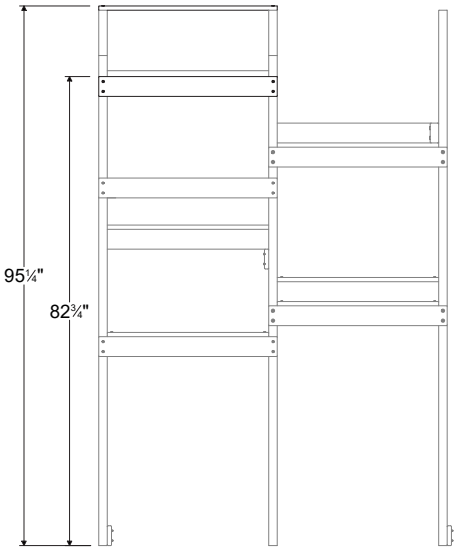

Tarp Roof	5x20 PZ 2	Washer
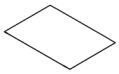		
1x	**10x**	**10x**

2 Roof Tarp

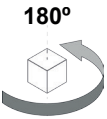

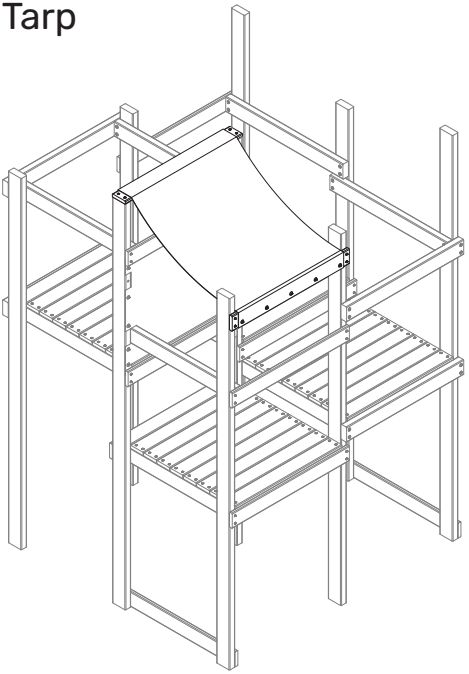

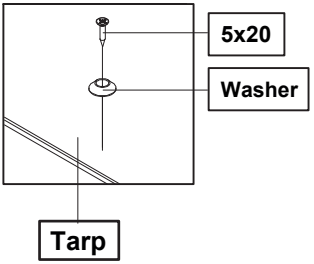

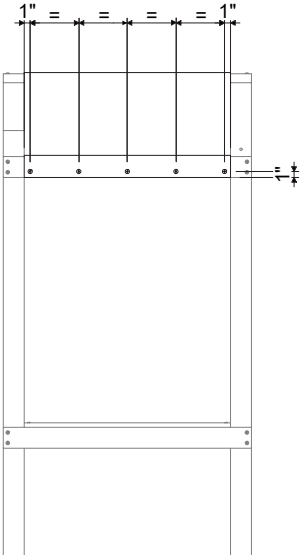

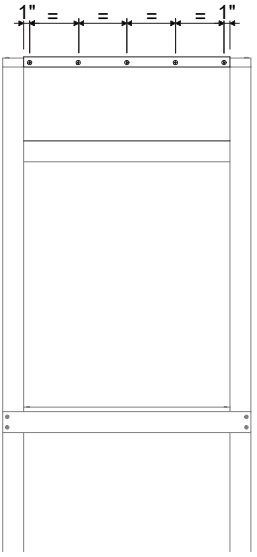

O32A	#8x2”
0.75 x 3.5 x 31.5”	T20
4x	**16x**

1 Climbing 90

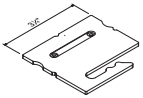

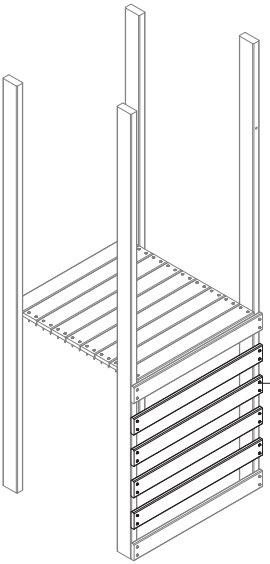

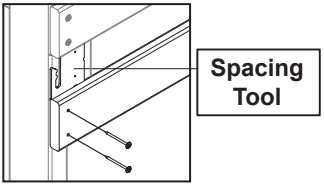

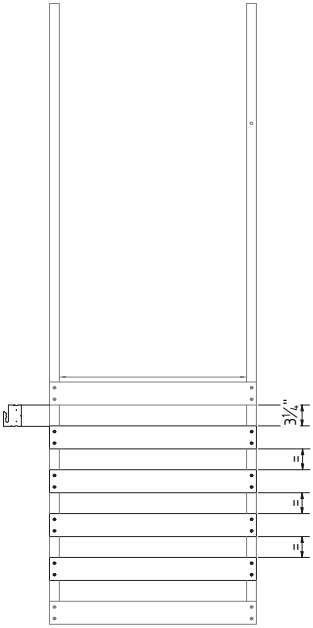

2 Climbing 90

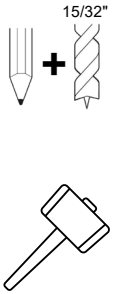

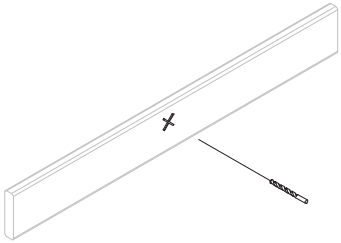

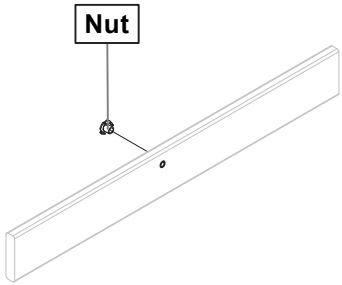

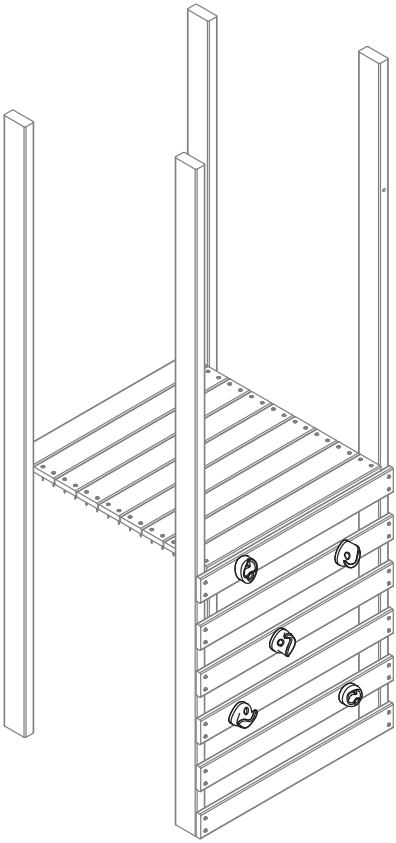

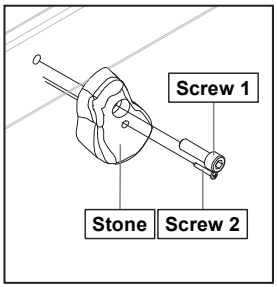

T32	6x70
1.5 x 3.5 x 31.5”	T30
1x	2x

1 Palm

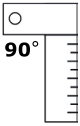

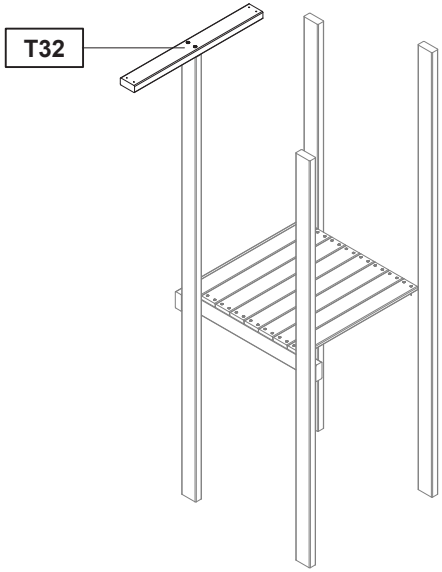

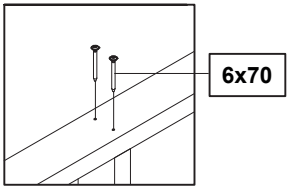

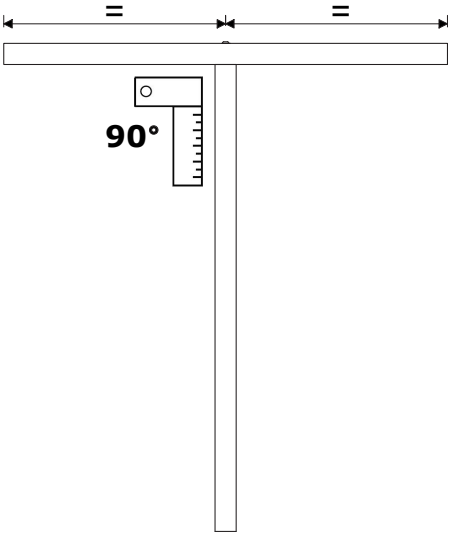

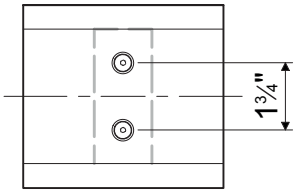

O32A
0.75 x 3.5 x 31.5"

2x

2 Palm

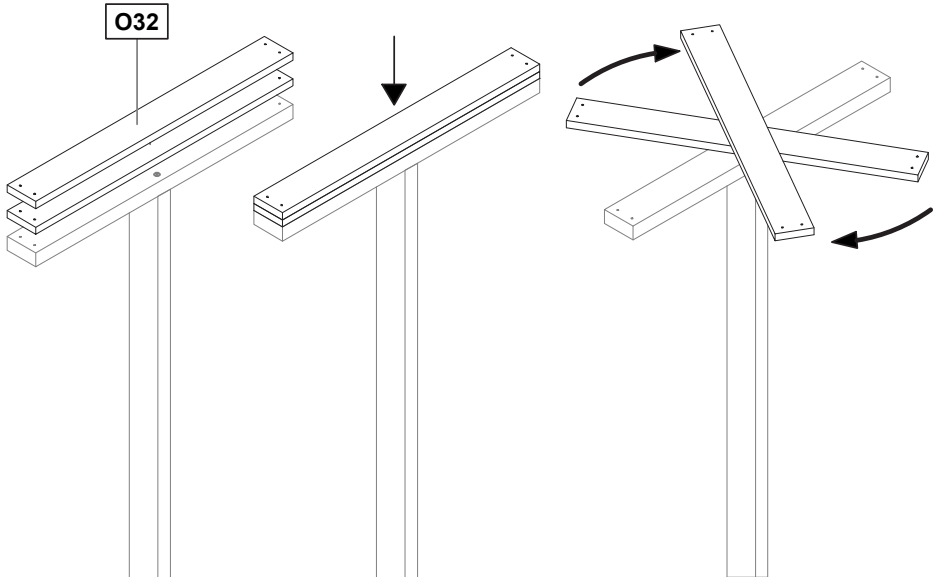

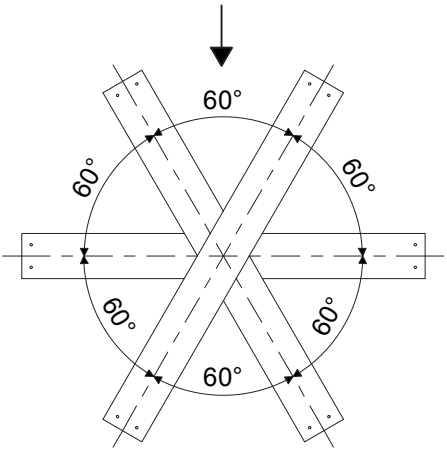

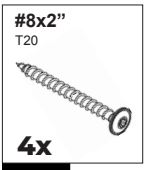

3 Palm

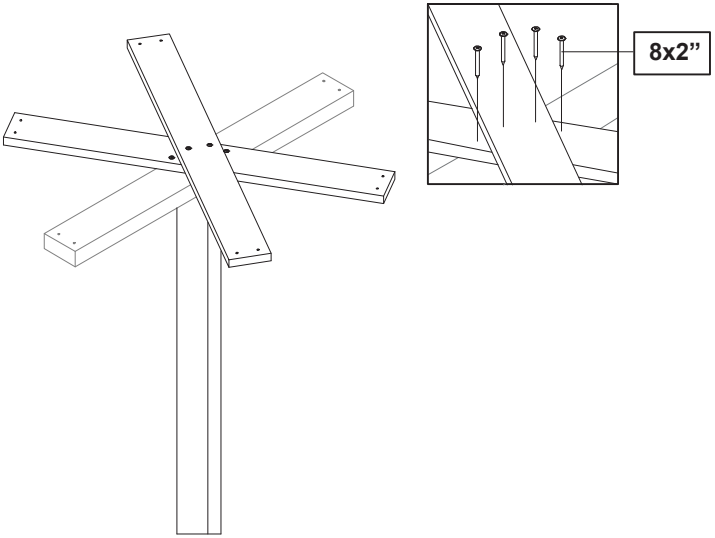

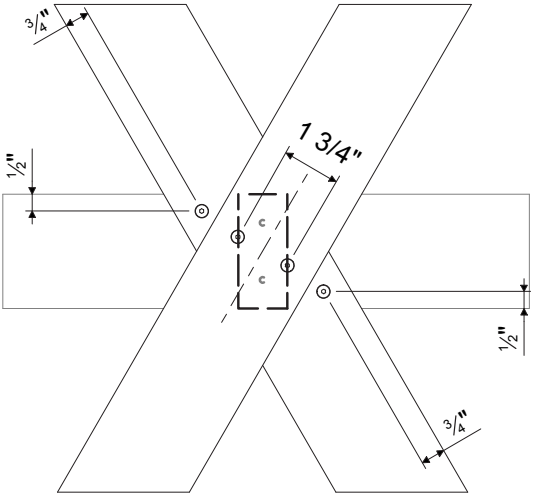

Tarp Palm	5x20 PZ 2	Washer
6x	**24x**	**24x**

4 Palm

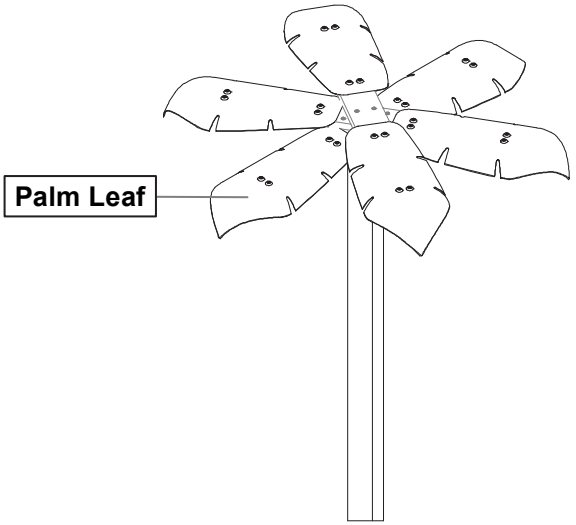

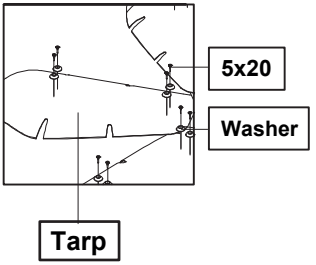

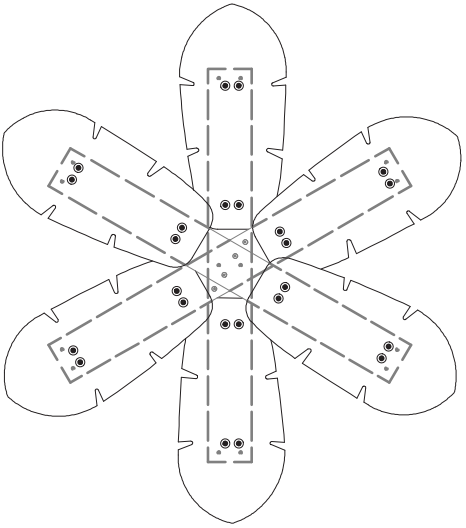

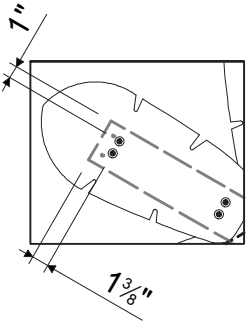

T42A	O29A	#8x2”
1.5 x 3.5 x 41.5”	0.75 x 3.5 x 28.5”	T20
	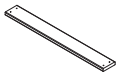	
2x	**7x**	**28x**

1 Ladder 90

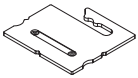

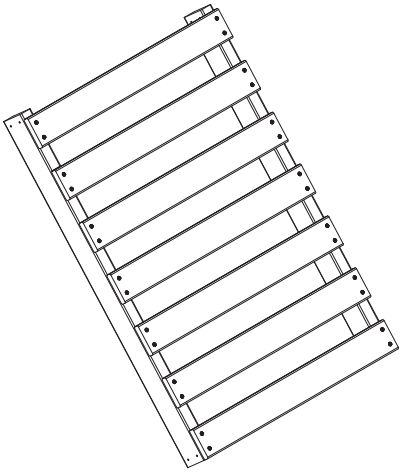

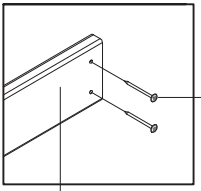

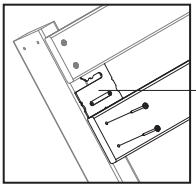

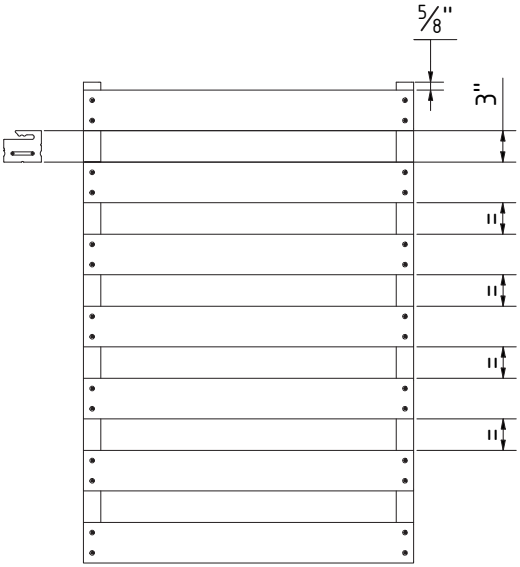

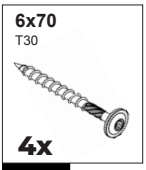

2 Ladder 90

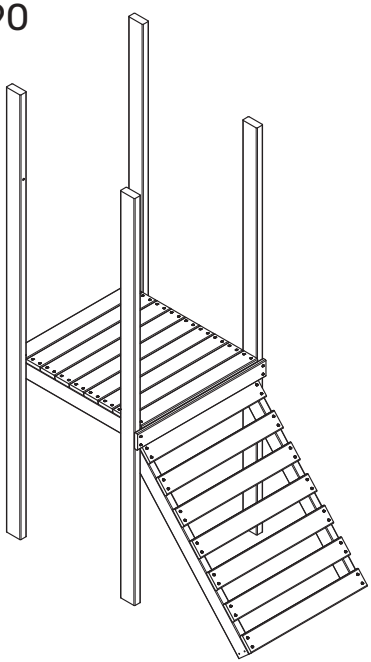

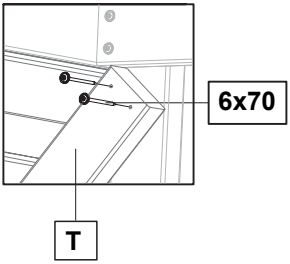

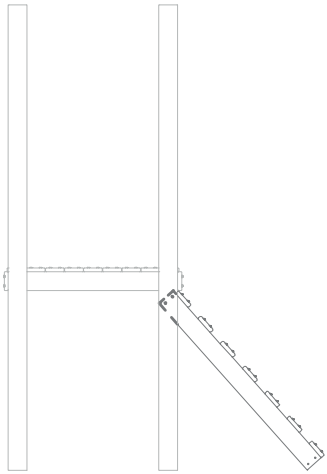

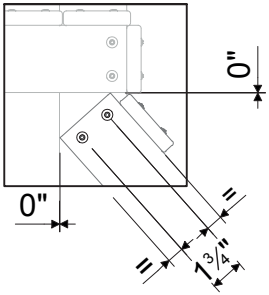

Rope	#8x2” T20	Special Cap
1x	2x	2x

3 Ladder 90

5x

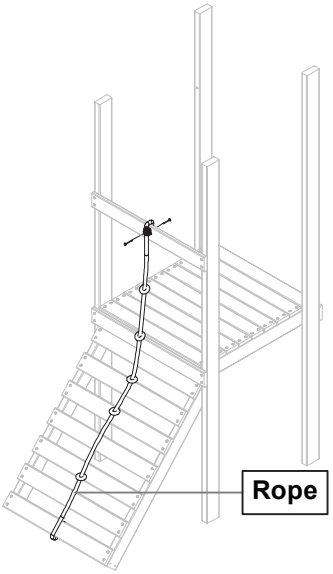

Special Cap

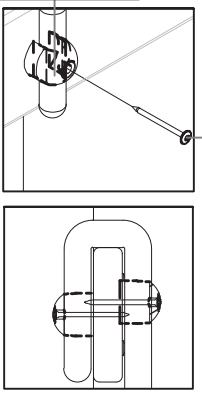

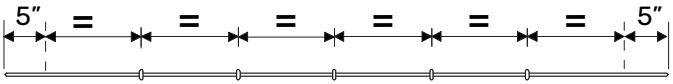

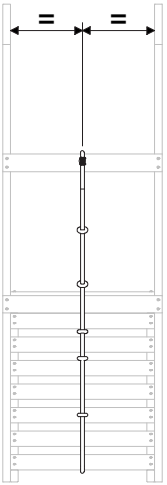

#8x2” T20	Special Cap
2x	2x

2 Ladder 90

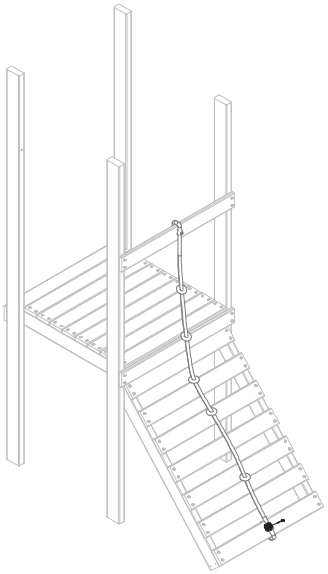

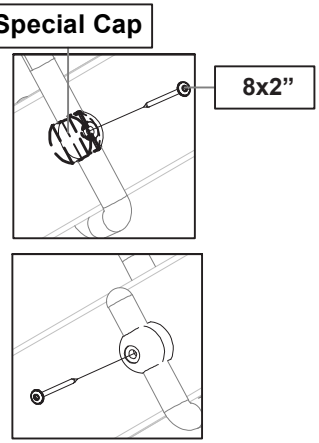

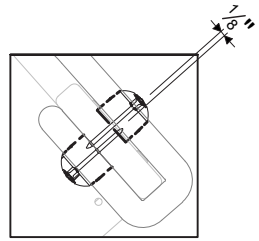

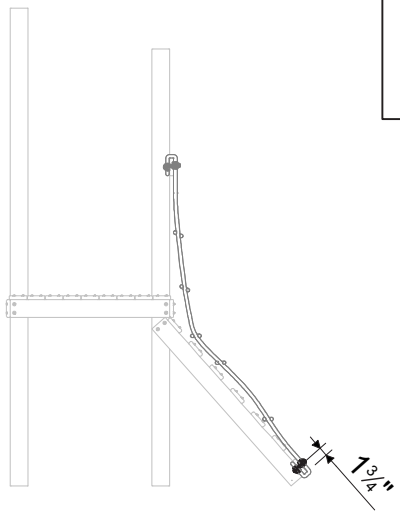

T10	6x70
1.5 x 3.5 x 9.5”	T30
2x	4x

1 Shop

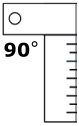

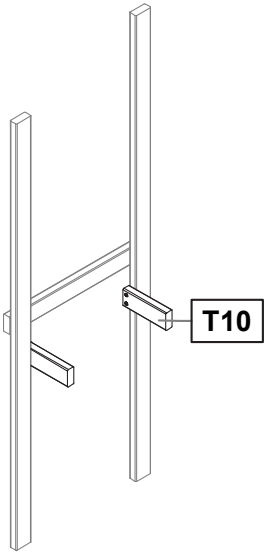

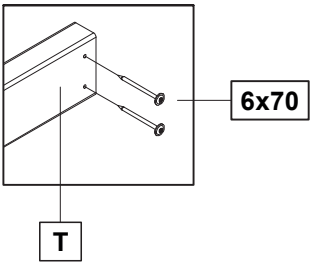

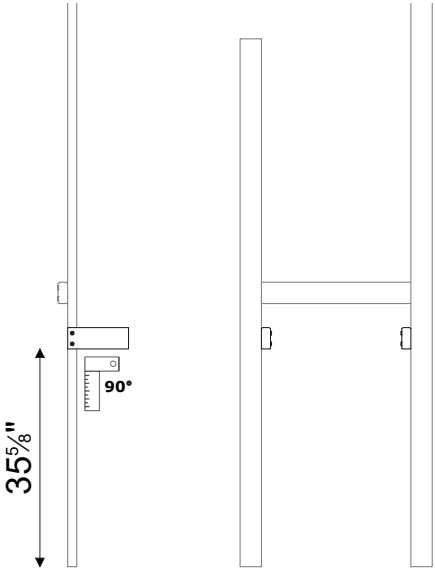

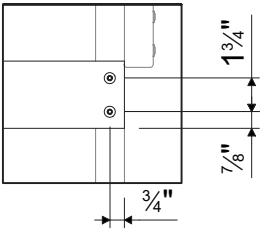

Tarp Shop	5x20	Washer
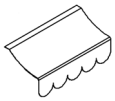	PZ 2	
1x	4x	4x

2 Shop

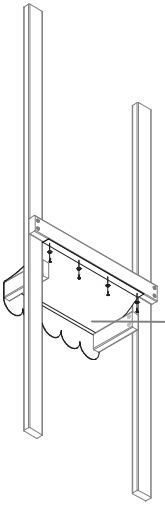

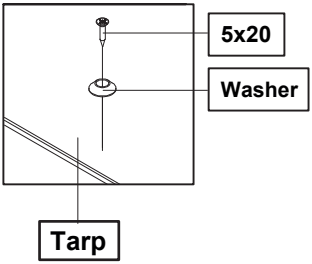

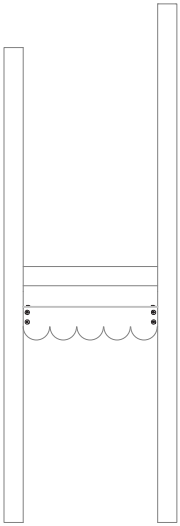

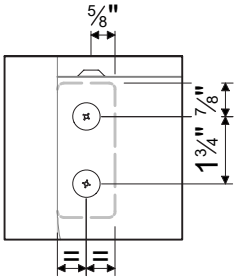

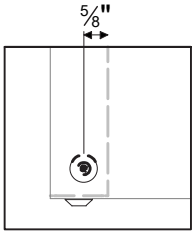

5x20 PZ 2	Washer
 6x	 **6x**

3 Shop

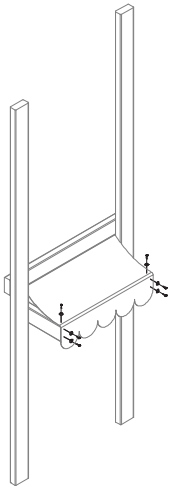

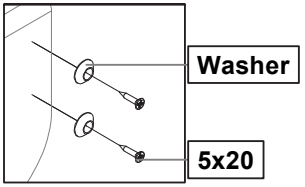

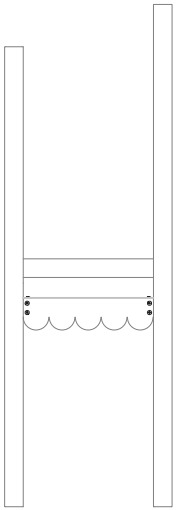

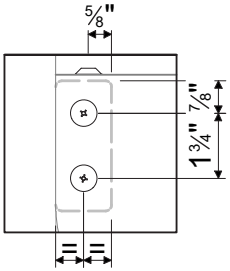

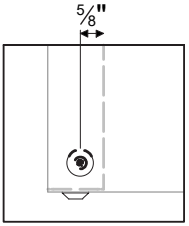

O32A 0.75 x 3.5 x 31.5”	Tarp Wall	5x20 PZ 2	Washer
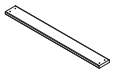	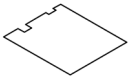		
1x		3x	3x

1 Shop

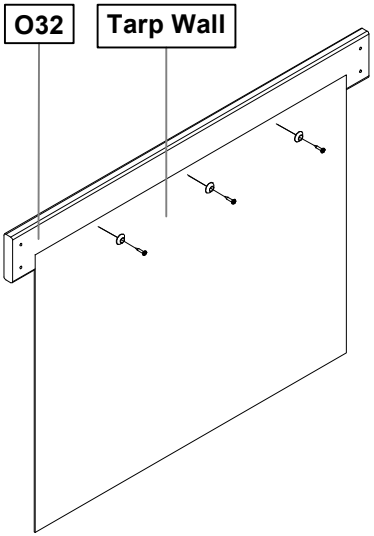

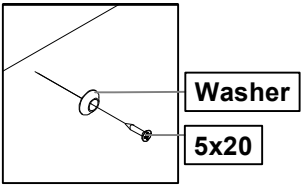

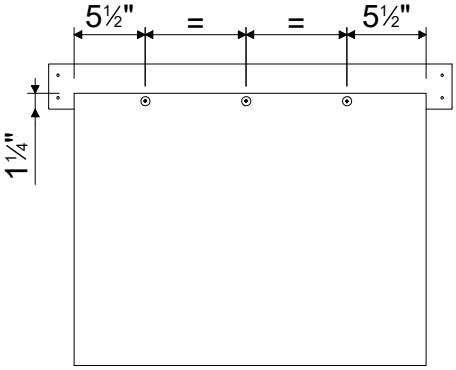

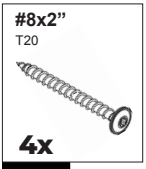

2 Shop

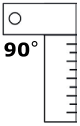

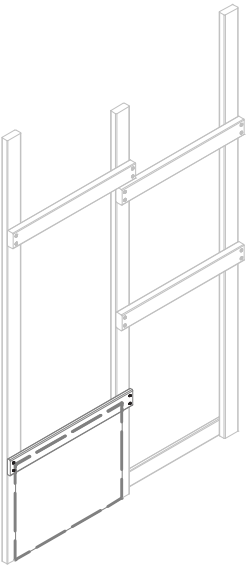

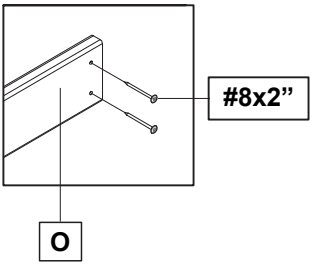

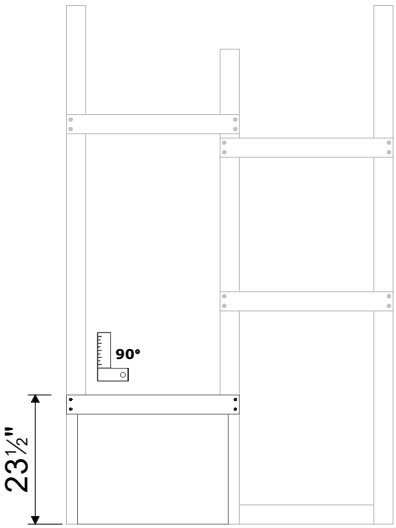

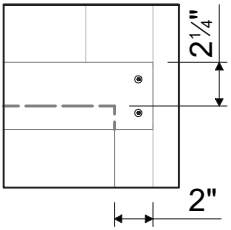

5x20 PZ 2	Washer
6x	**6x**

3 Shop

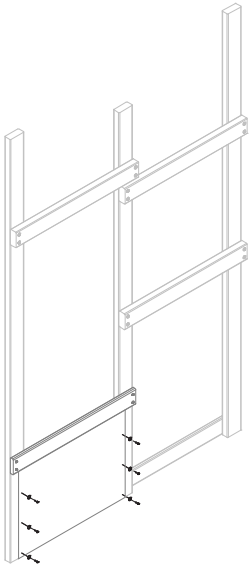

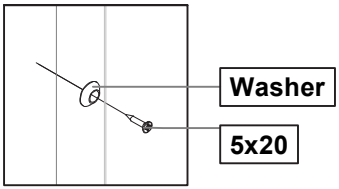

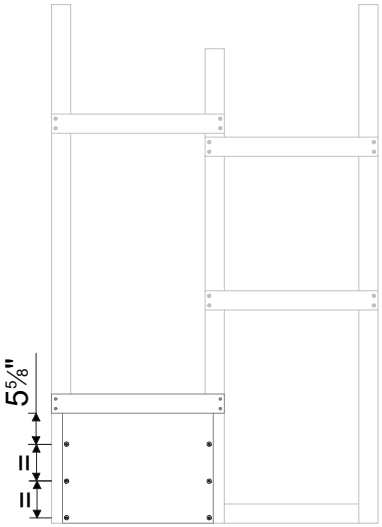

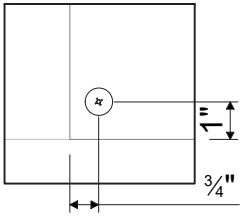

T32A	6x70
1.5 x 3.5 x 31.5”	T30
2x	8x

1 Hammock

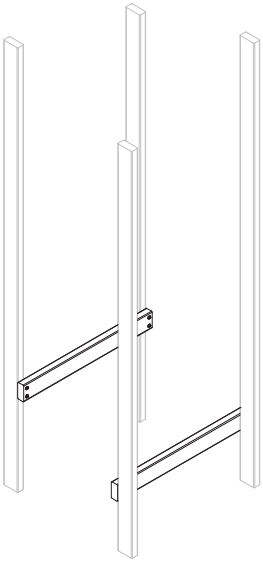

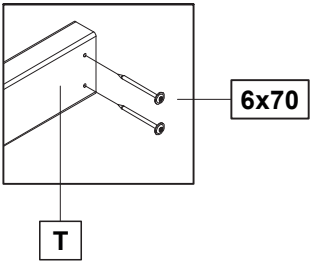

Tarp Hammock	5x20 PZ 2	Washer
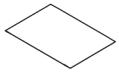		
1x	**10x**	**10x**

2 Hammock

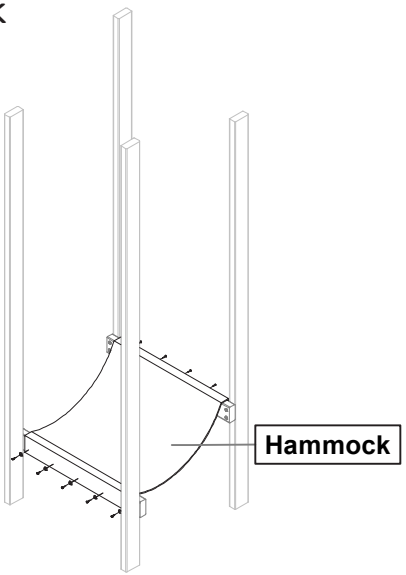

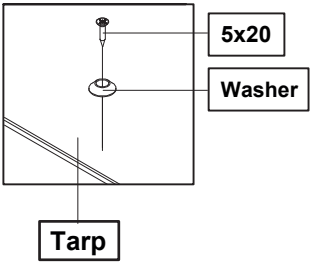

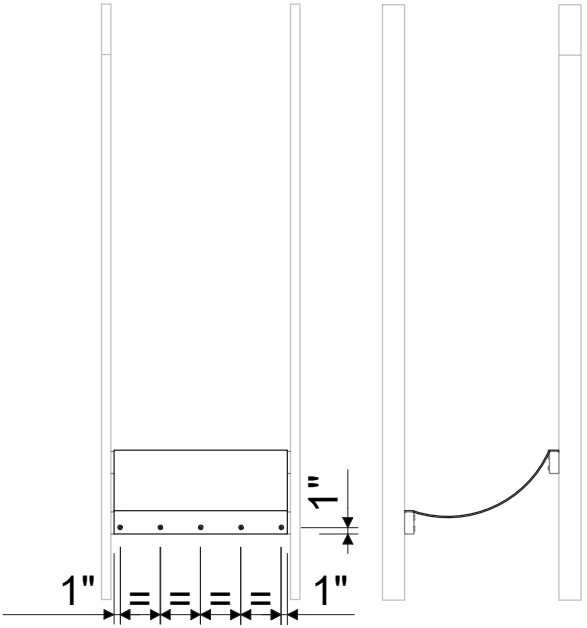

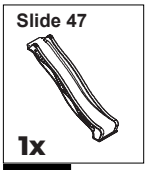

1 Slide

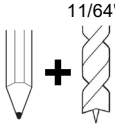

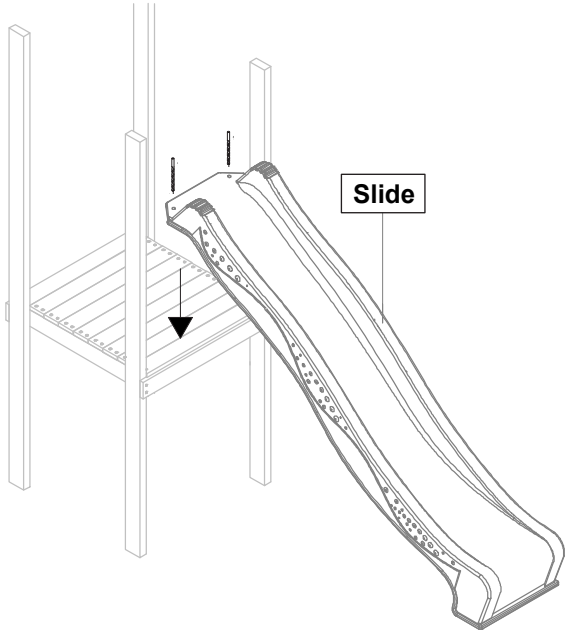

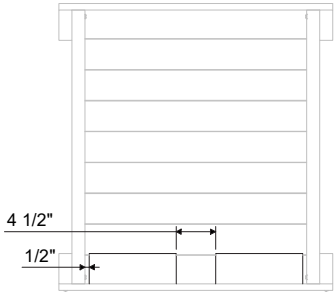

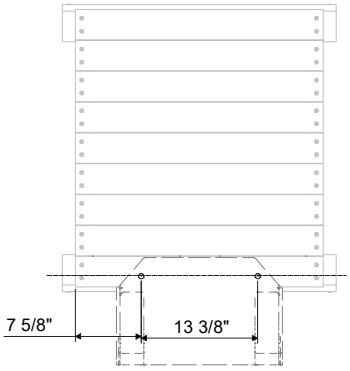

T10	6x70
1.5 x 3.5 x 9.5"	T30
2x	2x

2 Slide

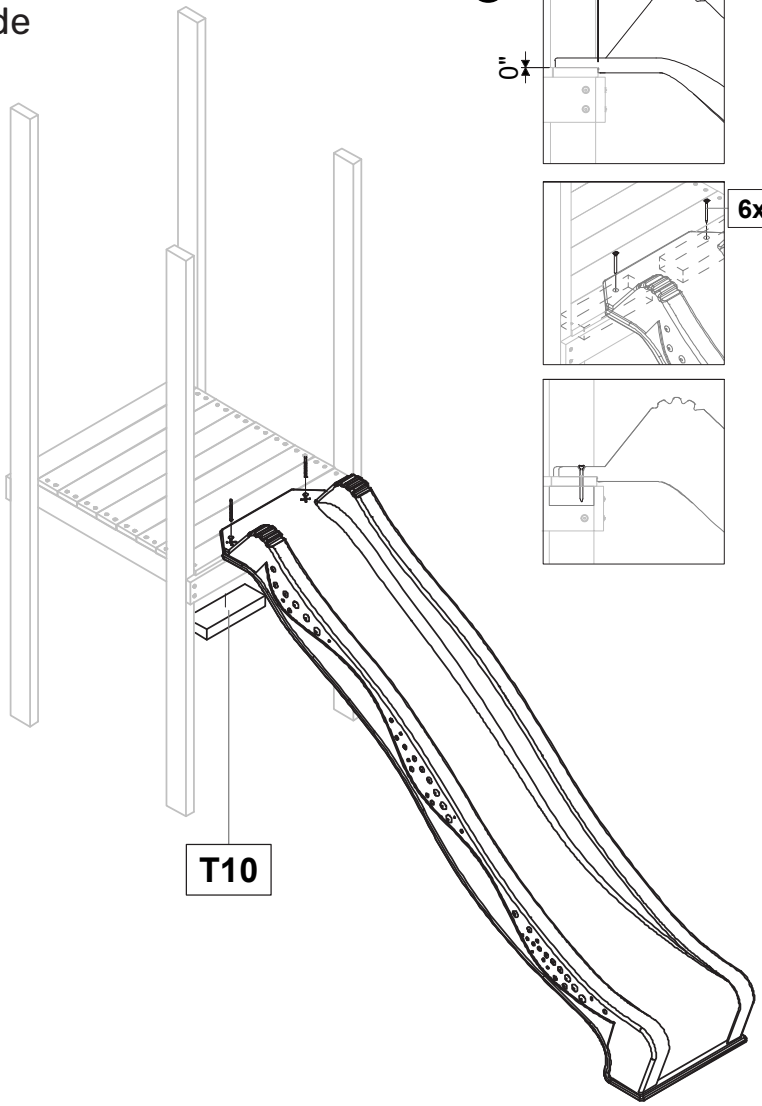

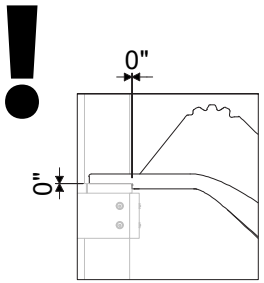

Tarp Flag	5x20 PZ 2	Washer
1x	3x	3x
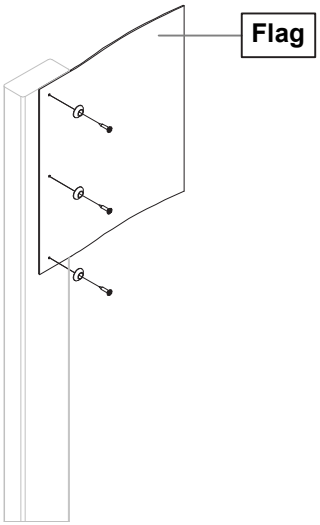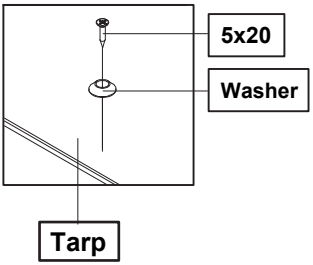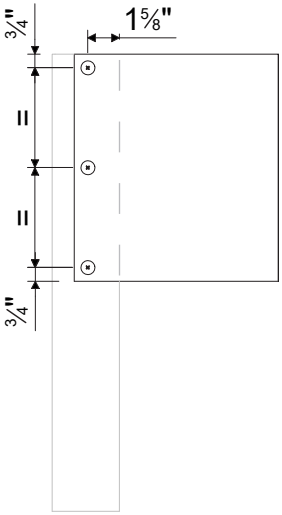
1 Flag