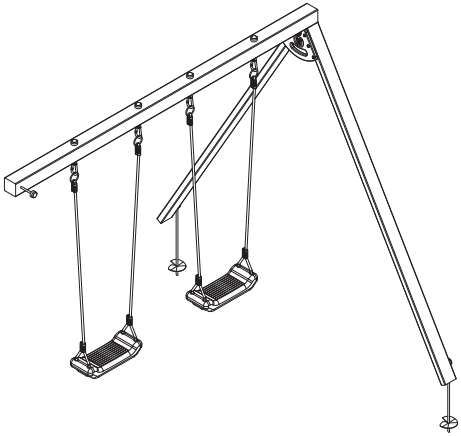

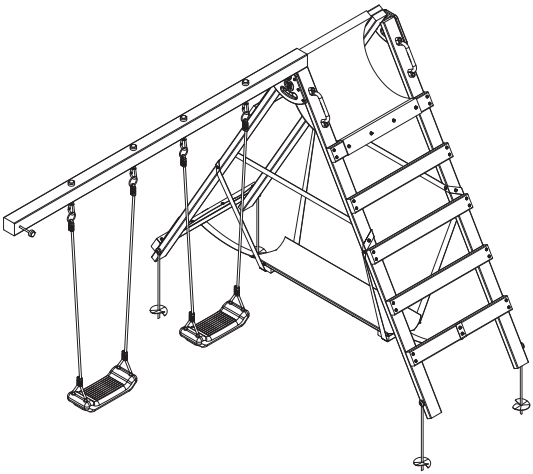

Warning! Choking Hazard - Small parts! Only for domestic use. For outdoor use only.
Product must be assembled by an adult. Customer must keep this information

0-3 **Ages 3-14**

max. **100 kg**

© Wickey Corporation . Copyrighted material. Do not reproduce under penalty of law.

202501 V100

Ground Anchor	Washer incl. with anchor	Screw incl. with anchor
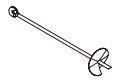		
2x	**2x**	**2x**

Anchoring

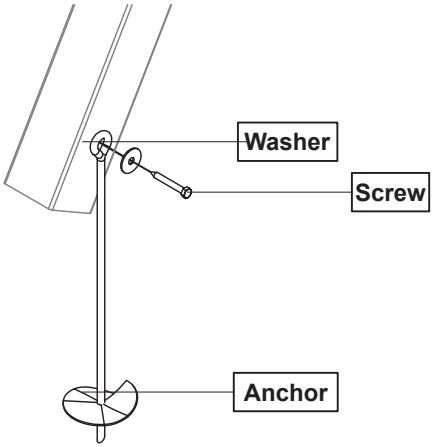

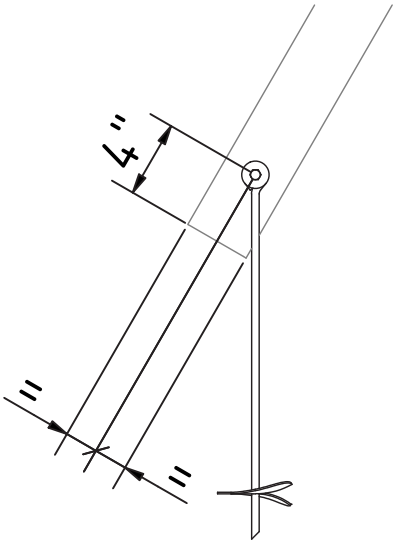

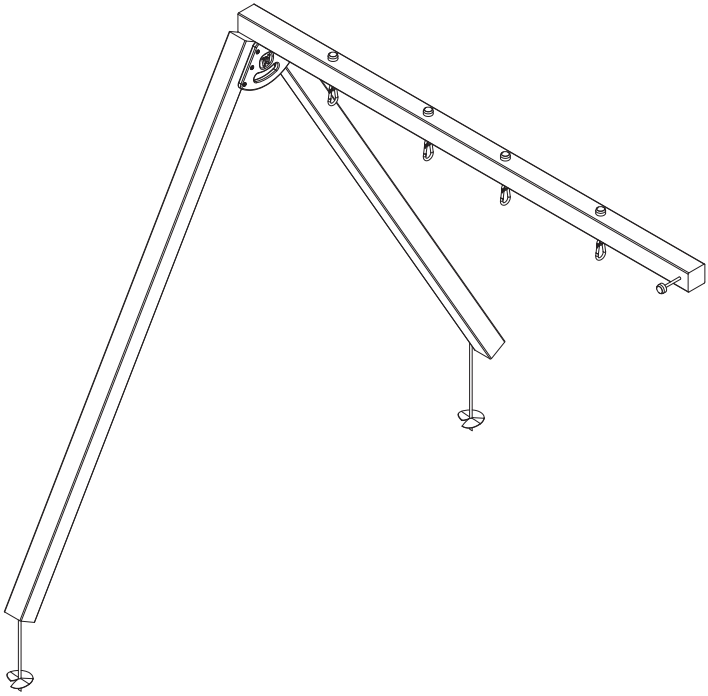

P Partlist

F95B 3.5 x 3.5 x 94.5” **1x**	**T87** 1.5 x 3.5 x 86.5” **2x**	**Swing frame connector** **1x**	**6x70** T30 **6x**	**M10X40** Carriage Bolt **1x**	**Nut M10** **6x**	**Washer M10** **6x**
M10X190 Carriage Bolt 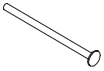 **1x**	**Cap** **6x**	**55x45** Mounting Bracket 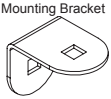 **1x**	**Swing Hook** **4x**	**Ground Anchor** 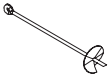 **2x**	**Washer** incl. with anchor **2x**	**Screw** incl. with anchor **2x**

Swing frame connector	M10X40 Carriage Bolt	Nut M10	Washer M10	Cap	55x45 Mounting Bracket
					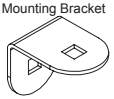
1x	1x	1x	1x	1x	1x

1 Swing Connector

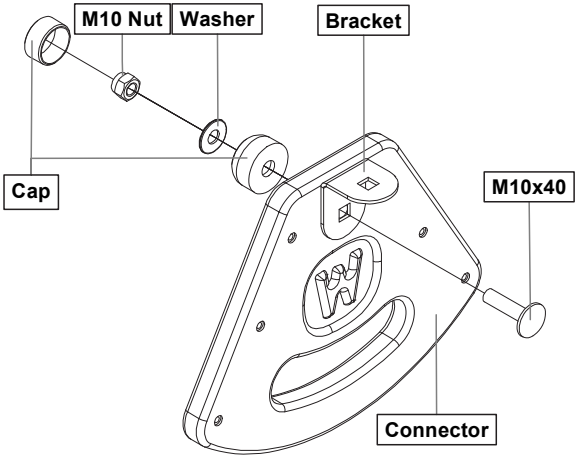

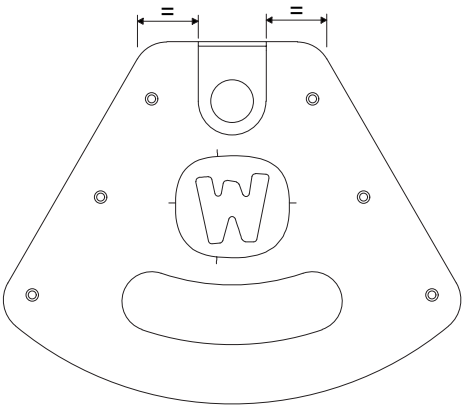

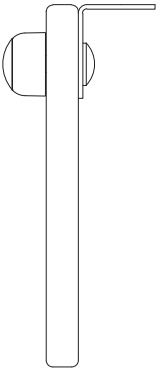

F95
3.5 x 3.5 x 94.5"

2x

2 Swing Connector

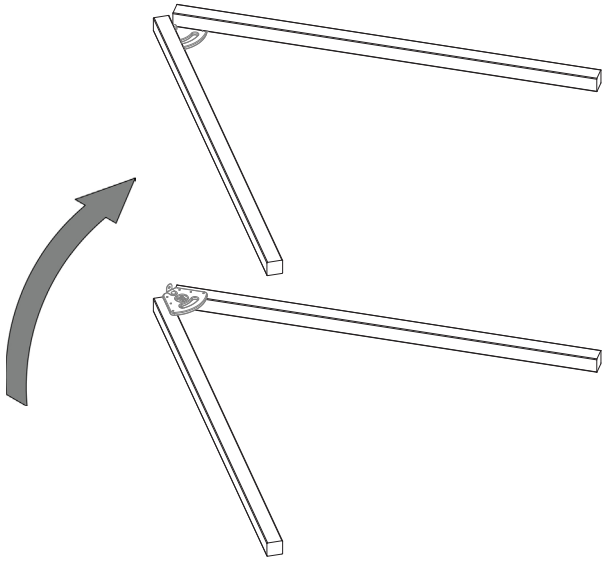

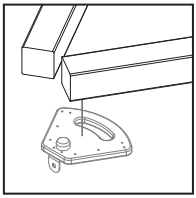

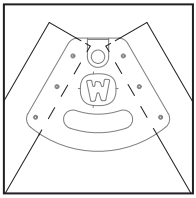

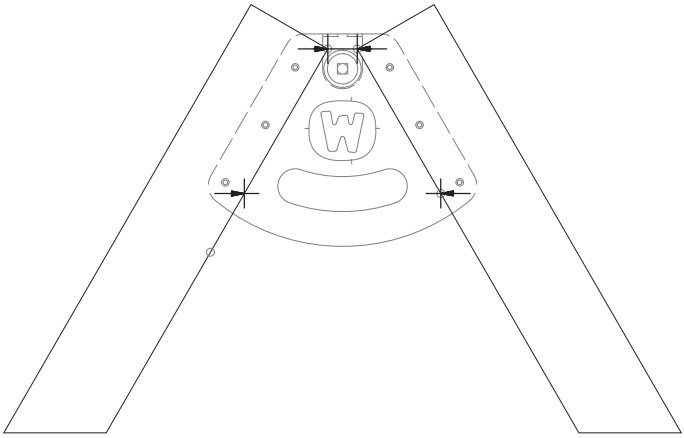

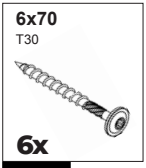

3 Swing Connector

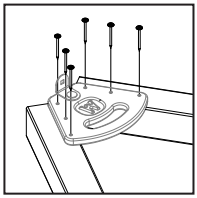

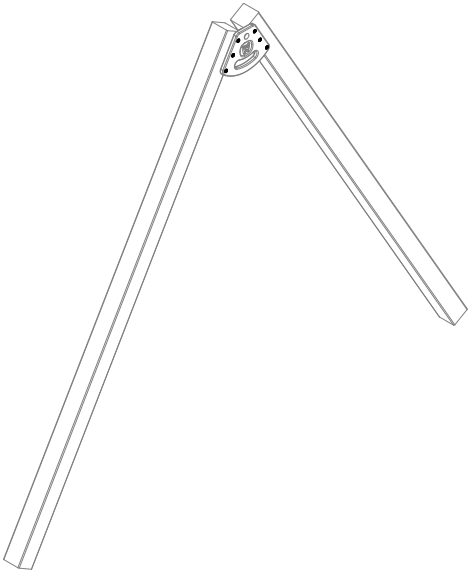

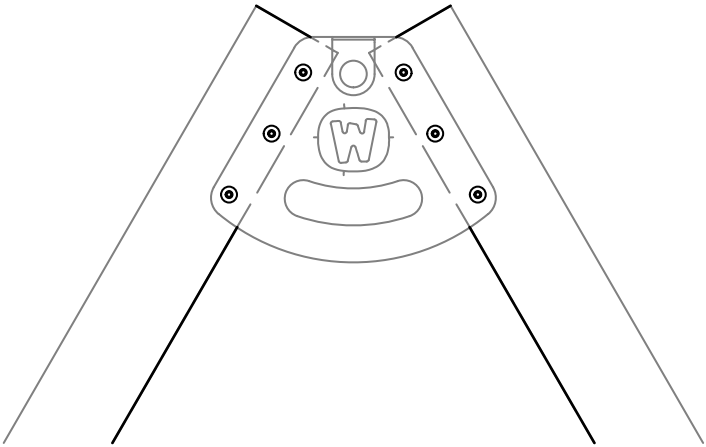

F95B
3.5 x 3.5 x 94.5”

1x

1 Swingbeam

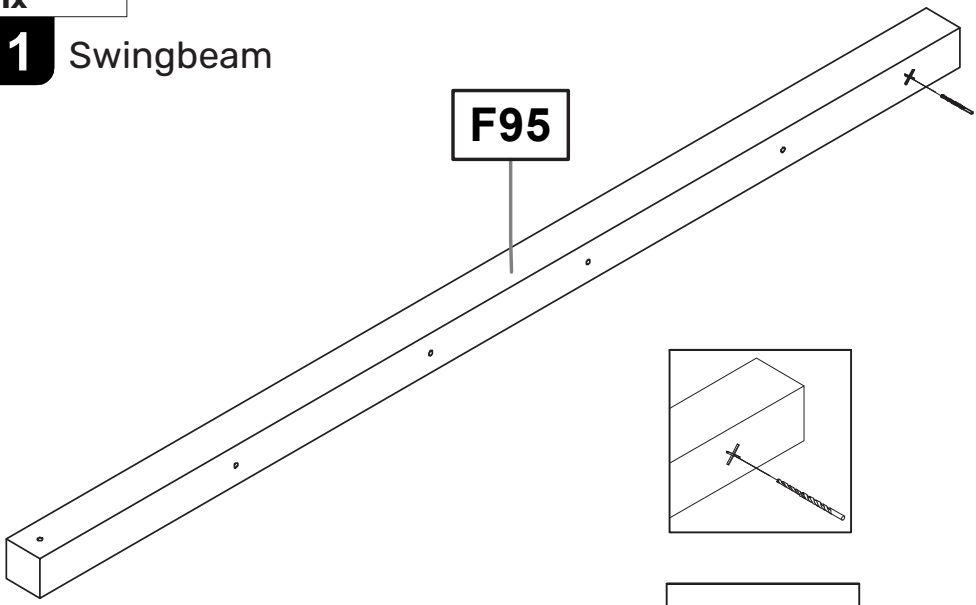

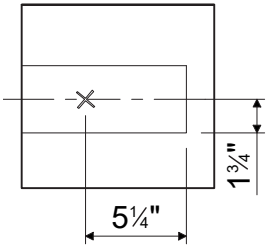

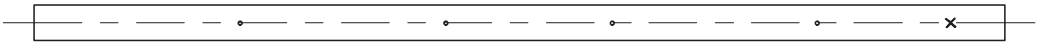

Swing Hook	Nut M10	Washer M10	Cap
4x	4x	4x	4x

2 Swingbeam

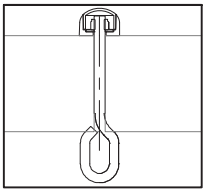

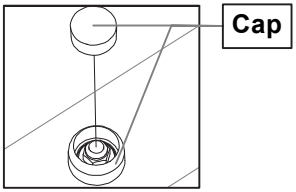

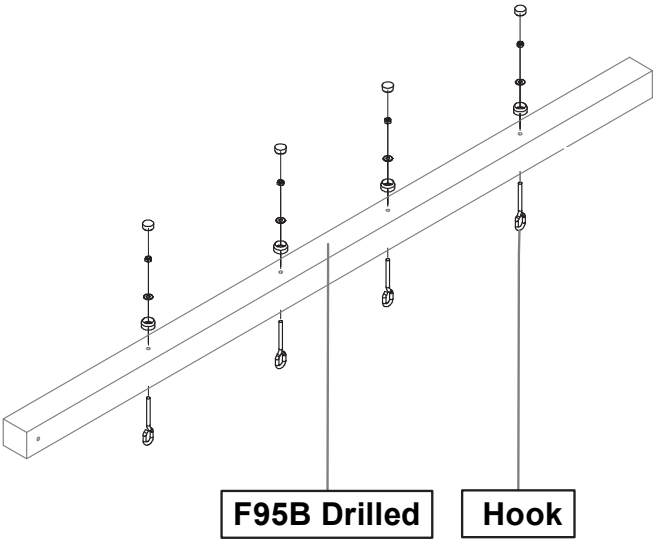

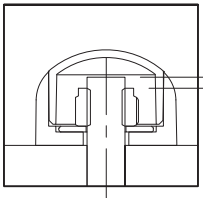

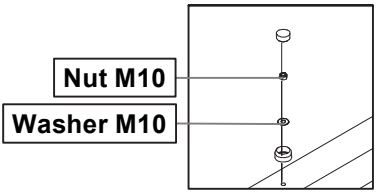

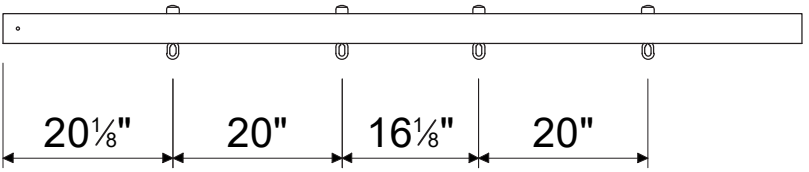

M10X190 Carriage Bolt	Nut M10	Washer M10	Cap
1x	1x	1x	1x

3 Swingbeam

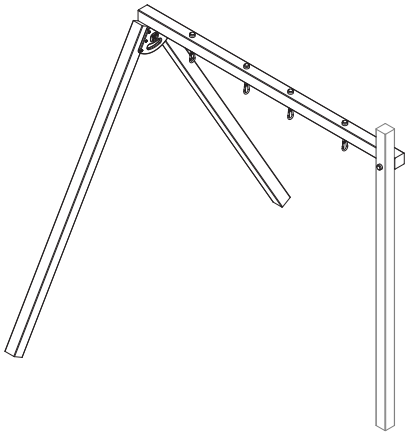

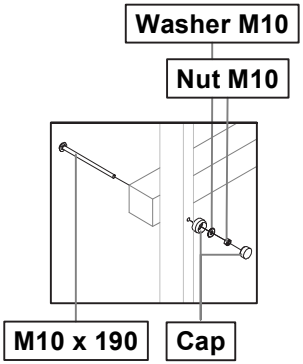

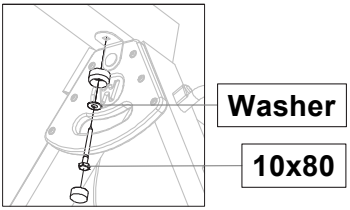

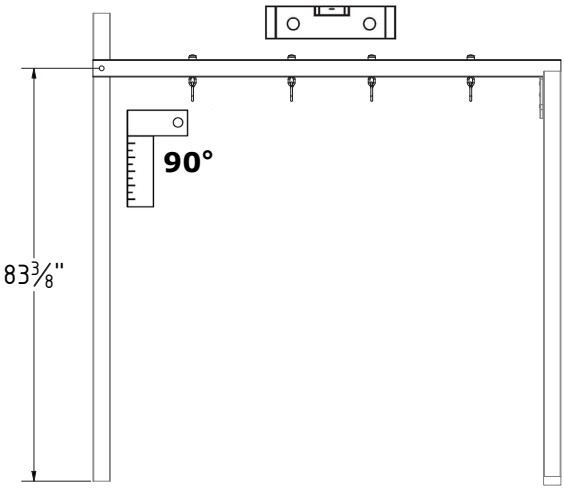

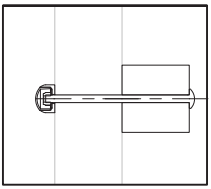

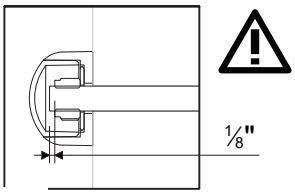

Ground Anchor	Washer incl. with anchor	Screw incl. with anchor
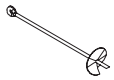		
4x	**4x**	**4x**

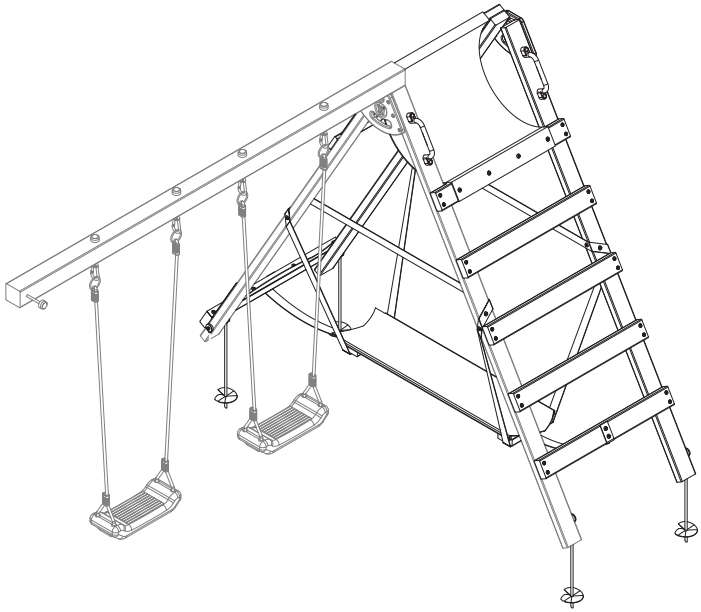

P Partlist

F95 3.5 x 3.5 x 94.5” **8x**	**F95A** 3.5 x 3.5 x 94.5” **3x**	**F95B** 3.5 x 3.5 x 94.5” **1x**	**F87** 3.5 x 3.5 x 86.5” **2x**	**T87** 1.5 x 3.5 x 86.5” **37x**	**F65A** 3.5 x 3.5 x 65” **1x**	**T42A** 1.5 x 3.5 x 41.5” **35x**
O35A 0.75 x 3.5 x 34.5” **58x**	**T32A** 1.5 x 3.5 x 31.5” **1x**	**O32A** 0.75 x 3.5 x 31.5” **29x**	**T10** 1.5 x 3.5 x 9.5” **2x**	**5x20** PZ 2 **150x**	**#8x2”** T20 **416x**	**6x70** T30 **187x**
Washer **150x**	**Washer M10** **11x**	**Cap** **11x**	**Nut M10** **10x**	**10x80** Hexagone Wood Screw **1x**	**Ground Anchor** **4x**	**Swing Hook** **5x**
M10X190 Carriage Bolt **2x**	**55x45** Mounting Bracket **1x**	**M10X40** Carriage Bolt **2x**	**Special Cap** **4x**	**Swing frame connector** **2x**	**Tarp Hammock** **1x**	**Tarp Arch** **1x**
Tarp Opening **1x**	**Tarp Surfboard** **1x**	**Belt** **2x**	**Slide Rocli** **1x**	**Rope** **1x**	**Rope Ladder** **1x**	**Swing Seat** **2x**
Grips **5x**	**Climbingstone** **2x**	**Wheel** **2x**	**Ships Wheel** **1x**	**Telescope** **2x**	**Sticker** **1x**	

Tarp cutting plan

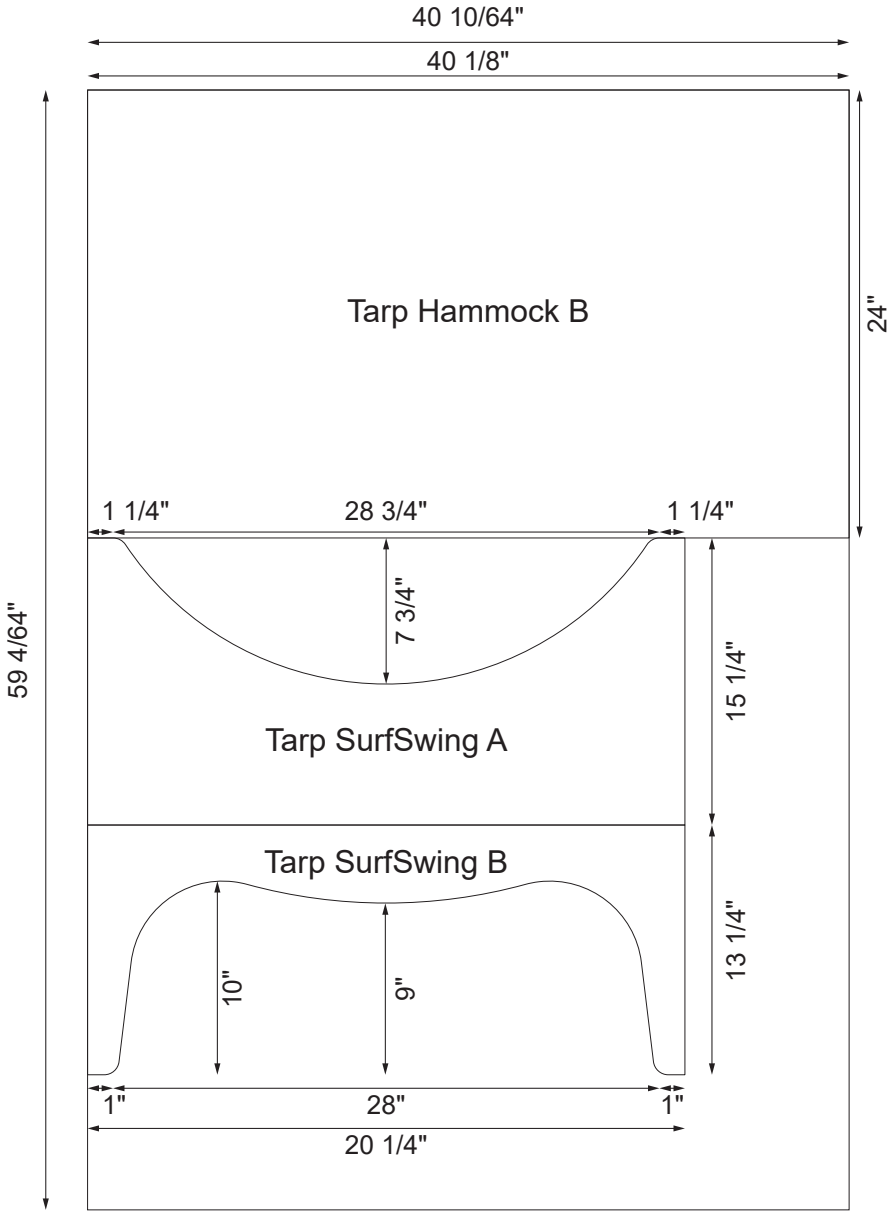

T Tarp cutting plan

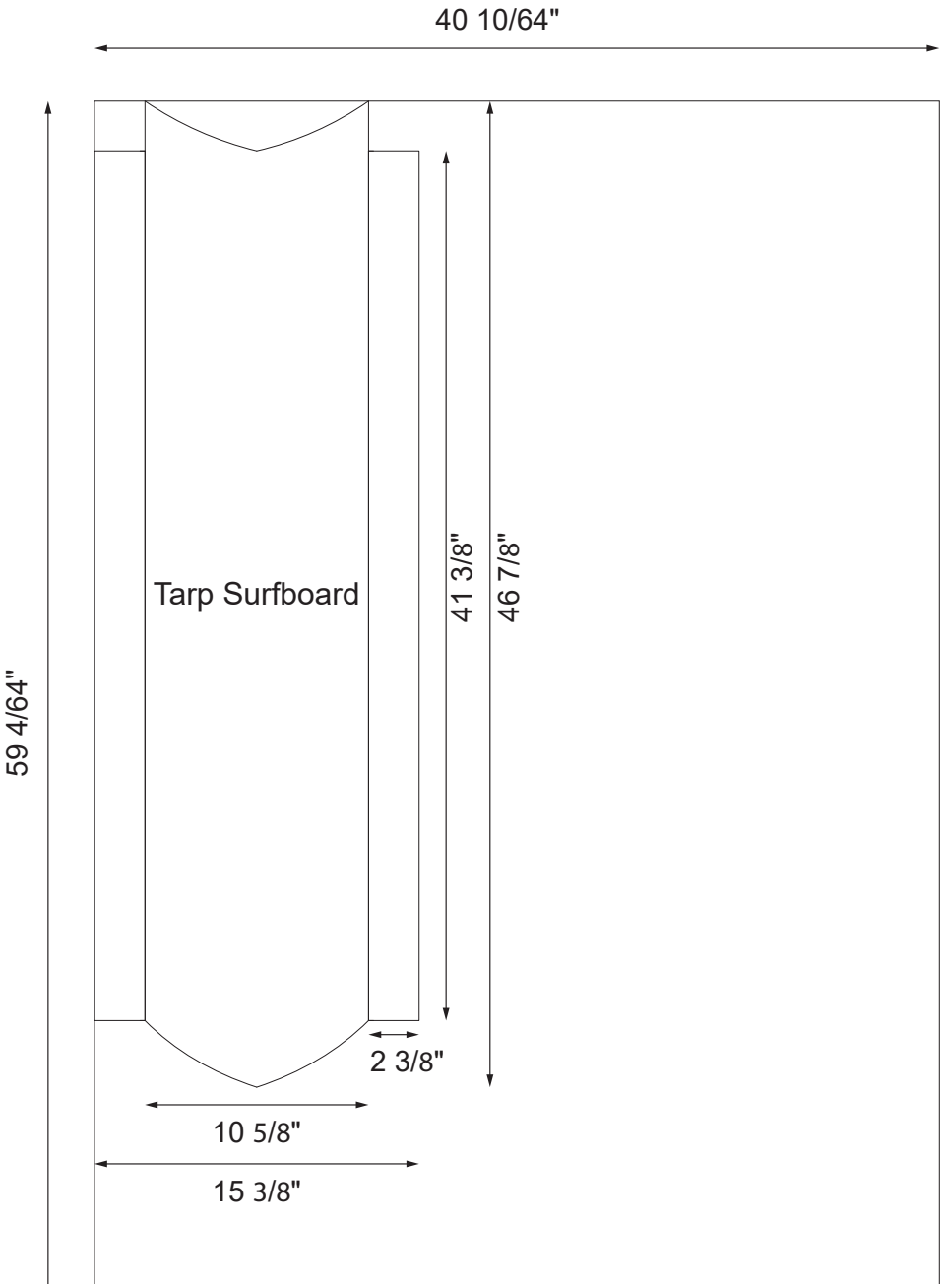

Swing frame connector	M10X40 Carriage Bolt	Nut M10	Washer M10	Cap
				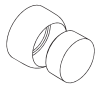
1x	1x	1x	1x	1x

1 Swing Connector

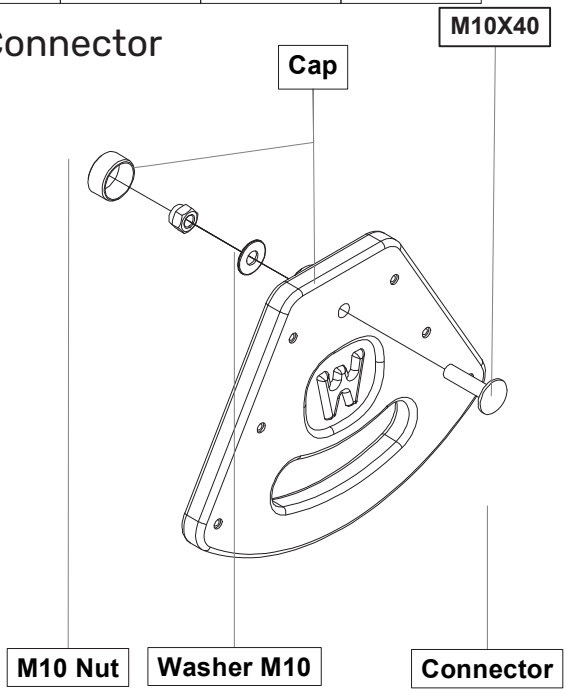

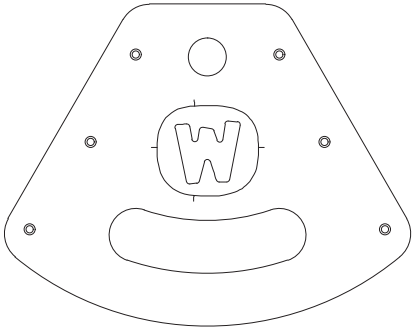

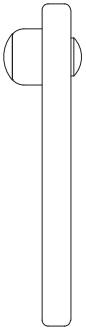

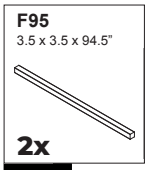

2 Swing Connector

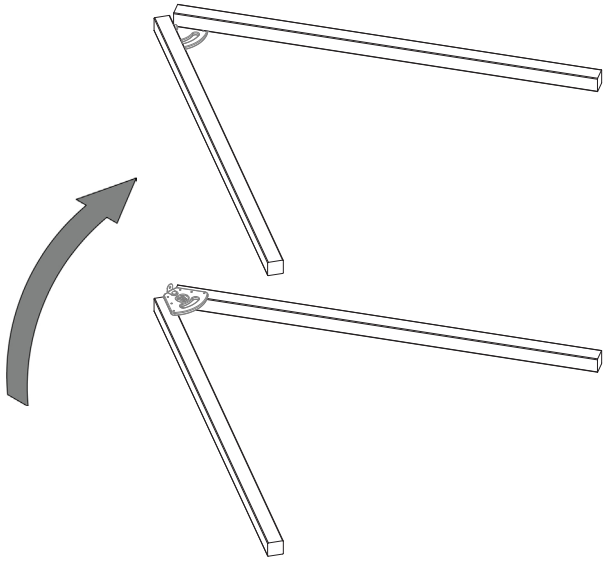

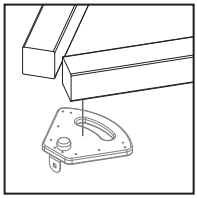

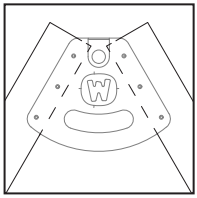

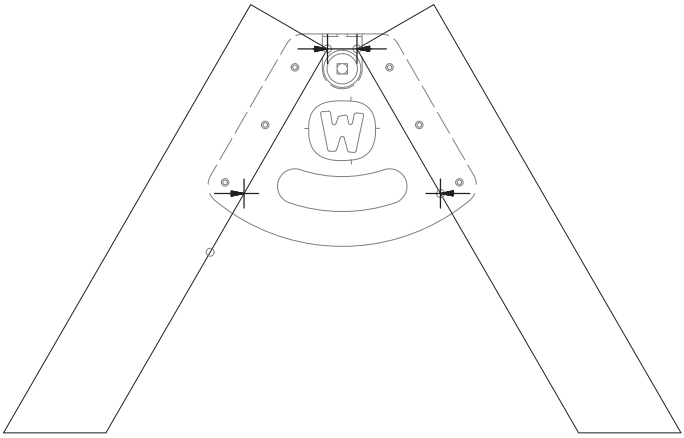

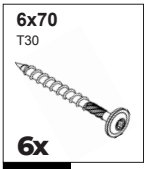

3 Swing Connector

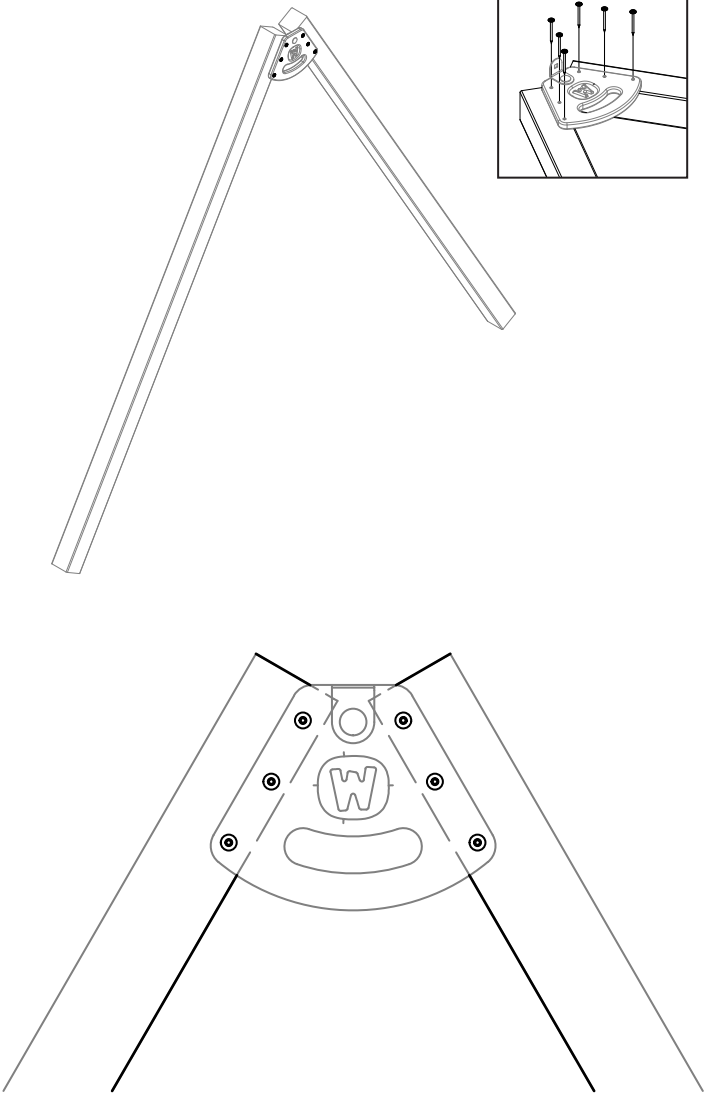

4

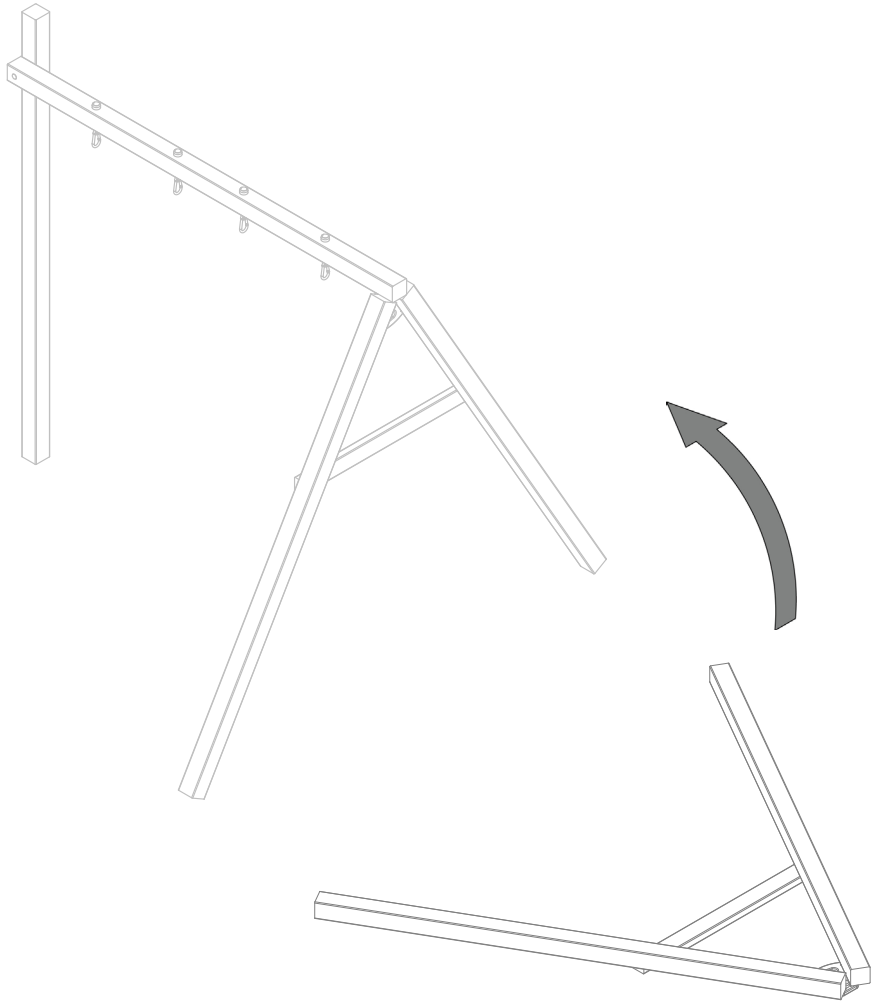

T32A	6x70
1.5 x 3.5 x 31.5"	T30
6x	24x

5

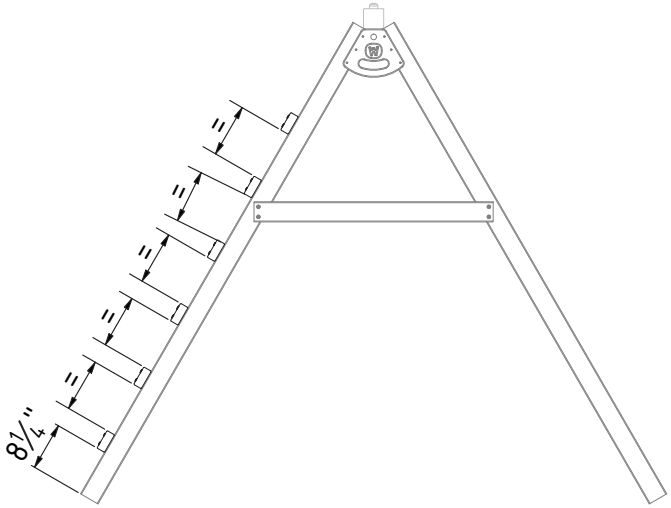

T32A	6x70
1.5 x 3.5 x 31.5"	T30
2x	8x

6

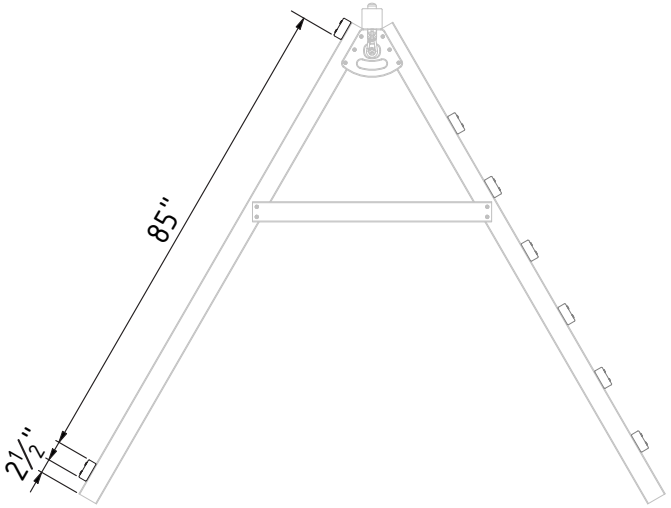

O42	T10	#8x2”
0.75 x 3.5 x 41.5”	1.5 x 3.5 x 9.5”	T20
3x	2x	12x

7 Surfswing

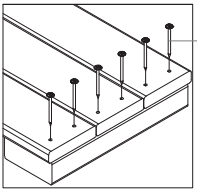

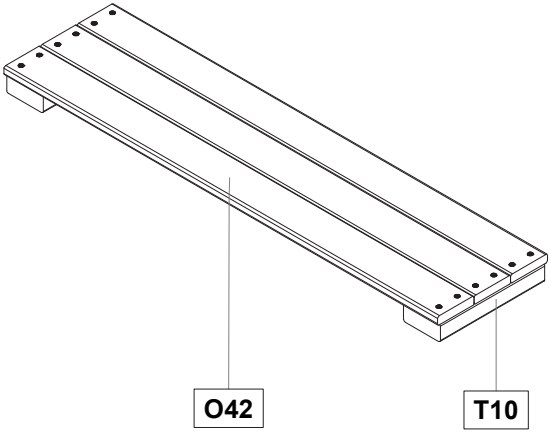

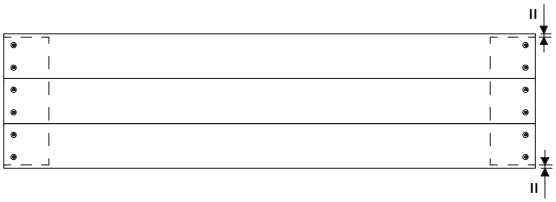

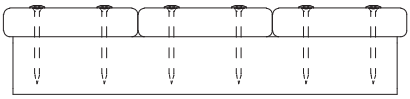

Tarp Surfboard	5x20	Washer
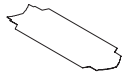	PZ 2	
1x	12x	12x

8

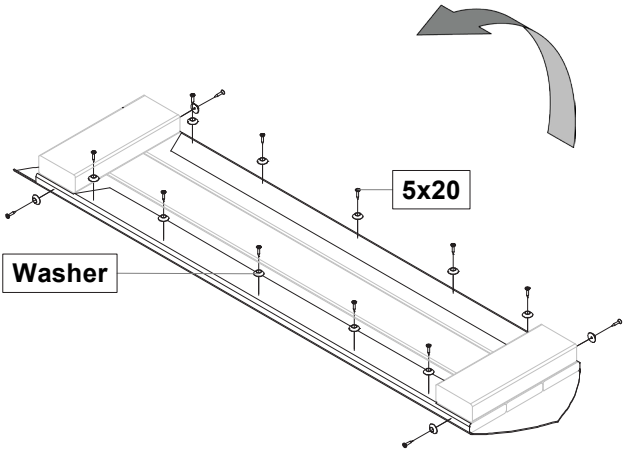

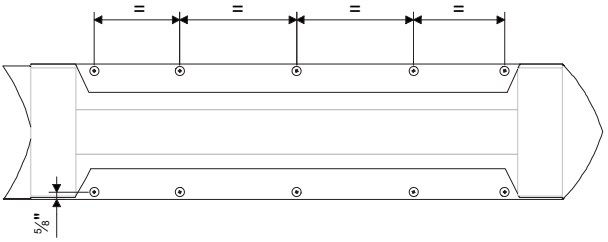

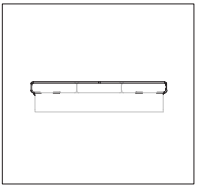

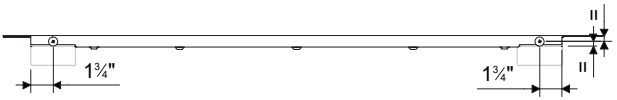

9

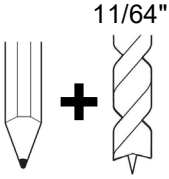

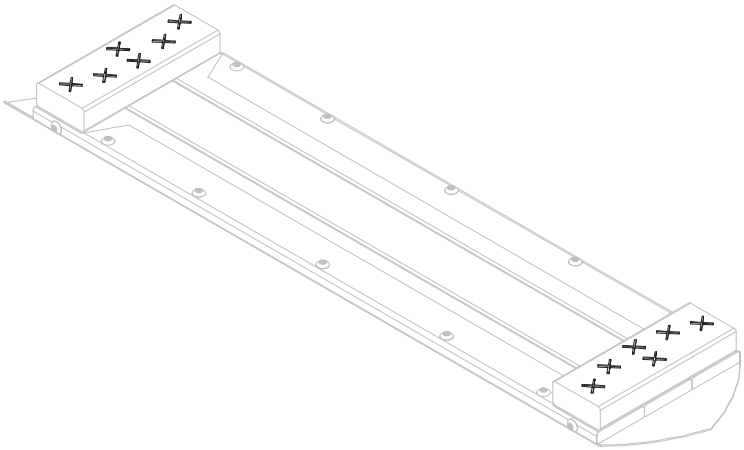

Surfstrap
cut to 134"

2x

10

2x

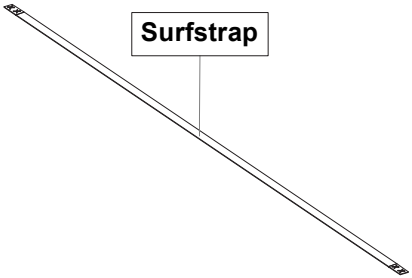

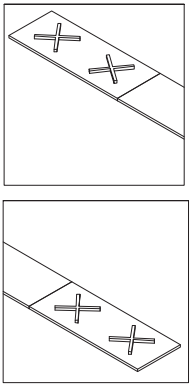

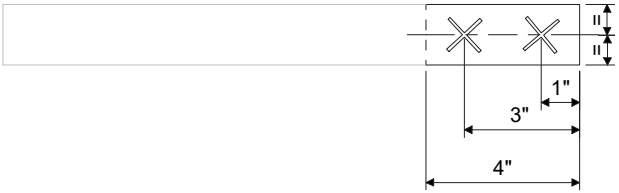

Restrictingband
cut to 33 1/2"

2x

11

2x

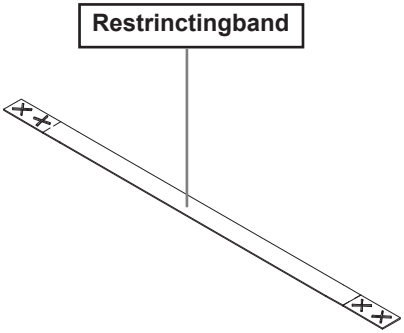

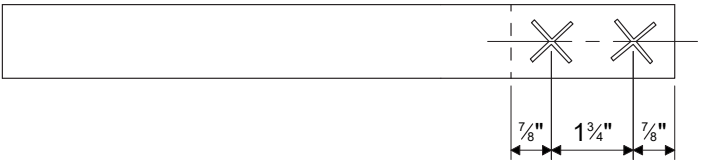

Surfstrap	Restrictingband	5x20	Washer
cut to 134”	cut to 33 1/2”	PZ 2	
2x	2x	8x	8x

12

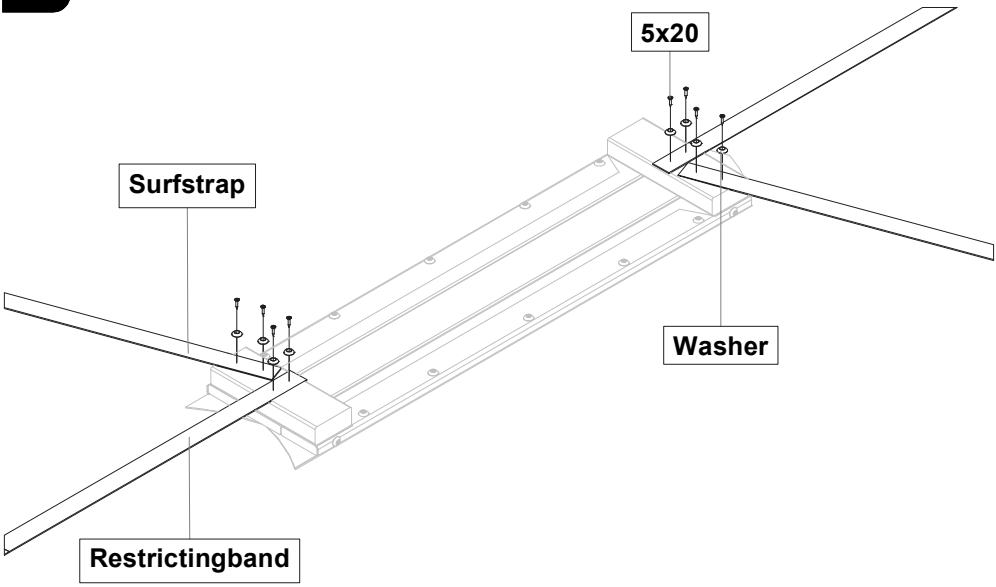

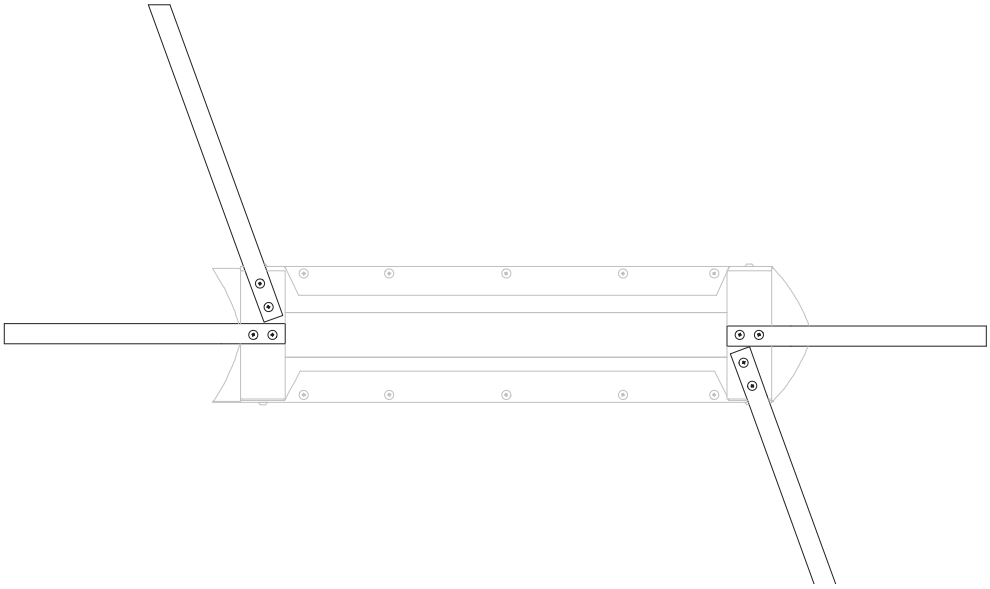

5x20 PZ 2 4x	Washer 4x

13

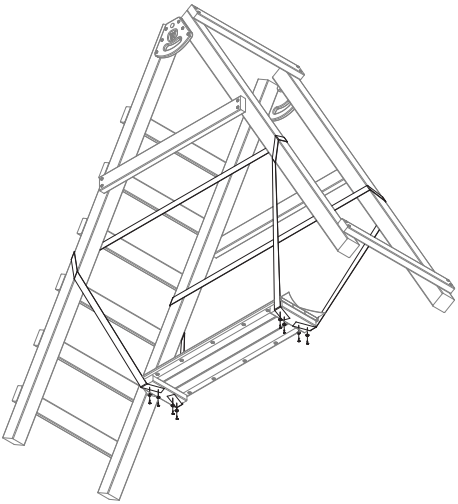

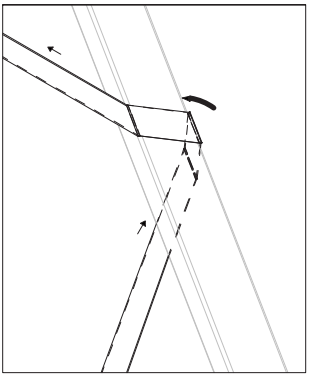

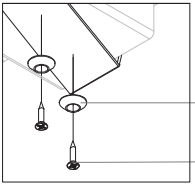

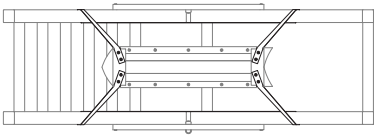

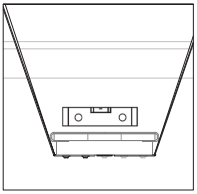

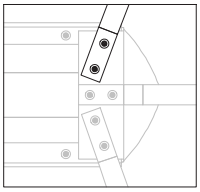

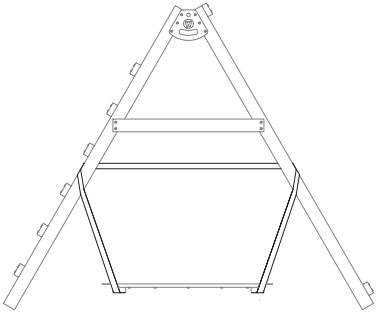

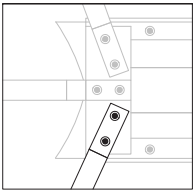

5x20 PZ 2	Washer
 12x	 12x

14

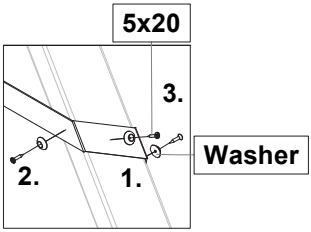

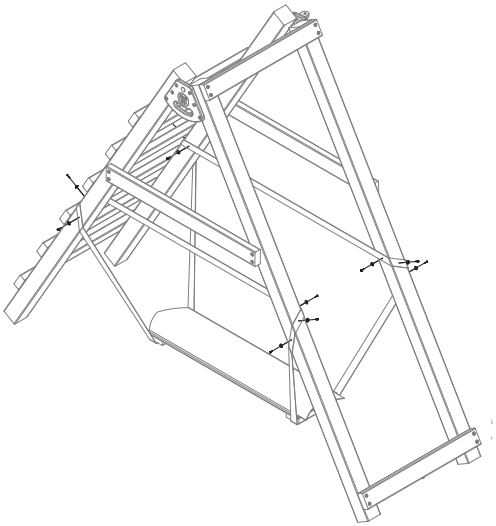

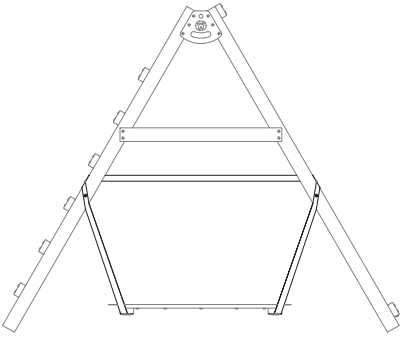

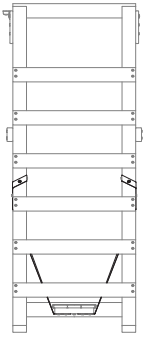

1.

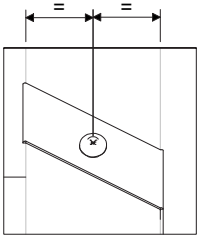

2.

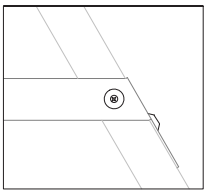

3.

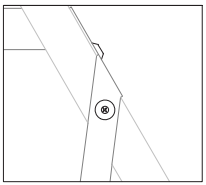

5x20 PZ 2 **6x**	Washer **6x**

15

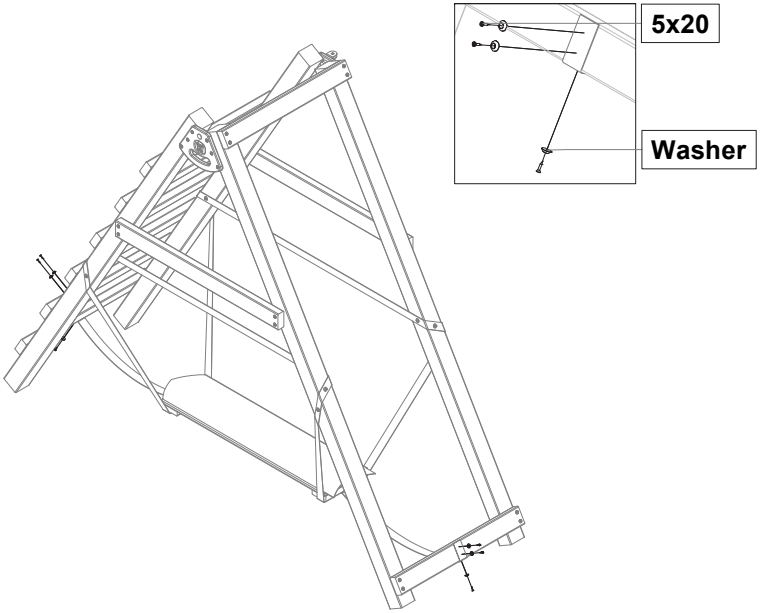

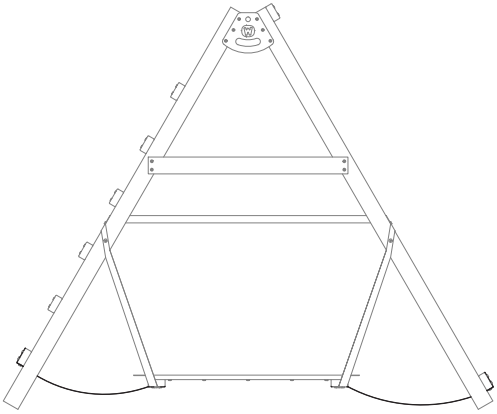

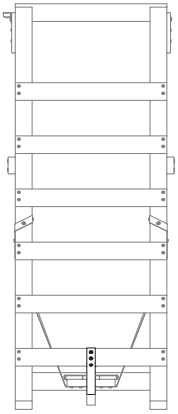

5x20 PZ 2	Washer	Tarp Hammock	Grips
		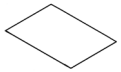	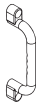
8x	**8x**	**1x**	**2x**

16

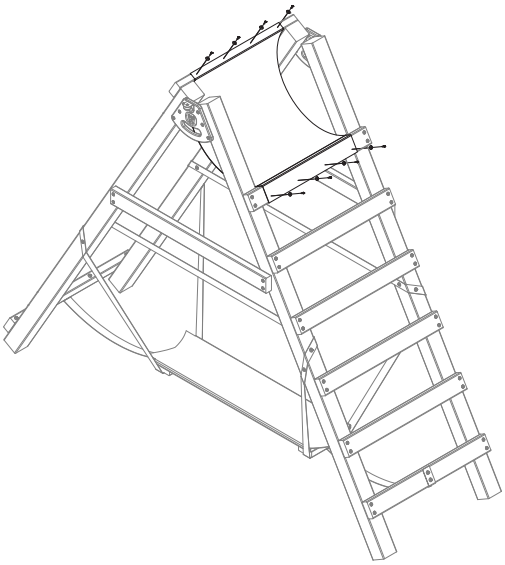

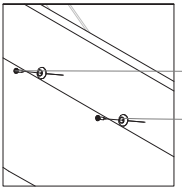

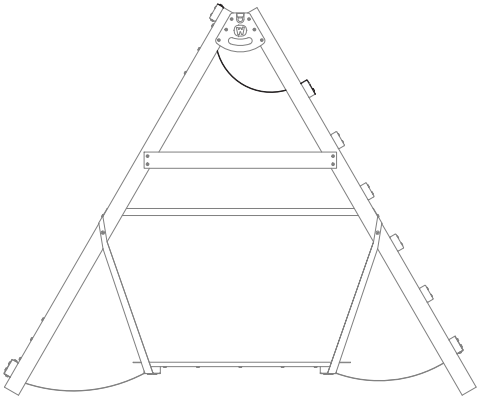

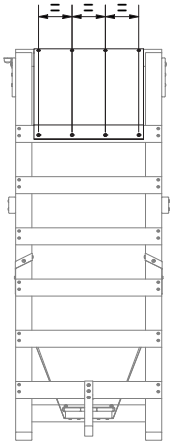

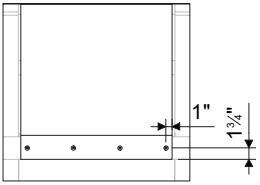

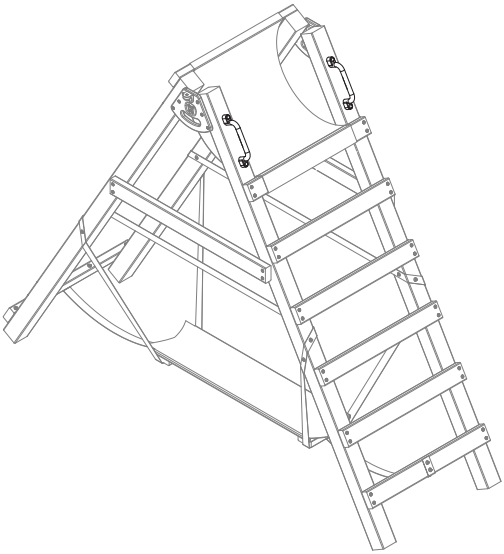

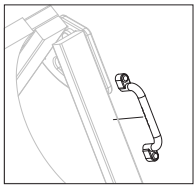

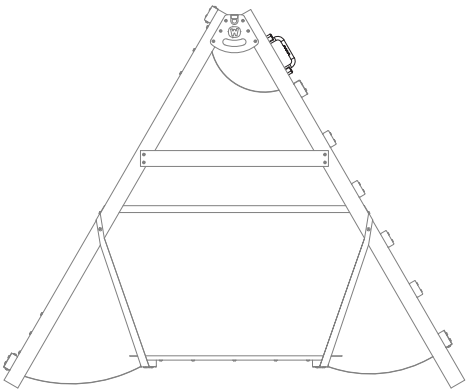

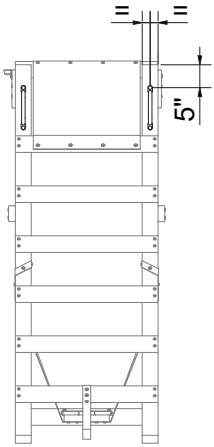
=
=
5"

5x20 PZ 2	Washer	Tarp Arch	Tarp Opening
 8x	 **8x**	 **1x**	 **1x**

18

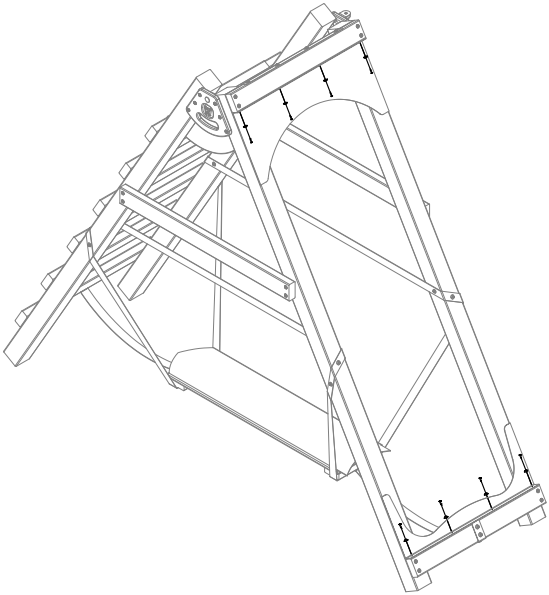

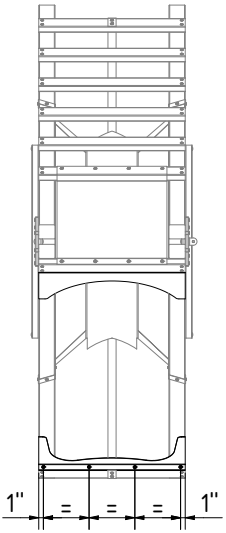

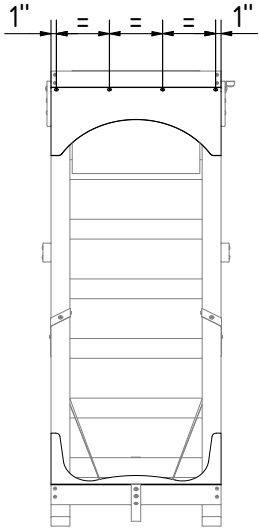

5x20 PZ 2	Washer
 12x	 **12x**

19

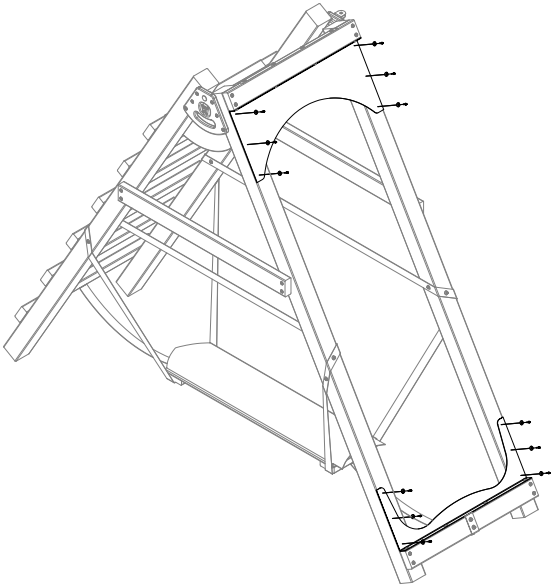

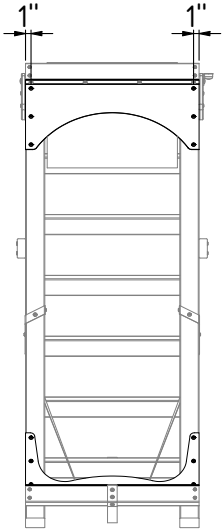

Notes

Inspection and Maintenance report

Date of inspection	Defect	Eliminated

Wickey Corporation
4001 Calhoun Ave Chattanooga, TN 37407

+17042471104
wickey.com

© WICKEY GmbH & Co.KG