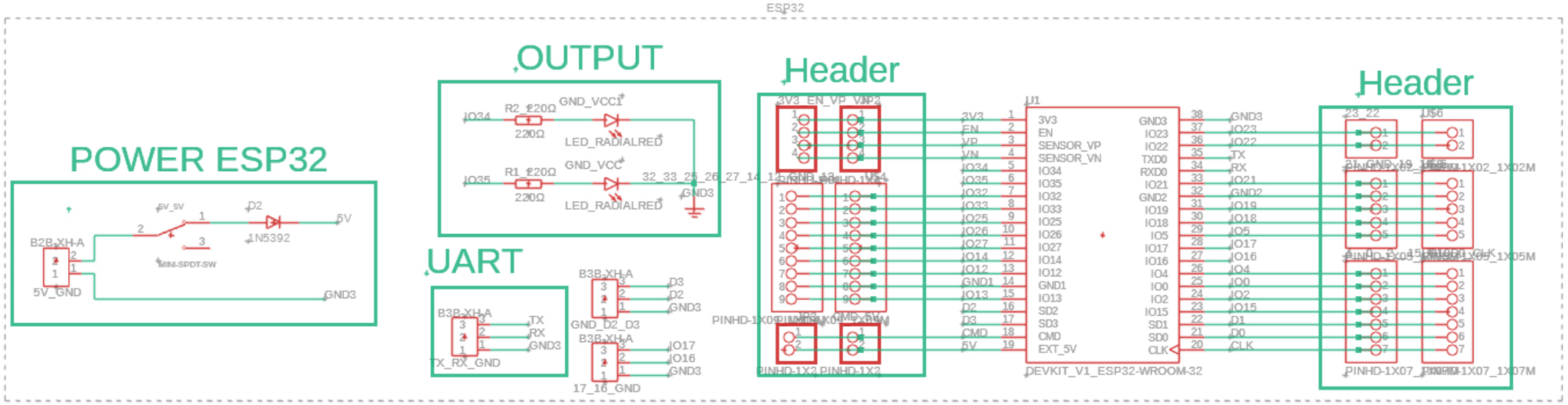
ESP32
POWER ESP32
B2B-XH-A
5V_GND
5V_5V
D2
1N5392
5V
MINI-SPDT-SW
GND3
OUTPUT
IO34
R2 220Ω
GND_VCC1
LED_RADIALRED
IO35
R1 220Ω
GND_VCC
32_33_25_26_27_14_12_13
GND3
UART
B3B-XH-A
TX
RX
GND3
TX_RX_GND
GND_D2_D3
D3
D2
17_16_GND
IO17
IO16
Header
3V3_EN_VP_VN
PINHD-1X4
PINHD-1X9
PINHD-1X2
3V3
EN
VP
VN
IO34
IO35
IO32
IO33
IO25
IO26
IO27
IO14
IO12
GND1
IO13
D2
D3
CMD
5V
U1
SENSOR_VP
SENSOR_VN
IO15
SD1
SD0
CLK
DEVKIT_V1_ESP32-WROOM-32
Header
23_22
21_GND_19
PINHD-1X02_1X02M
PINHD-1X05_1X05M
PINHD-1X07_1X07M

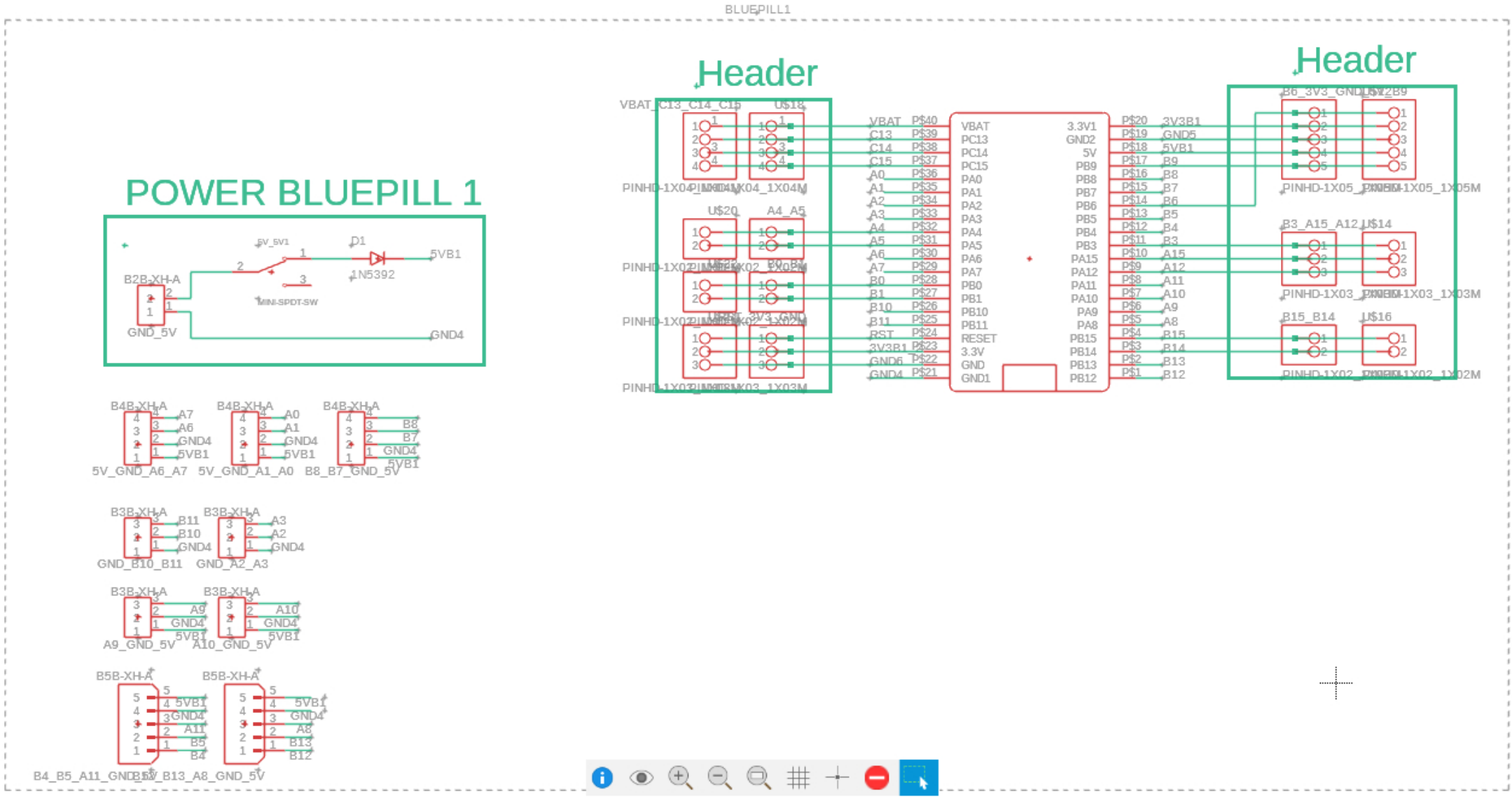
BLUEPILL1
Header
Header
POWER BLUEPILL 1
B2B-XH-A
GND_5V
5V_5V1
D1
1N5392
5VB1
GND4
MINI-SPDT-SW
B4B-XH-A
5V_GND_A6_A7
5V_GND_A1_A0
B8_B7_GND_5V
B3B-XH-A
GND_B10_B11
GND_A2_A3
A9_GND_5V
A10_GND_5V
B5B-XH-A
B4_B5_A11_GND_5V
B5V_B13_A8_GND_5V
VBAT
PC13
PC14
PC15
PA0
PA1
PA2
PA3
PA4
PA5
PA6
PA7
PB0
PB1
PB10
PB11
RESET
3.3V
GND
GND1
3.3V1
GND2
5V
PB9
PB8
PB7
PB6
PB5
PB4
PB3
PA15
PA12
PA11
PA10
PA9
PA8
PB15
PB14
PB13
PB12
B6_3V3_GND_5V
B3_A15_A12
B15_B14
U$18
U$20
U$14
U$16
PINHD-1X04_1X04M
PINHD-1X05_1X05M
PINHD-1X03_1X03M
PINHD-1X02_1X02M

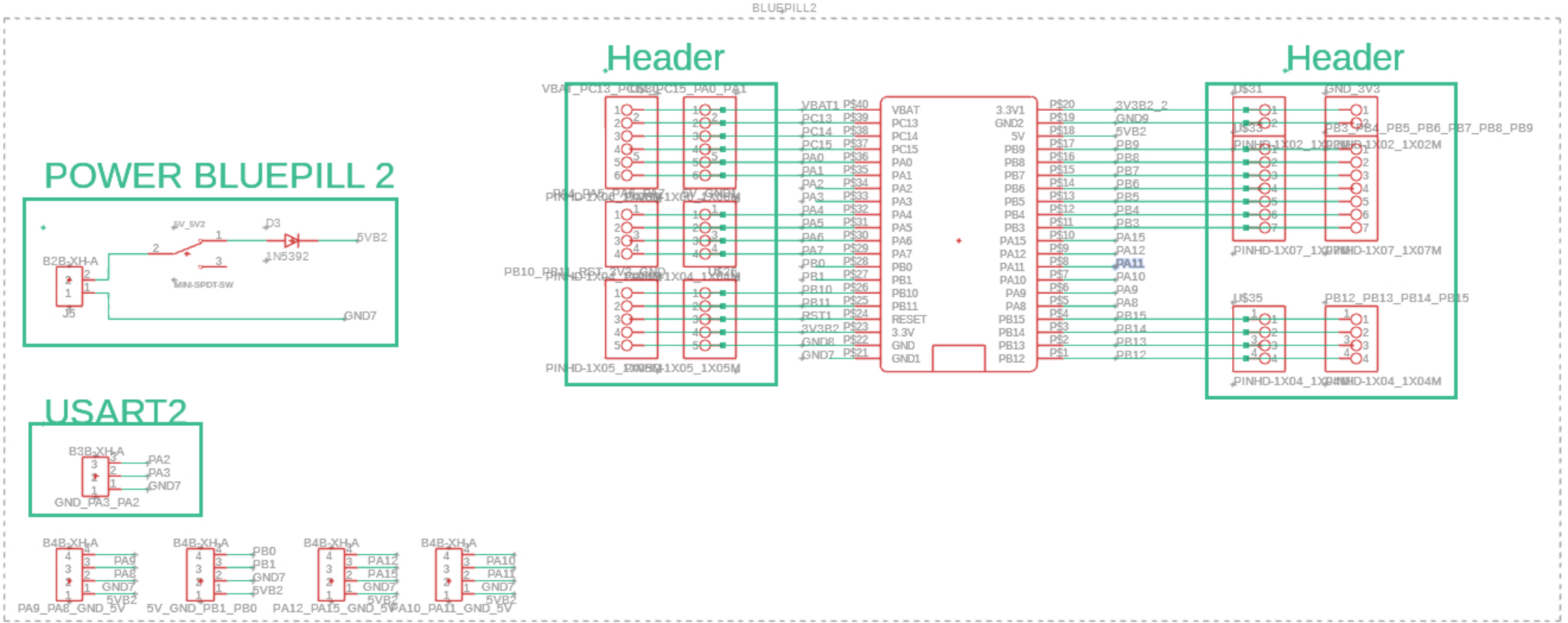
BLUEPILL2
Header
Header
POWER BLUEPILL 2
5V_5V2
D3
1N5392
5VB2
B2B-XH-A
MINI-SPDT-SW
J5
GND7
USART2
B3B-XH-A
PA2
PA3
GND7
GND_PA3_PA2
B4B-XH-A
PA9
PA8
GND7
5VB2
PA9_PA8_GND_5V
B4B-XH-A
PB0
PB1
GND7
5VB2
5V_GND_PB1_PB0
B4B-XH-A
PA12
PA15
GND7
5VB2
PA12_PA15_GND_5V
B4B-XH-A
PA10
PA11
GND7
5VB2
PA10_PA11_GND_5V
VBAT
PC13
PC14
PC15
PA0
PA1
PA2
PA3
PA4
PA5
PA6
PA7
PB0
PB1
PB10
PB11
RESET
3.3V
GND
GND1
3.3V1
GND2
5V
PB9
PB8
PB7
PB6
PB5
PB4
PB3
PA15
PA12
PA11
PA10
PA9
PA8
PB15
PB14
PB13
PB12
3V3B2_2
GND9
5VB2
PB9
PB8
PB7
PB6
PB5
PB4
PB3
PA15
PA12
PA11
PA10
PA9
PA8
PB15
PB14
PB13
PB12
GND_3V3
PB3_PB4_PB5_PB6_PB7_PB8_PB9
PB12_PB13_PB14_PB15

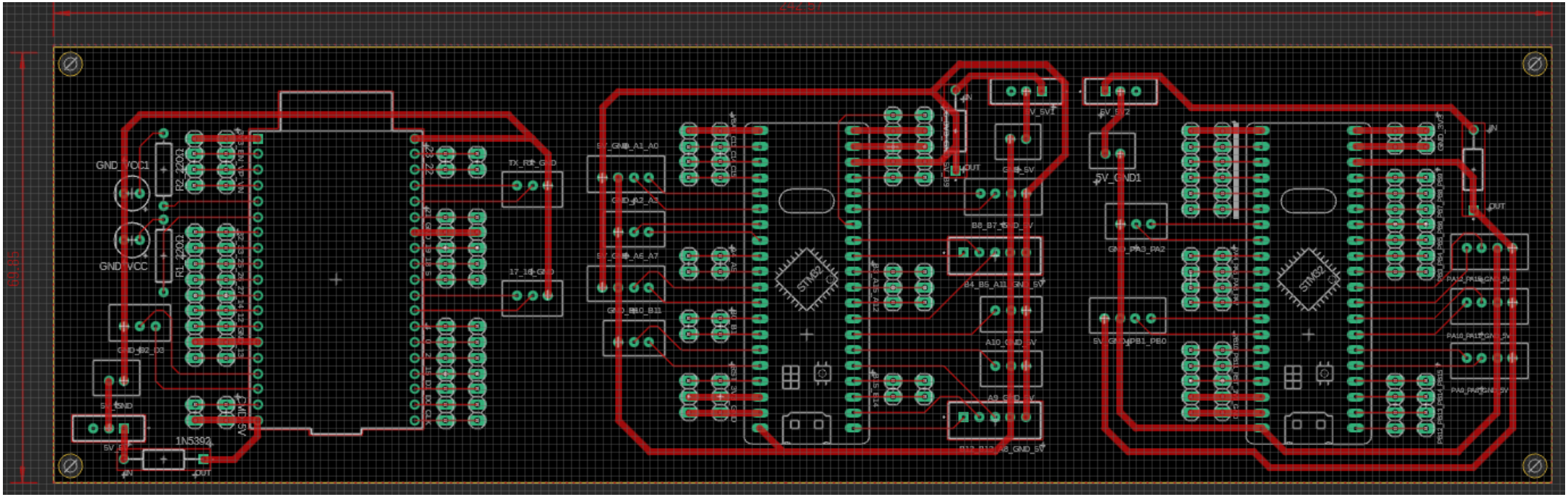
GND_VCC1
R2_220Ω
GND_VCC
R1_220Ω
1N5392
STM32

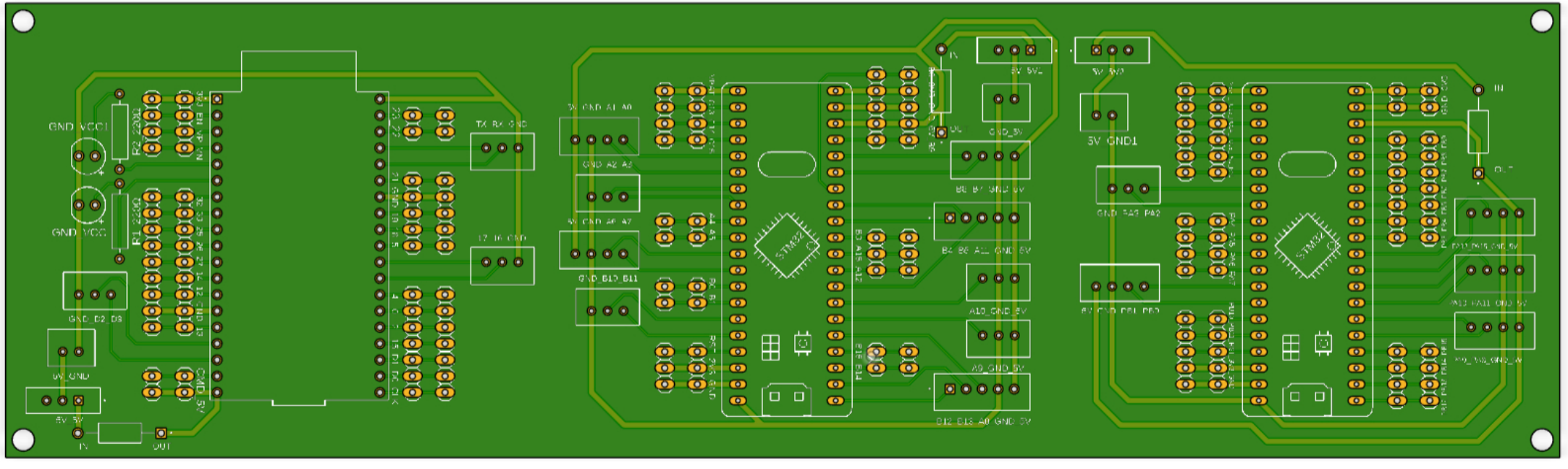
GND_VCC1
GND_VCC
R2_220Ω
R1_220Ω
GND_D2_D3
5V_GND
5V_5V
IN
OUT
TX_RX_GND
17_16_GND
5V_GND_A1_A0
GND_A2_A3
5V_GND_A6_A7
GND_B10_B11
STM32
B3_A15_A12
B15_B14
5V_5V1
GND_5V
B8_B7_GND_5V
B4_B6_A11_GND_5V
A10_GND_5V
A9_GND_5V
B12_B13_A0_GND_5V
5V_5V2
5V_GND1
GND_5A9_PA2
B7_GND_PB1_PB0
STM32
IN
OUT

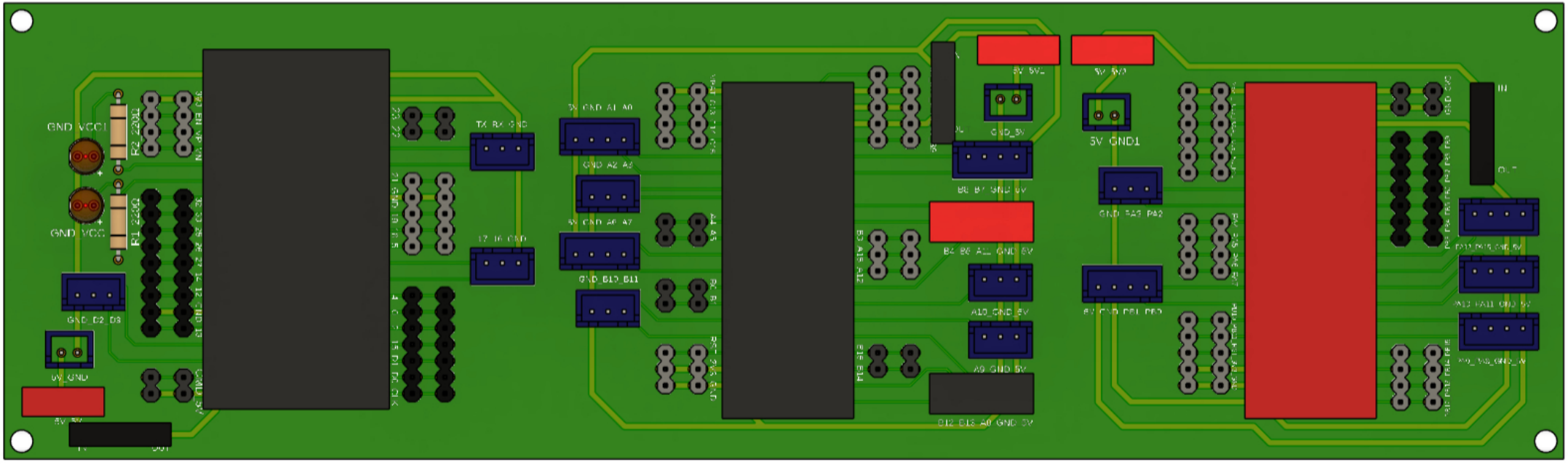
GND_VCC1
GND_VCC
R2_220Ω
R1_220Ω
GND_D2_D3
5V_GND
TX_RX_GND
5V_GND_A1_A0
GND_A2_A3
5V_GND_A6_A7
GND_B10_B11
5V_5V1
5V_5V2
GND_5V
5V_GND1
B8_B7_GND_5V
B4_B6_A11_GND_5V
A10_GND_5V
A9_GND_5V
B12_B13_A0_GND_5V
GND_5A3_PA2
5V_GND_PB1_PB2
IN
OUT