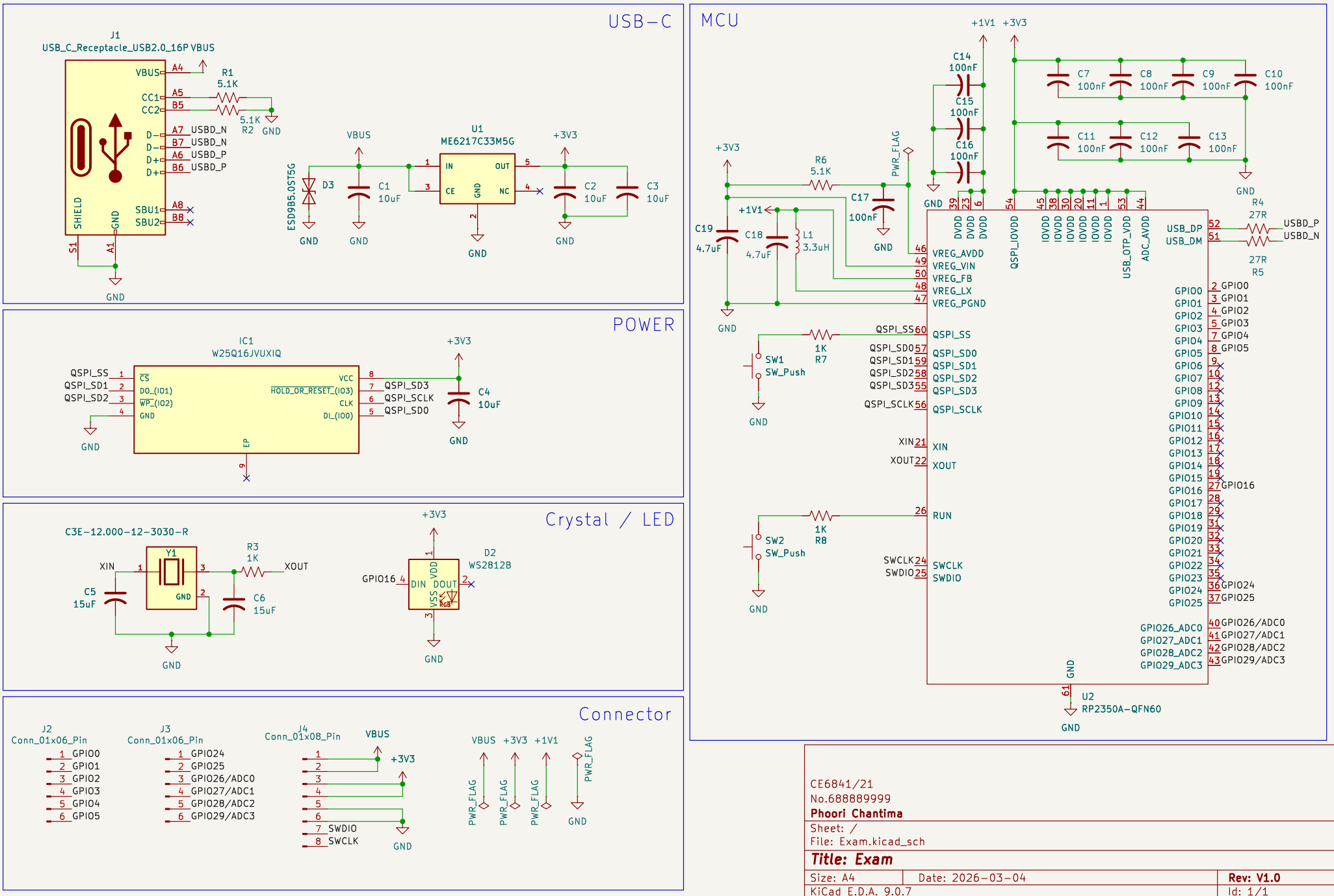
USB-C
J1
USB_C_Receptacle_USB2.0_16P
VBUS
CC1
CC2
D-
D-
D+
D+
SHIELD
GND
SBU1
SBU2
A4
A5
B5
A7 USBD_N
B7 USBD_N
A6 USBD_P
B6 USBD_P
A8
B8
S1
A1
R1
5.1K
5.1K
R2
GND
VBUS
ESD9B5.0ST5G
D3
C1
10uF
U1
ME6217C33M5G
IN
OUT
CE
GND
NC
+3V3
C2
10uF
C3
10uF
POWER
IC1
W25Q16JVUXIQ
QSPI_SS
QSPI_SD1
QSPI_SD2
CS
DO_(IO1)
WP_(IO2)
GND
VCC
HOLD_OR_RESET_(IO3)
CLK
DI_(IO0)
EP
QSPI_SD3
QSPI_SCLK
QSPI_SD0
+3V3
C4
10uF
Crystal / LED
C3E-12.000-12-3030-R
Y1
XIN
XOUT
GND
R3
1K
C5
15uF
C6
15uF
+3V3
GPIO16
DIN
DOUT
VDD
VSS
RGB
D2
WS2812B
Connector
J2
Conn_01x06_Pin
GPIO0
GPIO1
GPIO2
GPIO3
GPIO4
GPIO5
J3
Conn_01x06_Pin
GPIO24
GPIO25
GPIO26/ADC0
GPIO27/ADC1
GPIO28/ADC2
GPIO29/ADC3
J4
Conn_01x08_Pin
VBUS
+3V3
SWDIO
SWCLK
VBUS
+3V3
+1V1
PWR_FLAG
MCU
+1V1
+3V3
C14
100nF
C15
100nF
C16
100nF
C7
100nF
C8
100nF
C9
100nF
C10
100nF
C11
100nF
C12
100nF
C13
100nF
R6
5.1K
C17
100nF
C19
4.7uF
C18
4.7uF
L1
3.3uH
VREG_AVDD
VREG_VIN
VREG_FB
VREG_LX
VREG_PGND
QSPI_SS
QSPI_SD0
QSPI_SD1
QSPI_SD2
QSPI_SD3
QSPI_SCLK
XIN
XOUT
RUN
SWCLK
SWDIO
SW1
SW_Push
1K
R7
SW2
SW_Push
1K
R8
DVDD
QSPI_IOVDD
IOVDD
USB_OTP_VDD
ADC_AVDD
USB_DP
USB_DM
R4
27R
R5
27R
USBD_P
USBD_N
GPIO0
GPIO1
GPIO2
GPIO3
GPIO4
GPIO5
GPIO16
GPIO24
GPIO25
GPIO26_ADC0
GPIO27_ADC1
GPIO28_ADC2
GPIO29_ADC3
U2
RP2350A-QFN60
CE6841/21
No.688889999
Phoori Chantima
Sheet: /
File: Exam.kicad_sch
Title: Exam
Size: A4
Date: 2026-03-04
Rev: V1.0
KiCad E.D.A. 9.0.7
Id: 1/1