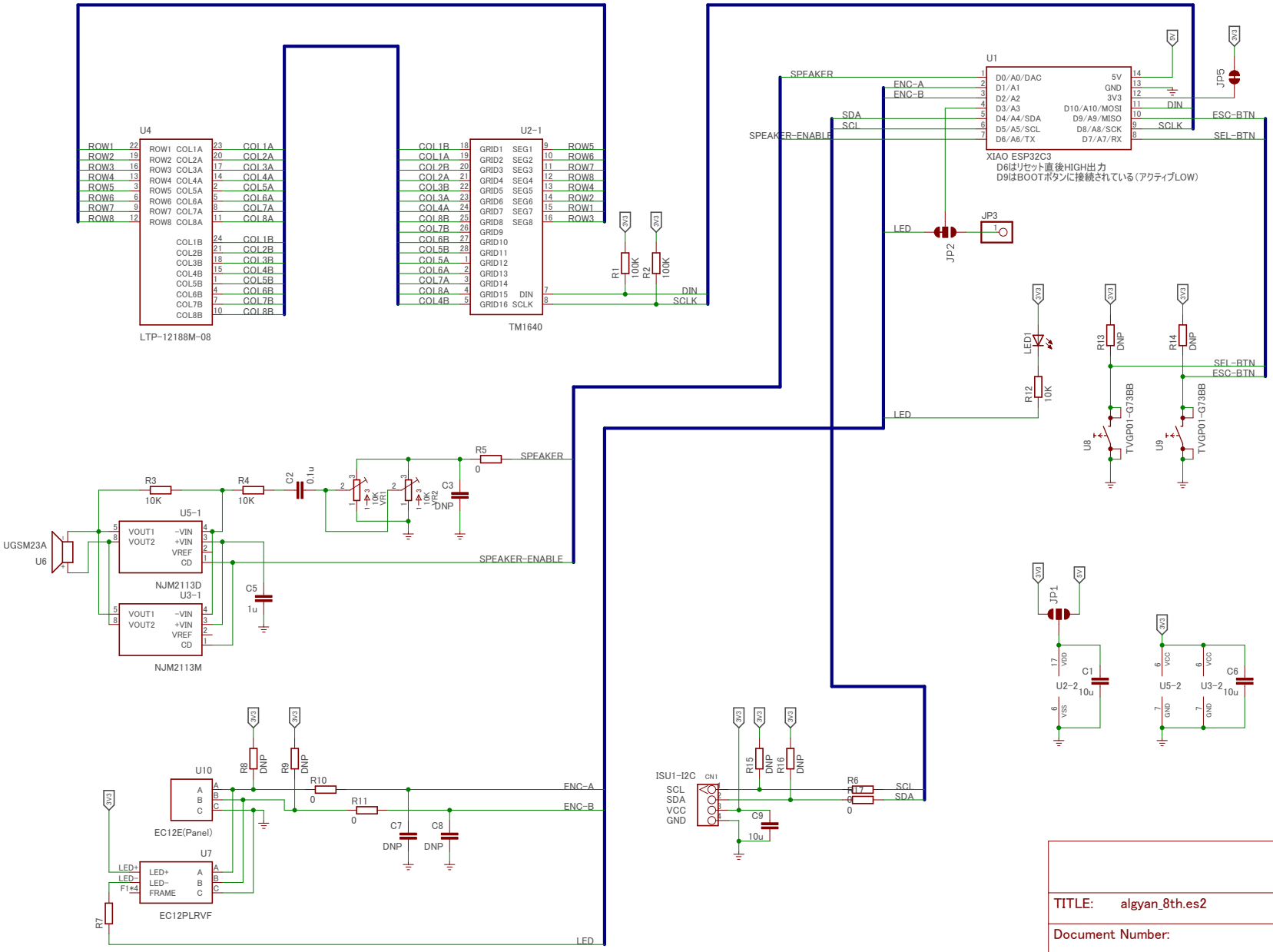

TITLE: algyan_8th.es2	
Document Number:	REV:
Date: 2023/01/07 16:02	Sheet: 1/1