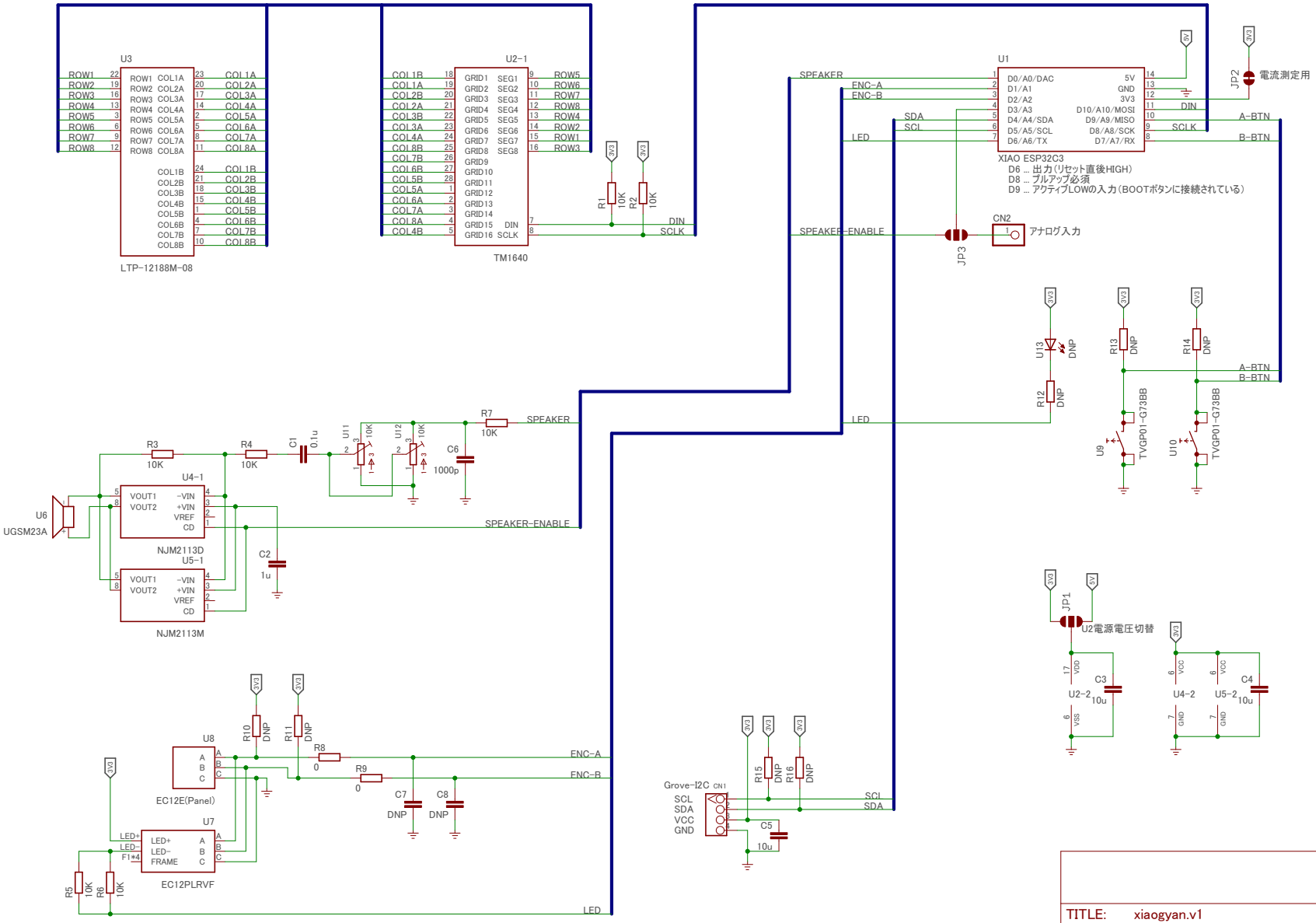

TITLE: xiaogyan.v1	
Document Number:	REV:
Date: 2023/04/26 10:23	Sheet: 1/1