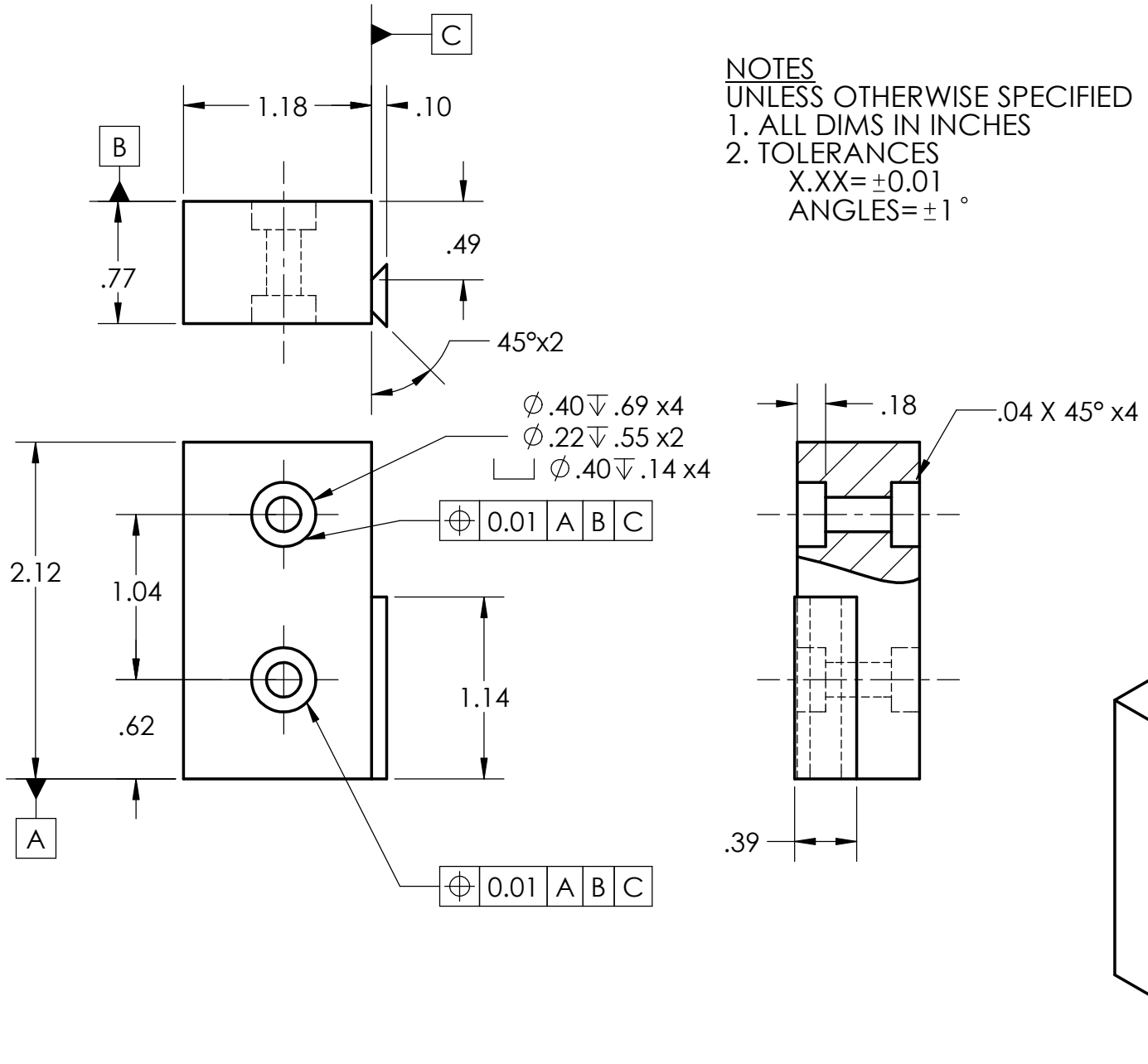

NOTES
UNLESS OTHERWISE SPECIFIED
1. ALL DIMS IN INCHES
2. TOLERANCES
X.XX= ±0.01
ANGLES= ±1 °

Cal Poly Mechanical Engineering ME 429 - Spring 2024	Lab Section:	Assignment #	Title: Depth Control Gear Structure		Drwn. By: Andrew Jwaideh
	Dwg. #:	Nxt Asb:	Date: 5/4/24	Scale: 1:1	Chkd. By: ME STAFF

SOLIDWORKS Educational Product. For Instructional Use Only.